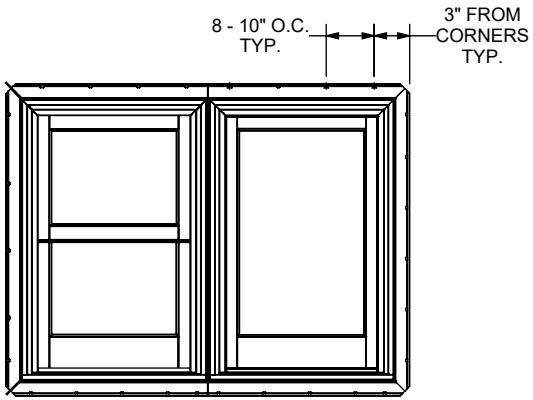

NAILING FIN METHOD

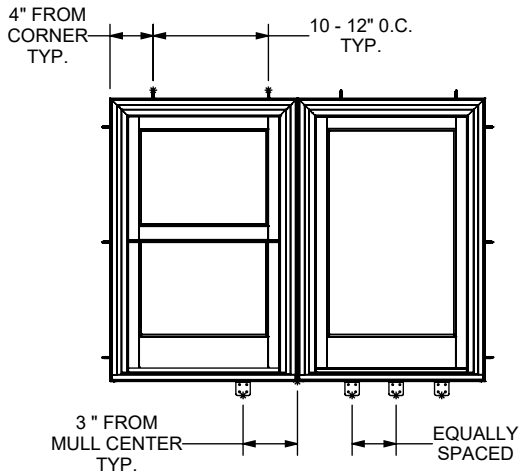

THRU JAMB METHOD

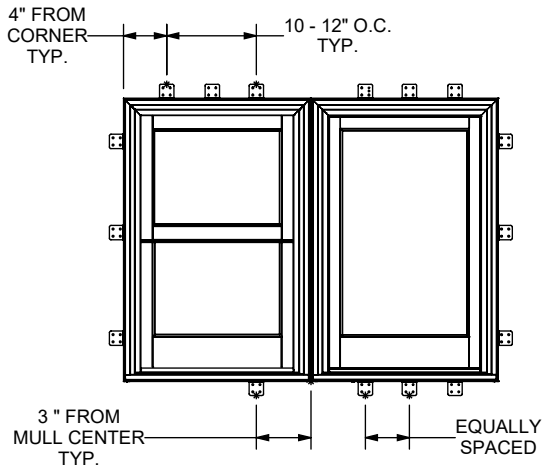

INSTALLATION CLIP METHOD

DESC.	FRAME SIZE		DAYLIGHT OPENING		DESIGN PRESSURE (psf)	FRAME MATERIAL
	WIDTH (IN.)	HEIGHT (IN.)	WIDTH (IN.)	HEIGHT (IN.)		
1108 DH PIC 2 WIDE	55.5	83.5	48.979	75.256	+55/-70	ALUM / WOOD
1109 DH PIC 2 WIDE	59.5	83.5	52.979	75.256	+55/-70	ALUM / WOOD
1104/1105 DH 2 WIDE	47.5	83.5	40.979	73.348 *TOTAL	+55/-70	ALUM / WOOD

Weather Shield

Windows & Doors

1104/1105 DH OPERATING AND 1108/1109 DH PICTURE COMBINATION INSTALLATION

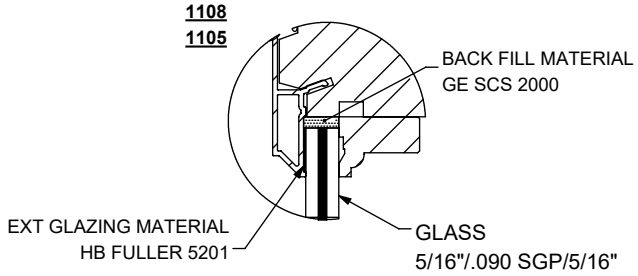

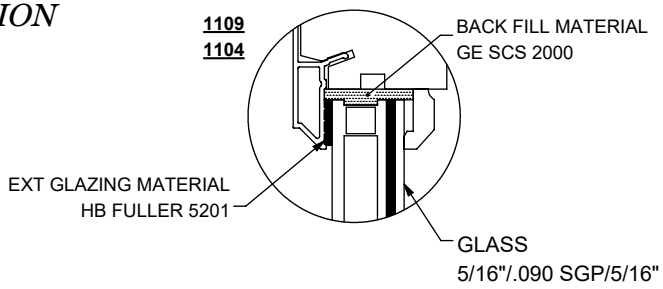

GENERAL NOTE(S):

1. THESE UNITS HAVE BEEN TESTED, ANALYZED, HALLMARK CERTIFIED AND FBC APPROVED.
2. GLASS MEETS THE REQUIREMENTS OF ASTM E1300.
3. SETTING BLOCK SHOULD BE 70-90 DUROMETER AS PER 2411.3.3.1 OF THE CURRENT FBC.
4. GLASS LITES THAT EXCEED 36" IN WIDTH SHALL USE SETTING BLOCKS AT ¼ SPAN FROM CORNERS AS PER 2411.3.3.1 OF THE CURRENT FBC.
5. LARGE AND SMALL MISSILE IMPACT RESISTANT. WINDOW AND DOOR UNITS REQUIRED TO MEET SMALL MISSILE IMPACT WIND-BORNE DEBRIS PROTECTION REQUIRE THE EXTERIOR LITE OF AN INSULATED UNIT TO BE TEMPERED PER FBC, SECTION 2411.3.3.7.

REV	DATE	DESCRIPTION	PCR NO.	ENG

TYP. WALL THICKNESS:
WT/FT: AREA:
MAT: FINISH:
PDR #: PROFILE #:

TOLERANCES UNLESS SPECIFIED:

INCHES	ANGLE
.x ± .1"	xx ± 1°
.xx ± .03"	xx.x ± .5° (1/2°)
.xxx ± .015"	xx.xx ± .25° (1/4°)

WEATHER SHIELD
WINDOWS & DOORS

PRODUCTS:
1104, 1105, 1108, 1109

DRAWN BY: MK
DATE: 8/13/2018
TITLE: DH OPER. & PICTURE COMBINATION INSTALLATION
DWG NO.: 45-18772
REV
SCALE: 1:12 SHEET NAME: Sheet1 SHEET 1 OF 2

DO NOT SCALE DRAWING

HEAD, SILL AND SIDE ANCHORAGE TYPICAL
NAIL FIN INSTALLATION

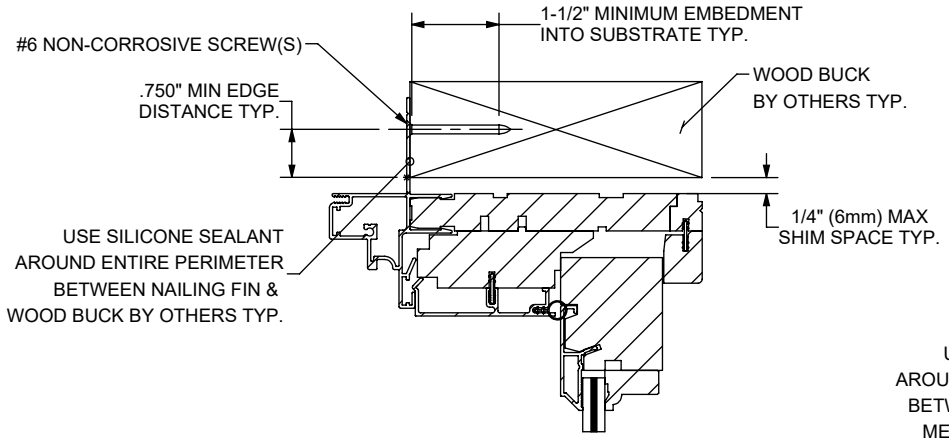

HEAD AND SIDE ANCHORAGE TYPICAL
THROUGH JAMB METHOD

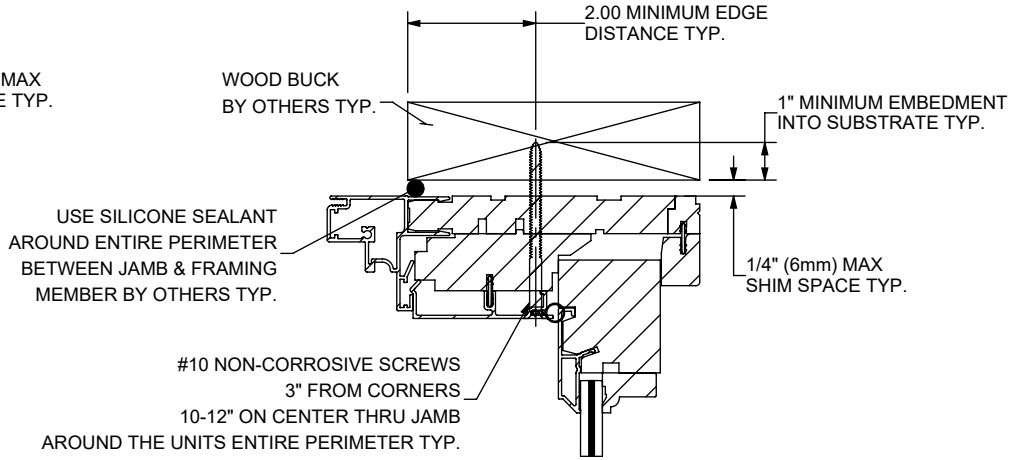

HEAD, SILL AND SIDE ANCHORAGE TYPICAL
INSTALLATION CLIP METHOD

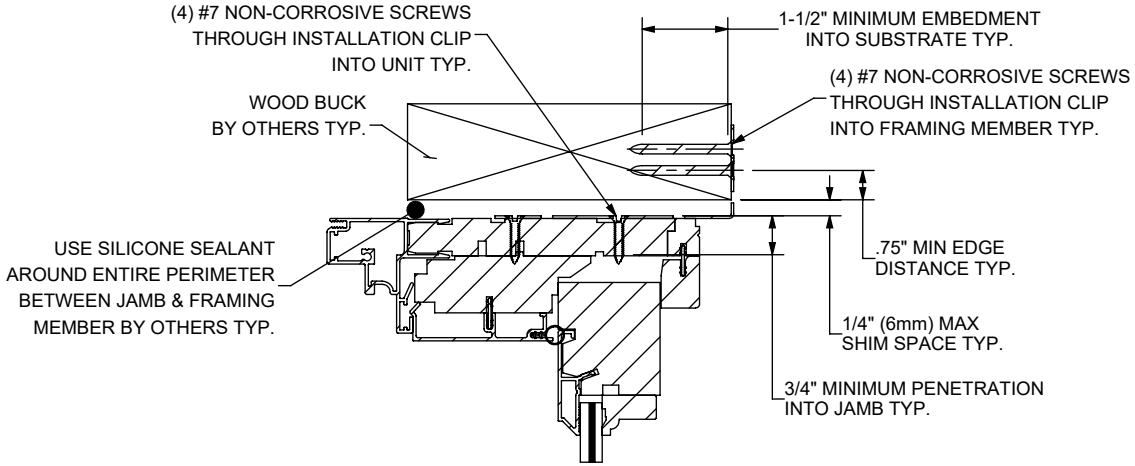

TOLERANCES UNLESS SPECIFIED:	
INCHES	ANGLE
.x ± .1"	xx ± 1°
.xx ± .03"	xx.x ± .5° (1/2°)
.xxx ± .015"	xx.xx ± .25° (1/4°)

WEATHER SHIELD®
WINDOWS & DOORS

PRODUCTS:
1104, 1105, 1108, 1109

REV	DATE	DESCRIPTION	PCR NO.	ENG

TYP. WALL THICKNESS:	
WT/FT:	AREA:
MAT:	FINISH:
PDR #:	PROFILE #:

DRAWN BY:	DATE:	TITLE:
MK	8/13/2018	DH OPER. & PICTURE COMBINATION INSTALLATION

DWG NO.: 45-18772 REV

SCALE : 1:12 SHEET NAME: Sheet2 SHEET 2 OF 2

DO NOT SCALE DRAWING