NEMO|etc.
Certificate of Authorization #32455
353 Christian Street, Unit #13
Oxford, CT 06478
(203) 262-9245

ENGINEER **TEST** **CONSULT**

P.E. EVALUATION REPORT (PEER)

Amrize Building Envelope LLC (Elevate UNA-Clad / GenFlex / Exceptional Metals)
26 Century Blvd
Nashville, TN 37214
(317) 572-4100

PEER-HSP-016.A.R8
FL2833-R11 (NON-HVHZ)
Date of Issuance: 04/24/2009
Revision 8: 06/08/2026

SCOPE:
This P.E. Evaluation Report (henceforth 'PEER') is issued under **F.A.C. Rule 61G20-3** and the applicable rules and regulations governing the use of construction materials in the State of Florida. The documentation submitted has been reviewed by Robert Nieminen, P.E. for compliance with the **8th Edition (2023) Florida Building Code** sections noted herein.

DESCRIPTION: Elevate UNA-CLAD™ / GenFlex UNA-CLAD™ / Exceptional Metals DefendEX Structural Metal Roof Systems

LABELING: Labeling shall be in accordance with the requirements of the Accredited Quality Assurance Agency noted herein.

CONTINUED COMPLIANCE: This PEER is valid until such time as the named product(s) changes, the referenced Quality Assurance or production facility location(s) changes, or Code provisions that relate to the product(s) change. Acceptance of our PEERs by the named client constitutes agreement to notify NEMO ETC, LLC of any changes to the product(s), the Quality Assurance, or the production facility location(s). NEMO ETC, LLC requires a complete review of its PEER relative to updated Code requirements with each Code Cycle. Reference is made to the NEMO|etc. Directory of P.E. Evaluations to ascertain the status and/or current version of this PEER. If the PEER is not listed at the Nemo Directory, then it is no longer valid.

ADVERTISEMENT: "NEMO P.E. Evaluated" may be displayed in advertising literature. If any portion of the PEER is displayed, then it shall be in its entirety.

INSPECTION: Upon request, a copy of this entire PEER shall be provided to the user by the manufacturer or its distributors and shall be available for inspection at the job site at the request of the Building Official.

This PEER consists of pages 1 through 3, plus a 2-page Appendix.

Prepared by:

Digitally signed by Robert Nieminen
Date: 2026.06.09 '11:12:48 -04'00

This item has been digitally signed and sealed by Robert Nieminen, P.E.
Printed copies of this document are not considered signed and sealed, and the signature must be verified on any electronic copies.
Robert Nieminen, Florida P.E. 59166, FBC ANE1983
NEMO ETC, LLC, Florida CA #32455

ROBERT NIEMINEN
LICENSE
NO. 59166
STATE OF FLORIDA
PROFESSIONAL ENGINEER

CERTIFICATION OF INDEPENDENCE:

1. NEMO ETC, LLC does not have, nor does it intend to acquire or will it acquire, a financial interest in any company manufacturing or distributing products it evaluates.
2. NEMO ETC, LLC is not owned, operated or controlled by any company manufacturing or distributing products it evaluates.
3. Robert Nieminen, P.E. does not have nor will acquire, a financial interest in any company manufacturing or distributing products for which the PEERs are being issued.
4. Robert Nieminen, P.E. does not have, nor will acquire, a financial interest in any other entity involved in the approval process of the product.
5. This is a building code evaluation. Neither NEMO ETC, LLC nor Robert Nieminen, P.E. are, in any way, the Designer of Record for any project on which this PEER, or previous versions thereof, is/was used for permitting or design guidance unless retained specifically for that purpose.

©2019 NEMO ETC, LLC

#023 RC NON-HVHZ

STRUCTURAL COMPONENTS – ROOF DECK EVALUATION:

1. SCOPE:

Product Category: Structural Components
Sub-Category: Roof Deck
Product Approval Method: Method 1, Option D: Codified Material, Evaluation by Engineer
Compliance Statement: Elevate UNA-CLAD™ / GenFlex UNA-CLAD™ / Exceptional Metals DefendEX Structural Metal Roof Systems, as produced by **Amrize Building Envelope LLC (Elevate UNA-Clad / GenFlex / Exceptional Metals)**, have demonstrated compliance with the following sections of the **8th Edition (2023) Florida Building Code** through testing in accordance with the following Standards. Compliance is subject to the Installation Requirements and Limitations of Use set forth herein.

2. STANDARDS:

SECTION	PROPERTY	STANDARD
1504.3.2	Wind resistance	UL 580
1504.3.2	Wind resistance	ASTM E1592

3. REFERENCES:

ENTITY	EXAMINATION	REFERENCE	DATE
Farabaugh (TST1654)	ASTM E1592	T241-99	12/23/1999
Farabaugh (TST1654)	ASTM E1592	T242-99	12/27/1999
Farabaugh (TST1654)	ASTM E1592	T273-02	08/15/2002
UL (TST1740)	UL 580	00NK35592	12/03/2001
UL (TST1740)	UL 580	01NK33240	01/04/2002
UL (TST1740)	UL 580	TGKX.571	02/08/2006
UL (TST1740)	UL 580	TGKX.571A	02/08/2006
NEMO	Traceability	PCL GNFX	06/05/2026
NEMO	Traceability	PCL EXMT	06/05/2026
UL LLC (QUA9625)	Quality Control	Service confirmation	10/16/2025
UL LLC (QUA9625)	Quality Control	Florida BCIC	Current

4. PRODUCT DESCRIPTION:

4.1 The following structural metal roof panels are mechanically attached to Approved substrate, as outlined in the Limitations / Conditions of Use herein.

Elevate UNA-CLAD™ UC-6 Double-Lock Standing Seam is a factory formed, standing seam metal roof panel with a 2" high vertical seam attached with concealed clips. This report covers 24 to 22 gauge steel or 16 to 18-inch width and 0.032 to 0.040-inch aluminum panels of 16-inch width.

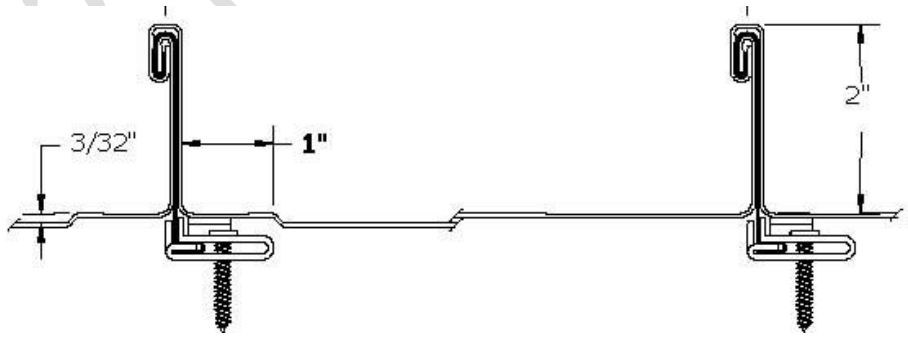

4.2 The following panels are interchangeable within the scope of this PEER:

TABLE 1: ACCEPTABLE ALTERNATES		
LISTED PANEL	ALTERNATES	
	GENFLEX	EXCEPTIONAL METALS
Elevate UNA-CLAD™ UC-6	GenFlex UNA-CLAD™ UC-6	DefendEX-SS2000

5. LIMITATIONS:

5.1 This is a building code evaluation. Neither NEMO ETC, LLC nor Robert Nieminen, P.E. are, in any way, the Designer of Record for any project on which this PEER, or previous versions thereof, is/was used for permitting or design guidance. PEERs are not to be construed as representing any attributes not specifically listed, nor are PEERs to be construed as an endorsement of the subject, or a recommendation for its use. There is no warranty by NEMO ETC, LLC or Robert Nieminen, P.E., express or implied, as to any finding or other matter in this PEER, or as to any product covered by the PEER.

5.2 This PEER is not for use in FBC High Velocity Hurricane Zone jurisdictions, as defined in FBC Chapter 2 (Broward and Miami-Dade Counties).

5.3 This PEER pertains to the roof panel and its connecting clips.

5.4 This PEER does not include evaluation of fire classification. Refer to **FBC 1505** or **R902** for requirements and limitations regarding roof assembly fire classification. Refer to **FBC 2603** for requirements and limitations concerning the use of foam plastic insulation.

5.5 This PEER does not include evaluation of roof edge termination.

5.6 Refer to **FBC 1511** or **R908** for requirements and limitations regarding recover installations.

5.7 Refer to Appendix 1 for span / wind load limitations.

5.7.1 Allowable pressure is the result of testing for wind load resistance based on allowable wind loads. Refer to **FBC 1609** for determination of design wind loads.

5.7.2 This PEER pertains to the roof panel and its connecting clips. The design professional shall determine the appropriate roof cladding design pressure requirements for comparison to the allowable pressures listed in Appendix 1, and shall analyze the panel fasteners for pullout and pullover for use atop the specified structural elements. The structural framing shall be verified by the Authority Having Jurisdiction.

5.8 Minimum slope shall not be less than that set forth in **FBC 1507.4.2** and **Amrize Building Envelope LLC (Elevate UNA-Clad / GenFlex / Exceptional Metals)** minimum requirements.

5.9 Coil metal used to produce the panels shall comply with **FBC 1507.4.3** and **R905.10.3**.

5.10 All components in the roof assembly shall have quality assurance audit in accordance with **F.A.C. Rule 61G20-3**. Refer to the Product Approval of the component manufacturer for components listed in Appendix 1 that are produced by a Product Manufacturer other than the report holder on Page 1 of this PEER.

6. INSTALLATION:

Elevate UNA-CLAD™ Structural Metal Roofing Systems shall be installed in accordance with **Amrize Building Envelope LLC (Elevate UNA-Clad / GenFlex / Exceptional Metals)** published installation instructions, subject to the Limitations of Use noted herein.

7. BUILDING PERMIT REQUIREMENTS:

As required by the Building Official or Authority Having Jurisdiction in order to properly evaluate the installation of this product.

8. MANUFACTURING PLANTS:

Anoka, MN

9. QUALITY ASSURANCE ENTITY:

UL, LLC – QUA9625: (360) 817-5512; bsai.inspections@ul.com

- THE TWO (2) PAGES THAT FOLLOW FORM PART OF THIS PEER -

©NEMO ETC, LLC

ELEVATE UNA-CLAD™ UC-6 DOUBLE-LOCK STANDING SEAM – ALUMINUM OR STEEL	
SLOPE RANGE:	3:12 or greater
PURLINS:	(By Others) meeting the structural requirements of the project
INSULATION:	(Optional) Any compressible blanket insulation, 6 in. max. thickness before compression, or foamed plastic (rigid insulation), 1 to 4 in thick.
METAL PANELS:	0.032 or 0.040-inch aluminum panels, max. 16-inch wide with 2-inch high seams. Panels shall be continuous over two or more spans. Panels seamed with electric or hand seamer to 180°. A bead of sealant may be used at ribs. or 24 or 22 ga steel, max. 18-inch wide with 2-inch high seams. Panels shall be continuous over two or more spans. Panels seamed with electric or hand seamer to 180°. A bead of sealant may be used at ribs 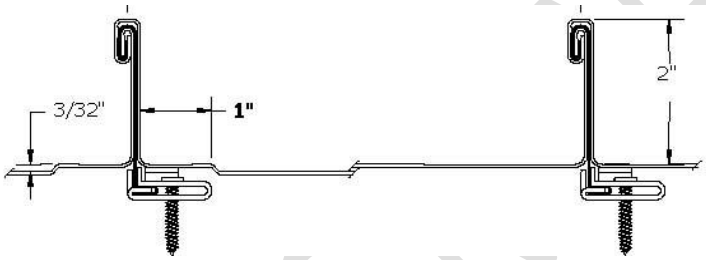
CLIPS:	UC-6 Low Float Clips: Base 2 in. long, 1 in. wide fabricated from No. 16 ga. coated steel and an interlocking upper tab 4-5/16 in wide, 3-3/8 in. long, fabricated from No. 22 ga. coated steel. Two ¼-in. guide holes located in the base 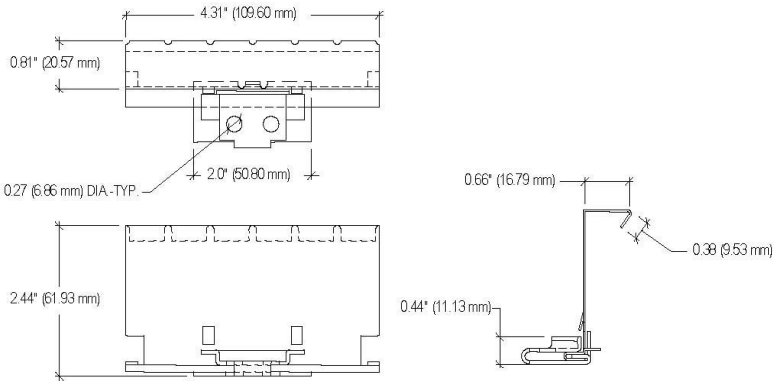
FASTENERS:	Two ¼-14 x min. 7/8-inch long self-drilling, hex-washer-head, plated steel screws per clip.
LOAD / SPAN LIMITATIONS:	See load/span tables that follow Allowable Pressure is the result of testing for wind load resistance based on allowable wind loads. Refer to FBC 1609 for determination of design wind pressures

©NEMO ETC, LLC

Table 1: Span / Allowable Wind Uplift Pressure Tables (psf) Elevate UNA-CLAD™ UC-6 (Aluminum)						
Panel Width (inch)	Thickness (inch)	Span (ft)				
		1	2	3	4	5
16	0.032	-69.6	-59.7	-49.9	-40.0	-30.2
16	0.040	N/A	N/A	-52.5	N/A	N/A

Table 2: Span / Allowable Wind Uplift Pressure Tables (psf) Elevate UNA-CLAD™ UC-6 (Steel)								
Panel Width (inch)	Thickness (ga.)	Span (ft)						
		2	2.5	3	3.5	4	4.5	5
18	24	-51.2	-47.3	-43.5	-39.6	-35.8	-31.9	-28.1
18	22	-61.8	-54.5	-47.2	-39.9	-32.6	-25.3	-18.0
16	22	N/A	N/A	N/A	N/A	-52.5	N/A	N/A

Notes:
1. Values are based on test data with a margin of safety applied.
2. The weight of the panel has not been considered.
3. Values are for the panels and their connecting clips; fastener pullout and pullover shall be by a qualified design professional.
4. Linear interpolation between cells within rows is permissible.
5. Rows with cells containing N/A reflect performance data submitted for only one span.
6. The following products are interchangeable within the scope of this PEER:

Acceptable Alternates			
Category	Listed Product Herein	Alternate	
		GenFlex	Exceptional Metals
Roofing Panel	Elevate UNA-CLAD™ UC-6	GenFlex UNA-CLAD™ UC-6	DefendEX-SS2000
Clips	Elevate UNA-CLAD™ UC-6 Low Float Clip	GenFlex UC-6 Low Float Clip	DefendEX SS2000-LowFloatClip

2023 FBC NON-HVHZ