REVISIONS			
REV	DESCRIPTION	DATE	APPROVED

NOTES:

1. THE PRODUCT SHOWN HEREIN IS DESIGNED AND MANUFACTURED TO COMPLY WITH REQUIREMENTS OF THE FLORIDA BUILDING CODE.
2. WOOD FRAMING, METAL STRUCTURE AND MASONRY OPENING TO BE DESIGNED AND ANCHORED TO PROPERLY TRANSFER ALL LOADS TO STRUCTURE. FRAMING AND MASONRY OPENING IS THE RESPONSIBILITY OF THE ARCHITECT OR ENGINEER OF RECORD.
3. 1X BUCK OVER MASONRY/CONCRETE IS OPTIONAL.
4. WHERE SHIM OR BUCK THICKNESS IS LESS THAN 1–1/2" UNITS MUST BE ANCHORED THROUGH THE FRAME IN ACCORDANCE WITH MANUFACTURER'S PUBLISHED INSTALLATION INSTRUCTIONS. ANCHORS SHALL BE SECURELY FASTENED DIRECTLY INTO MASONRY, CONCRETE OR OTHER STRUCTURAL SUBSTRATE MATERIAL.
5. WHERE WOOD BUCK THICKNESS IS 1–1/2" OR GREATER, BUCK SHALL BE SECURELY FASTENED TO MASONRY, CONCRETE OR OTHER STRUCTURAL SUBSTRATE. UNITS MAY BE ANCHORED THROUGH FRAME TO SECURED WOOD BUCK IN ACCORDANCE WITH MANUFACTURER'S PUBLISHED INSTALLATION INSTRUCTIONS.
6. WHERE 1X BUCK IS NOT USED DISSIMILAR MATERIALS MUST BE SEPARATED WITH APPROVED COATING OR MEMBRANE. SELECTION OF COATING OR MEMBRANE IS THE RESPONSIBILITY OF THE ARCHITECT OR ENGINEER OF RECORD.
7. BUCKS SHALL EXTEND BEYOND UNIT FRAME INTERIOR FACE SO THAT FULL FRAME SUPPORT IS PROVIDED.
8. SHIM AS REQUIRED AT EACH ANCHOR LOCATION WITH LOAD BEARING SHIM. SHIM WHERE SPACE OF 1/16" OR GREATER OCCURS. MAXIMUM ALLOWABLE SHIM STACK TO BE 1/4".
9. SHIMS SHALL BE LOCATED, APPLIED AND MADE FROM MATERIALS AND THICKNESS CAPABLE OF SUSTAINING APPLICABLE LOADS.
10. WIND LOAD DURATION FACTOR Cd=1.6 WAS USED FOR WOOD ANCHOR CALCULATIONS.
11. FRAME MATERIAL: EXTRUDED RIGID PVC.
12. UNITS MUST BE GLAZED PER ASTM E1300, SEE SHEET 3 FOR GLASS DETAILS.
13. APPROVED IMPACT PROTECTIVE SYSTEM <u>IS NOT REQUIRED</u> FOR THIS PRODUCT IN WIND BORNE DEBRIS REGIONS UP TO WIND ZONE 3.
14. FOR ANCHORING INTO WOOD FRAMING OR 2X BUCK USE #10 WOOD SCREWS WITH SUFFICIENT LENGTH TO ACHIEVE A 1 1/4" MINIMUM EMBEDMENT INTO SUBSTRATE. LOCATE ANCHORS AS SHOWN IN ELEVATIONS AND INSTALLATION DETAILS.
15. FOR ANCHORING INTO MASONRY/CONCRETE USE 1/4" TAPCONS WITH SUFFICIENT LENGTH TO ACHIEVE A 1 1/4" MINIMUM EMBEDMENT INTO SUBSTRATE WITH 2'' MINIMUM EDGE DISTANCE. LOCATE ANCHORS AS SHOWN IN ELEVATIONS AND INSTALLATION DETAILS.
16. FOR ANCHORING INTO METAL STRUCTURE USE #10 SMS OR SELF DRILLING SCREWS WITH SUFFICIENT LENGTH TO ACHIEVE 3 THREADS MINIMUM BEYOND STRUCTURE INTERIOR WALL. LOCATE ANCHORS AS SHOWN IN ELEVATIONS AND INSTALLATION DETAILS.
17. ALL FASTENERS TO BE CORROSION RESISTANT.
18. INSTALLATION ANCHORS SHALL BE INSTALLED IN ACCORDANCE WITH ANCHOR MANUFACTURER'S INSTALLATION INSTRUCTIONS AND ANCHORS SHALL NOT BE USED IN SUBSTRATES WITH STRENGTHS LESS THAN THE MINIMUM STRENGTH SPECIFIED BELOW:
    - 18.A. WOOD: MINIMUM SPECIFIC GRAVITY OF G=0.42
    - 18.B. CONCRETE: MINIMUM COMPRESSIVE STRENGTH OF 2,000 PSI.
    - 18.C. MASONRY: HOLLOW/FILLED BLOCK PER ASTM C90 WITH Fm=2,000PSI MINIMUM.
    - 18.D. METAL STRUCTURE: STEEL 18GA (.048") FY=33KSI/FU=52KSI OR ALUMINUM 6063–T5 FU=30KSI .060" THICK MINIMUM

SIGNED: 07/20/2026

TABLE OF CONTENTS

SHEET NO.	DESCRIPTION
1	NOTES
2	ELEVATION
3	RATING CHARTS AND GLAZING DETAILS
4 – 5	CROSS SECTIONS
6 – 8	INSTALLATION DETAILS
9 – 10	COMPONENTS

REILLY WINDOWS & DOORS
901 BURMAN BLVD.
CALVERTON, NY 11933

RWD40F FLUSH SILL SLIDER
LARGE MISSILE IMPACT UP TO WIND ZONE 3
NOTES

DRAWN:	DWG NO.	REV
R.L.	08–04181	–

SCALE	DATE	SHEET
NTS	09/29/25	1 OF 10

L. ROBERTO LOMAS P.E.
208 7th Ave, INDIALANTIC, FL 32903
434-688-0609 rllomas@lrlomaspe.com

LUIS R. LOMAS LICENSE No. 62514 STATE OF FLORIDA PROFESSIONAL ENGINEER

Luis R. Lomas P.E.
FL No.: 62514

REVISIONS			
REV	DESCRIPTION	DATE	APPROVED

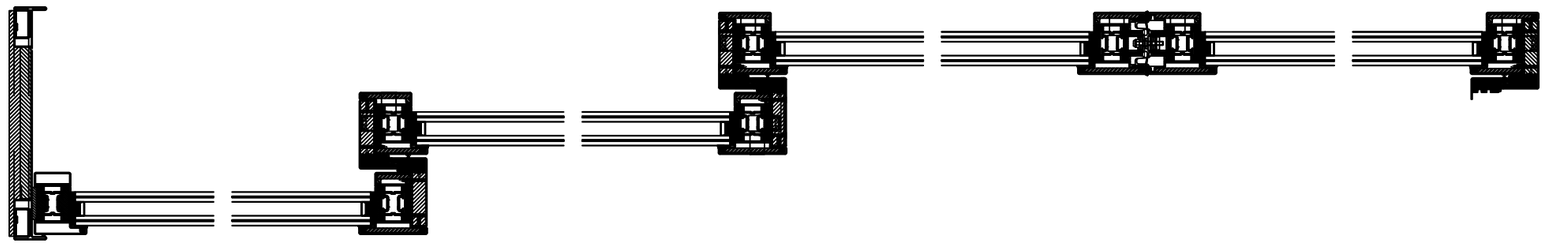

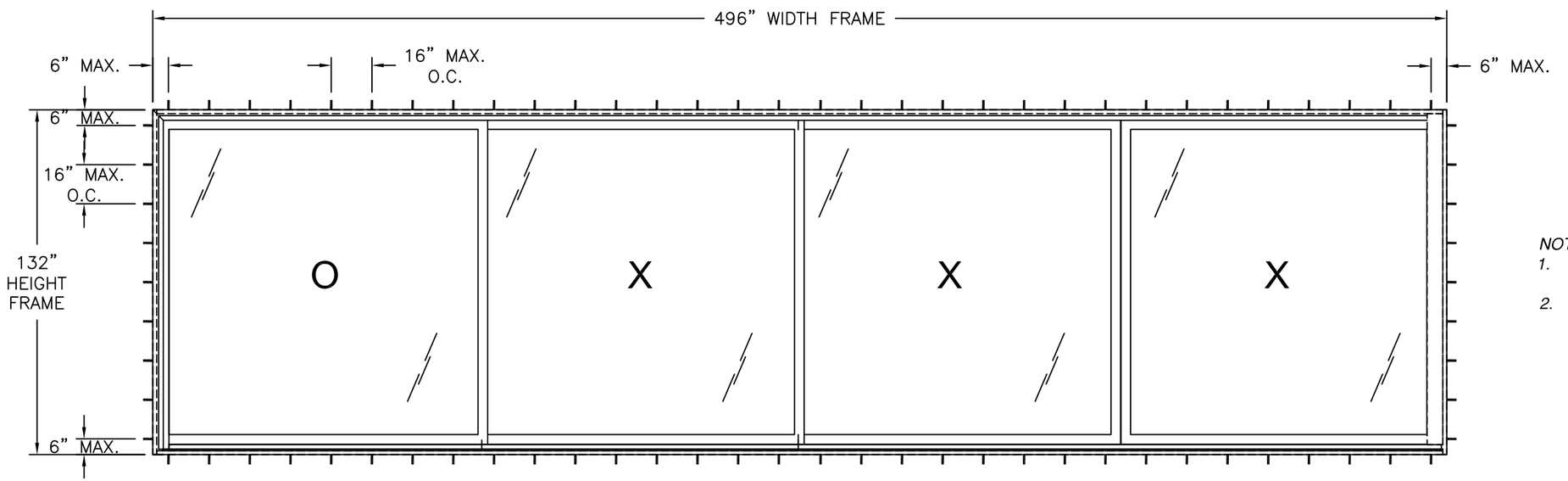

NOTES:

1. *SASH SIZE FIXED = 126" x 126 1/8"*
   SASH SIZE OPERABLE = 125" x 126 1/8"
2. *D.L.O. FIXED : 118 1/2" x 118 5/8"*
   D.L.O. OPERABLE: 117 5/8" x 118 3/4"

RWD40F FLUSH SILL SLIDER

EXTERIOR VIEW

DESIGN PRESSURE RATING	*IMPACT RATING*
±50.0PSF	*LARGE MISSILE IMPACT*

MISSILE LEVEL D, WIND ZONE 3
FOR ADDITIONAL SIZES SEE CHART #1

DESIGN PRESSURE RATING	*IMPACT RATING*
±44.1PSF	*LARGE MISSILE IMPACT*

MISSILE LEVEL D, WIND ZONE 3
FOR ADDITIONAL SIZES SEE CHART #2

(4) PANELS SHOWN, UNLIMITED CONFIGURATIONS IN UNLIMITED NUMBER OF PANELS IS APPLICABLE AS LONG AS INDIVIDUAL PANEL AREA DOES NOT EXCEED 109.46 FT²

SIGNED: 07/20/2026

HARDWARE SCHEDULE	
A.	(6 ASSEMBLIES) CARRIAGE ROLLER KIT, AT EACH OPERABLE DOOR PANELS' BOTTOM RAIL
B.	(4) LOCK BOLT TYPE N COAXIAL, AT BI-PART MEETING STILES, 6" FROM THE TOP WITH A CENTER TO CENTER SPACING OF 36", 38" & 37" THEREAFTER
C.	304 STAINLESS STEEL FLAT STOCK, AT RIGTH STILE OF FIXED PANEL AND RIGHT STILE OF OPERABLE B SASH
D.	304 STAINLESS STEEL FLAT STOCK, TWO AT LEFT STILE OF A SASH, B SASH, AND POCKED MEETING STILE. ONE AT EACH BI-PART MEETING STILE
E.	304 STAINLESS STEEL FLAT STOCK, AT RIGTH STILE OF FIXED PANEL, RIGHT STILE OF OPERABLE B SASH AND BOTH BI-PART MEETING STILES
F.	304 STAINLESS STEEL ROLLED TUBE, TWO AT FRAME HEAD AND TWO AT FRAME JAMB ADJACENT TO FIXED PANEL
G.	304 STAINLESS STEEL FLAT STOCK, ONE AT THERMAL BREAK HOLLOW OF EACH BOTTOM RAIL ON OPERABLE SASH
H.	(6) TOP GEAR GUIDE ON TOP CORNER OF SASHES

REILLY WINDOWS & DOORS
901 BURMAN BLVD.
CALVERTON, NY 11933

RWD40F FLUSH SILL SLIDER
LARGE MISSILE IMPACT UP TO WIND ZONE 3
ELEVATION

DRAWN:	DWG NO.	REV
R.L.	08–04181	–
SCALE NTS	DATE 09/29/25	SHEET 2 OF 10

L. ROBERTO LOMAS P.E.
208 7th Ave, INDIALANTIC, FL 32903
434-688-0609 rllomas@lrlomaspe.com

LUIS R. LOMAS LICENSE No. 62514 STATE OF FLORIDA PROFESSIONAL ENGINEER

Luis R. Lomas P.E.
FL No.: 62514

REVISIONS			
REV	DESCRIPTION	DATE	APPROVED

Rating chart #1 (units with glass A)

Panel Height (in)	Single Panel Width (in)																											
	48.00		54.00		60.00		66.00		72.00		78.00		84.00		90.00		96.00		102.00		108.00		114.00		120.00		125.00	
	Pos	Neg	Pos	Neg	Pos	Neg	Pos	Neg	Pos	Neg	Pos	Neg	Pos	Neg	Pos	Neg	Pos	Neg	Pos	Neg	Pos	Neg	Pos	Neg	Pos	Neg	Pos	Neg
80.00	60.0	60.0	60.0	60.0	60.0	60.0	60.0	60.0	60.0	60.0	60.0	60.0	60.0	60.0	60.0	60.0	60.0	60.0	60.0	60.0	60.0	60.0	60.0	60.0	60.0	60.0	60.0	60.0
84.00	60.0	60.0	60.0	60.0	60.0	60.0	60.0	60.0	60.0	60.0	60.0	60.0	60.0	60.0	60.0	60.0	60.0	60.0	60.0	60.0	60.0	60.0	60.0	60.0	60.0	60.0	60.0	60.0
90.00	60.0	60.0	60.0	60.0	60.0	60.0	60.0	60.0	60.0	60.0	60.0	60.0	60.0	60.0	60.0	60.0	60.0	60.0	60.0	60.0	60.0	60.0	60.0	60.0	60.0	60.0	60.0	60.0
96.00	60.0	60.0	60.0	60.0	60.0	60.0	60.0	60.0	60.0	60.0	60.0	60.0	60.0	60.0	60.0	60.0	60.0	60.0	60.0	60.0	60.0	60.0	60.0	60.0	60.0	60.0	60.0	60.0
98.00	60.0	60.0	60.0	60.0	60.0	60.0	60.0	60.0	60.0	60.0	60.0	60.0	60.0	60.0	60.0	60.0	60.0	60.0	60.0	60.0	60.0	60.0	60.0	60.0	60.0	60.0	60.0	60.0
102.00	60.0	60.0	60.0	60.0	60.0	60.0	60.0	60.0	60.0	60.0	60.0	60.0	60.0	60.0	60.0	60.0	60.0	60.0	60.0	60.0	60.0	60.0	60.0	60.0	60.0	60.0	60.0	60.0
108.00	60.0	60.0	60.0	60.0	60.0	60.0	60.0	60.0	60.0	60.0	60.0	60.0	60.0	60.0	60.0	60.0	60.0	60.0	60.0	60.0	60.0	60.0	60.0	60.0	60.0	60.0	58.4	58.4
114.00	60.0	60.0	60.0	60.0	60.0	60.0	60.0	60.0	60.0	60.0	60.0	60.0	60.0	60.0	60.0	60.0	60.0	60.0	60.0	60.0	60.0	60.0	60.0	60.0	57.6	57.6	55.3	55.3
120.00	60.0	60.0	60.0	60.0	60.0	60.0	60.0	60.0	60.0	60.0	60.0	60.0	60.0	60.0	58.9	58.9	57.5	57.5	56.5	56.5	55.8	55.8	55.4	55.4	54.7	54.7	52.6	52.6
125.00	60.0	60.0	60.0	60.0	60.0	60.0	60.0	60.0	60.0	60.0	59.3	59.3	57.0	57.0	55.2	55.2	53.8	53.8	52.7	52.7	51.9	51.9	51.3	51.3	51.0	51.0	50.5	50.5
126.13	60.0	60.0	60.0	60.0	60.0	60.0	60.0	60.0	60.0	60.0	58.5	58.5	56.3	56.3	54.5	54.5	53.0	53.0	51.9	51.9	51.1	51.1	50.5	50.5	50.1	50.1	50.0	50.0
132.00	60.0	60.0	60.0	60.0	60.0	60.0	59.1	59.1	55.3	55.3	52.2	52.2	49.6	49.6	47.5	47.5	45.9	45.9	44.5	44.5	43.5	43.5	42.7	42.7	-	-	-	-
138.00	60.0	60.0	60.0	60.0	55.5	55.5	51.3	51.3	47.9	47.9	45.1	45.1	42.8	42.8	40.9	40.9	39.3	39.3	38.1	38.1	37.0	37.0	36.2	36.2	-	-	-	-
144.00	59.1	59.1	53.2	53.2	48.5	48.5	44.8	44.8	41.7	41.7	39.2	39.2	37.2	37.2	35.5	35.5	34.0	34.0	32.8	32.8	31.9	31.9	-	-	-	-	-	-

MISSILE LEVEL D, WIND ZONE 3

Rating chart #2 (Units with glass B)

Panel Height (in)	Single Panel Width (in)																											
	48.00		54.00		60.00		66.00		72.00		78.00		84.00		90.00		96.00		102.00		108.00		114.00		120.00		125.00	
	Pos	Neg	Pos	Neg	Pos	Neg	Pos	Neg	Pos	Neg	Pos	Neg	Pos	Neg	Pos	Neg	Pos	Neg	Pos	Neg	Pos	Neg	Pos	Neg	Pos	Neg	Pos	Neg
80.00	50.0	60.0	50.0	60.0	50.0	60.0	50.0	60.0	50.0	60.0	50.0	60.0	50.0	60.0	50.0	60.0	50.0	60.0	50.0	60.0	50.0	60.0	50.0	60.0	50.0	60.0	50.0	60.0
84.00	50.0	60.0	50.0	60.0	50.0	60.0	50.0	60.0	50.0	60.0	50.0	60.0	50.0	60.0	50.0	60.0	50.0	60.0	50.0	60.0	50.0	60.0	50.0	60.0	50.0	60.0	50.0	60.0
90.00	50.0	60.0	50.0	60.0	50.0	60.0	50.0	60.0	50.0	60.0	50.0	60.0	50.0	60.0	50.0	60.0	50.0	60.0	50.0	60.0	50.0	60.0	50.0	60.0	50.0	60.0	50.0	60.0
96.00	50.0	60.0	50.0	60.0	50.0	60.0	50.0	60.0	50.0	60.0	50.0	60.0	50.0	60.0	50.0	60.0	50.0	60.0	50.0	60.0	50.0	60.0	50.0	60.0	50.0	60.0	50.0	58.0
98.00	50.0	60.0	50.0	60.0	50.0	60.0	50.0	60.0	50.0	60.0	50.0	60.0	50.0	60.0	50.0	60.0	50.0	60.0	50.0	60.0	50.0	60.0	50.0	60.0	50.0	59.2	50.0	56.8
102.00	50.0	60.0	50.0	60.0	50.0	60.0	50.0	60.0	50.0	60.0	50.0	60.0	50.0	60.0	50.0	60.0	50.0	60.0	50.0	60.0	50.0	60.0	50.0	59.8	50.0	56.8	50.0	54.6
108.00	50.0	60.0	50.0	60.0	50.0	60.0	50.0	60.0	50.0	60.0	50.0	60.0	50.0	60.0	50.0	60.0	50.0	60.0	50.0	60.0	50.0	59.7	50.0	56.5	50.0	53.7	50.0	51.5
114.00	50.0	60.0	50.0	60.0	50.0	60.0	50.0	60.0	50.0	60.0	50.0	60.0	50.0	60.0	50.0	60.0	50.0	60.0	50.0	59.8	50.0	56.5	50.0	53.5	50.0	50.9	48.8	48.8
120.00	50.0	60.0	50.0	60.0	50.0	60.0	50.0	60.0	50.0	60.0	50.0	60.0	50.0	60.0	50.0	58.9	50.0	57.5	50.0	56.5	50.0	53.7	50.0	50.9	48.3	48.3	46.4	46.4
125.00	50.0	60.0	50.0	60.0	50.0	60.0	50.0	60.0	50.0	60.0	50.0	59.3	50.0	57.0	50.0	55.2	50.0	53.8	50.0	52.7	50.0	51.5	48.8	48.8	46.4	46.4	44.5	44.5
126.13	50.0	60.0	50.0	60.0	50.0	60.0	50.0	60.0	50.0	60.0	50.0	58.5	50.0	56.3	50.0	54.5	50.0	53.0	50.0	51.9	50.0	51.1	48.4	48.4	46.0	46.0	44.1	44.1
132.00	50.0	60.0	50.0	60.0	50.0	60.0	50.0	59.1	50.0	55.3	50.0	52.2	49.6	49.6	47.5	47.5	45.9	45.9	44.5	44.5	43.5	43.5	42.7	42.7	-	-	-	-
138.00	50.0	60.0	50.0	60.0	50.0	55.5	50.0	51.3	47.9	47.9	45.1	45.1	42.8	42.8	40.9	40.9	39.3	39.3	38.1	38.1	37.0	37.0	36.2	36.2	-	-	-	-
144.00	50.0	59.1	50.0	53.2	48.5	48.5	44.8	44.8	41.7	41.7	39.2	39.2	37.2	37.2	35.5	35.5	34.0	34.0	32.8	32.8	31.9	31.9	-	-	-	-	-	-

MISSILE LEVEL D, WIND ZONE 3

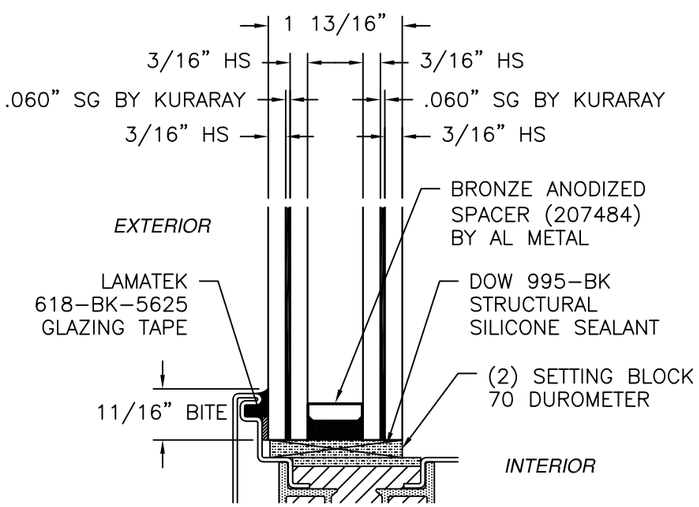

GLAZING DETAIL A

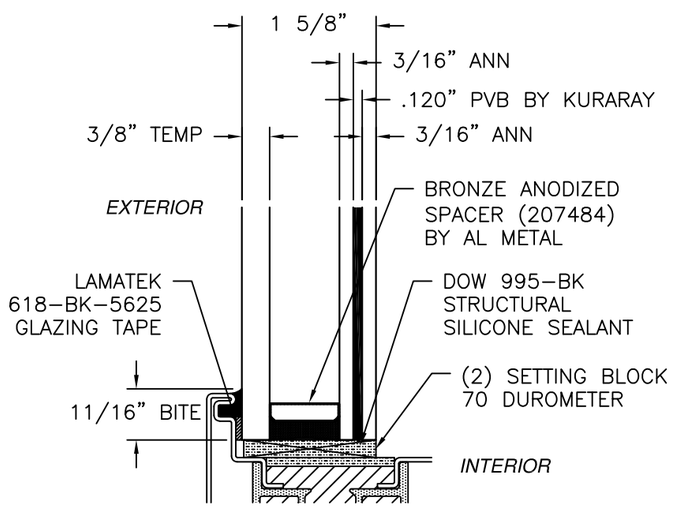

GLAZING DETAIL B

SIGNED: 07/20/2026

REILLY WINDOWS & DOORS
901 BURMAN BLVD.
CALVERTON, NY 11933

RWD40F FLUSH SILL SLIDER
LARGE MISSILE IMPACT UP TO WIND ZONE 3
RATING CHARTS AND GLAZING DETAILS

DRAWN: R.L.	DWG NO. 08-04181	REV –
SCALE NTS	DATE 09/29/25	SHEET 3 OF 10

L. ROBERTO LOMAS P.E.
208 7th Ave, INDIALANTIC, FL 32903
434-688-0609 rllomas@lrlomaspe.com

LUIS R. LOMAS LICENSE No. 62514 STATE OF FLORIDA PROFESSIONAL ENGINEER

Luis R. Lomas P.E.
FL No.: 62514

BILL OF MATERIALS

ITEM NO.:	PART NUMBER	DESCRIPTION	MANUFACTURER	MATERIAL
1	P1105	SASH RAILS		STAINLESS STEEL
1a	P9999E	BI-PART MEETING STILE		STAINLESS STEEL
1c	P1106	OPERABLE SASH BOTTOM RAIL		STAINLESS STEEL
2	P1193	JAMB HEAD AND LEG		STAINLESS STEEL
3	P1101	FIXED SASH STILE		STAINLESS STEEL
4	P9999C	SASH STILES		STAINLESS STEEL
5	P1142	STILE CAPS		STAINLESS STEEL
6	P9999D	SASH STILES		STAINLESS STEEL
7	RWD SILL	REILLY CUSTOM SILL		ALUMINUM
10	RE001	REINFORCING	RWD	304 STAINLESS STEEL
11	RE002	REINFORCING	RWD	304 STAINLESS STEEL
12	RE006	REINFORCING	RWD	304 STAINLESS STEEL
13	RE009	REINFORCING (TUBE)	RWD	304 STAINLESS STEEL
15	BRONZE SILL TRACK	CUSTOM BILT TRACK	RWD	BRONZE
16	SILL GUIDE	CUSTOM ALUMINUM SILL GUIDE	RWD	ALUMINUM
17	HEAD TRACK	CUSTOM ALUMINUM HEAD TRACK	RWD	ALUMINUM
18	BL1.5/BL1.6	BLOCKING FOR FIXED SASH	RWD	
19	RL.9	CUSTOM GUIDE	RWD	
20	BL1.5	INTERLOCK BLOCK	RWD	DERLIN
21	BL.9A	INTERLOCK BLOCK	RWD	DERLIN
23	SLIDER PLATE	IMPACT GUIDE PLATE	RWD	17-4 PH STAINLESS STEEL
24	LAD255SH30/50	GEAR	FFI	304 STAINLESS STEEL
25	LAR3000012/A18	CARRIAGE ROLLER KIT, W/ MIDDLE CARRIAGE (LAR400T002)	FFI	304 STAINLESS STEEL
26	LLB.631.12	LOCK BOLT TYPE N COAXIAL, BLACK	FFI	
27	.25" X 1"	TUBE	YARDE METALS	304 STAINLESS STEEL
28	847329	BRIDGE SEAL	SIEGENIA	
29		WEEP COVER		
31		No. 10 x 3" LAG SCREW		ZINC COATED STEEL
33		No. 8 x 2" WOOD SCREW		STAINLESS STEEL
34		No. 10 x 2" MACHINE SCREW		ZINC COATED STEEL
35		No. 8 x 1.5" MACHINE SCREW		STAINLESS STEEL
36		4.2 MM x 25 MM SHEET METAL SCREW		STAINLESS STEEL
37		4.2 MM x 19 MM SHEET METAL SCREW		STAINLESS STEEL
38		No. 6 x .75" SHEET METAL SCREW		STAINLESS STEEL
39		M5 x 25 MM MACHINE SCREW		STAINLESS STEEL
40	995-BK	STRUCTURAL SILICONE SEALANT		DOW
41	GE 1105S	SEAL AT HEAD		SECCO
42	GE 1106S	SEAL AT SILL AND BI-PARTING MEETING STILE		SECCO
43	GE 1142	BULB SEAL AT INTERLOCK		SECCO
44	#34P	BRUSH SEAL AT INTERLOCK		ZERO
45	618-BK-5625	GLAZING TAPE, D/S 1/16" x 5/16"		LAMATEK

REVISIONS			
REV	DESCRIPTION	DATE	APPROVED

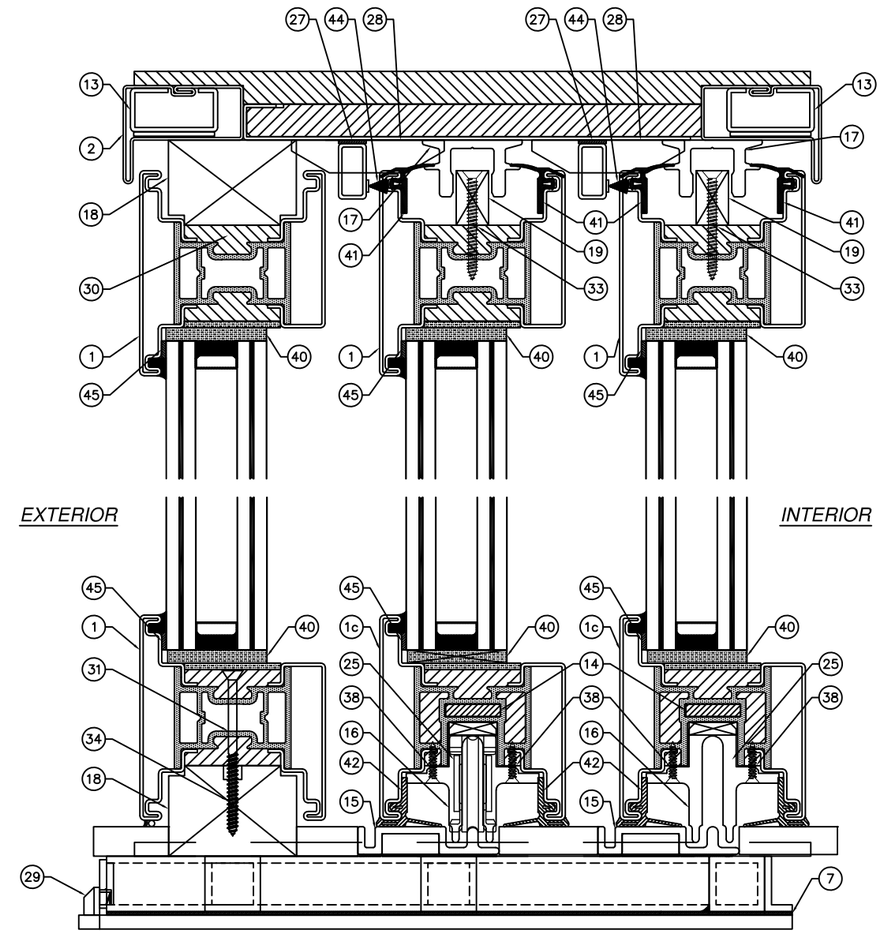

VERTICAL CROSS SECTION

SIGNED: 07/20/2026

REILLY WINDOWS & DOORS
901 BURMAN BLVD.
CALVERTON, NY 11933

RWD40F FLUSH SILL SLIDER
LARGE MISSILE IMPACT UP TO WIND ZONE 3
VERTICAL CROSS SECTION

DRAWN:	DWG NO.	REV
R.L.	08-04181	–

SCALE	DATE	SHEET
NTS	09/29/25	4 OF 10

L. ROBERTO LOMAS P.E.
208 7th Ave, INDIALANTIC, FL 32903
434-688-0609 rllomas@lrlomaspe.com

LUIS R. LOMAS LICENSE No. 62514 STATE OF FLORIDA PROFESSIONAL ENGINEER

Luis R. Lomas P.E.
FL No.: 62514

REVISIONS			
REV	DESCRIPTION	DATE	APPROVED

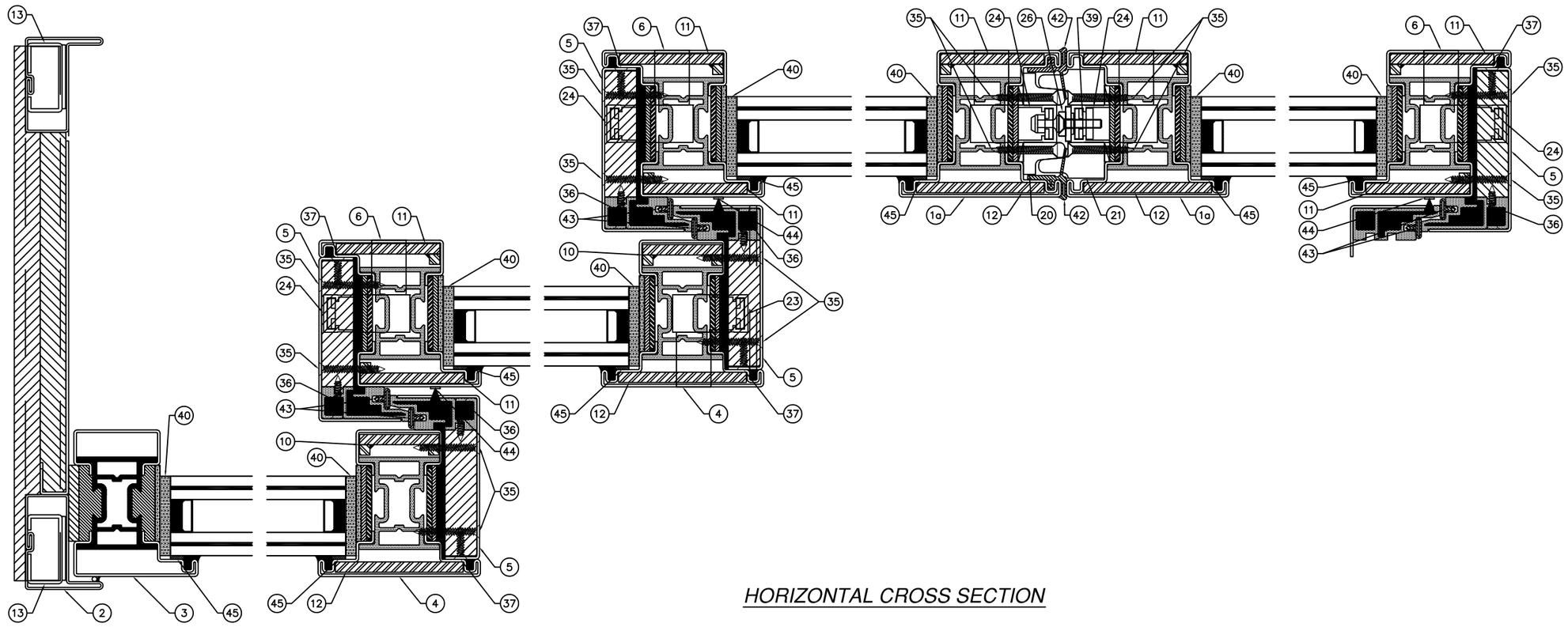

HORIZONTAL CROSS SECTION

SIGNED: 07/20/2026

REILLY WINDOWS & DOORS
901 BURMAN BLVD.
CALVERTON, NY 11933

RWD40F FLUSH SILL SLIDER
LARGE MISSILE IMPACT UP TO WIND ZONE 3
HORIZONTAL CROSS SECTION

DRAWN:	DWG NO.	REV
R.L.	08-04181	–
SCALE NTS	DATE 09/29/25	SHEET 5 OF 10

L. ROBERTO LOMAS P.E.
208 7th Ave, INDIALANTIC, FL 32903
434-688-0609 rllomas@lrlomaspe.com

LUIS R. LOMAS LICENSE No. 62514 STATE OF FLORIDA PROFESSIONAL ENGINEER

Luis R. Lomas P.E.
FL No.: 62514

REVISIONS			
REV	DESCRIPTION	DATE	APPROVED

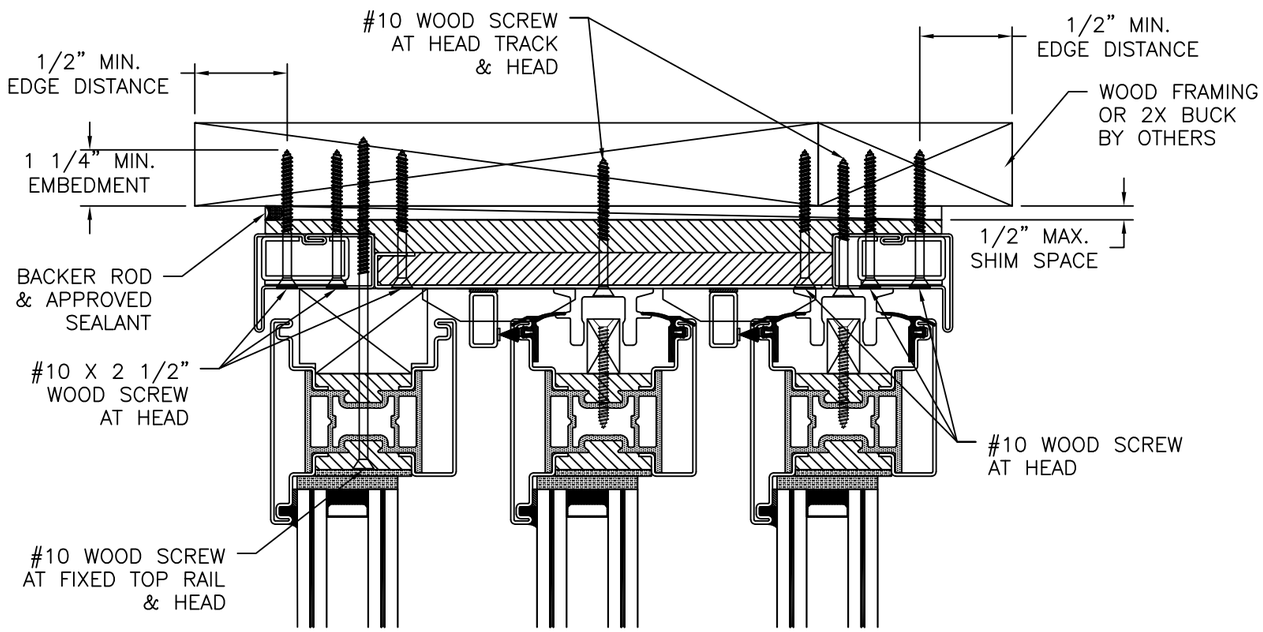

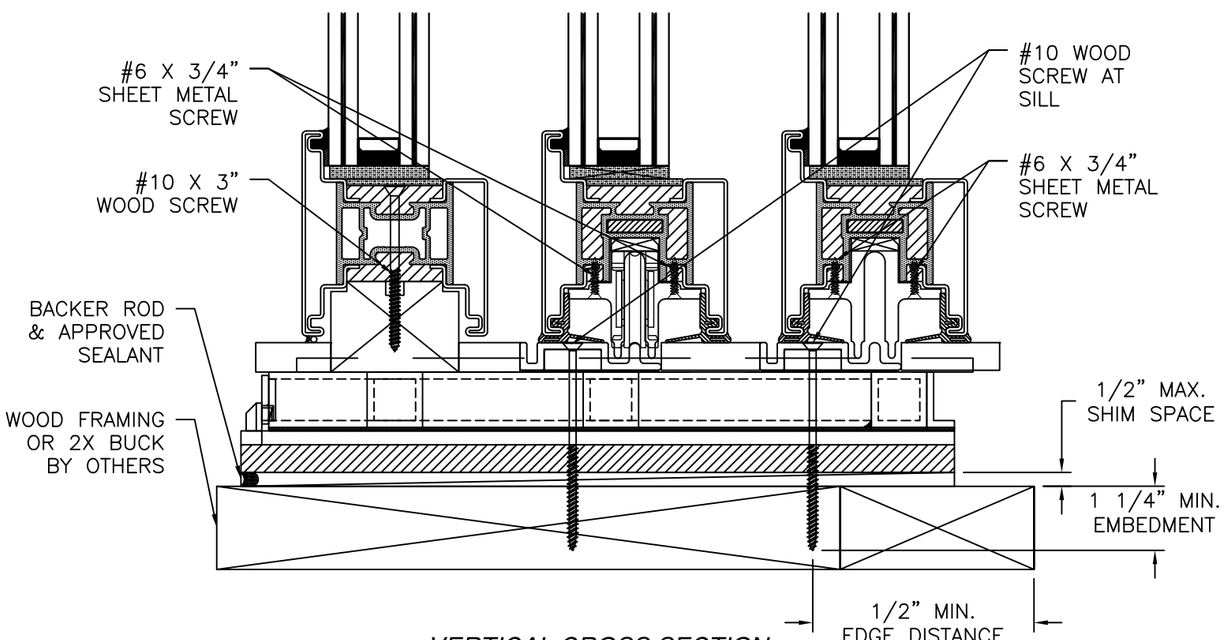

VERTICAL CROSS SECTION

WOOD FRAMING OR 2X BUCK INSTALLATION

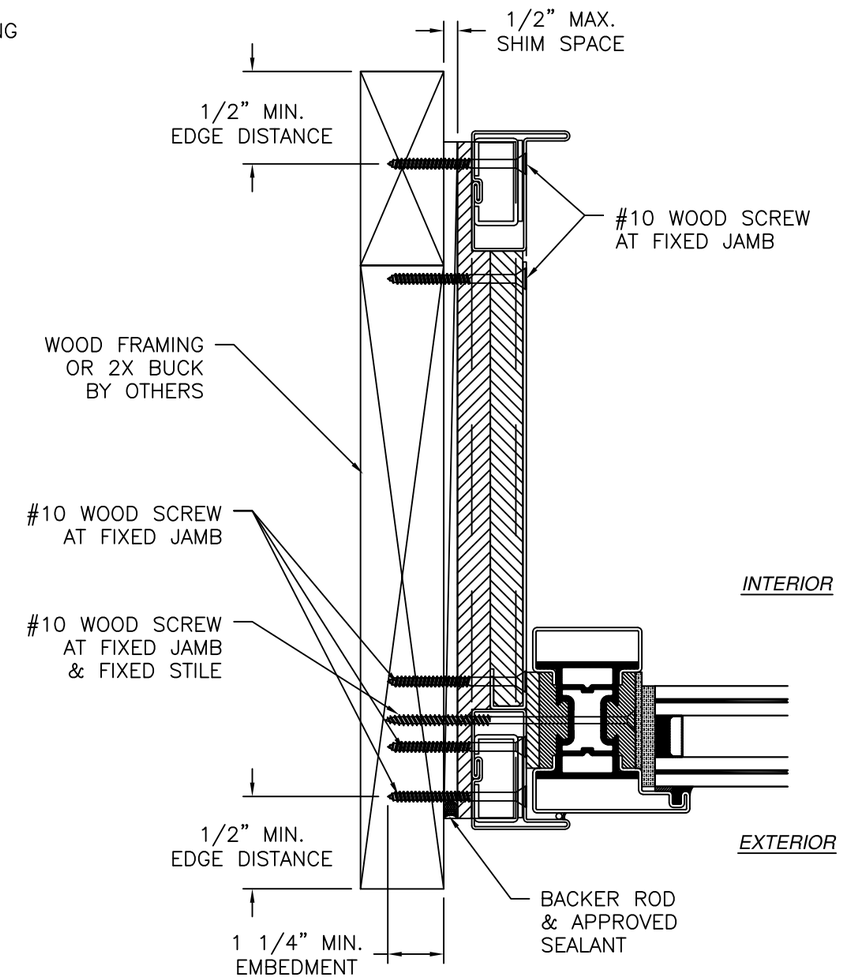

JAMB INSTALLATION DETAIL

WOOD FRAMING OR 2X BUCK INSTALLATION

SIGNED: 07/20/2026

NOTES:

1. *INTERIOR AND EXTERIOR FINISHES, BY OTHERS, NOT SHOWN FOR CLARITY.*
2. *PERIMETER AND JOINT SEALANT BY OTHERS TO BE DESIGNED IN ACCORDANCE WITH ASTM E2112*

REILLY WINDOWS & DOORS
901 BURMAN BLVD.
CALVERTON, NY 11933

RWD40F FLUSH SILL SLIDER
LARGE MISSILE IMPACT UP TO WIND ZONE 3
INSTALLATION DETAILS

DRAWN:	DWG NO.	REV
R.L.	08-04181	–
SCALE NTS	DATE 09/29/25	SHEET 6 OF 10

L. ROBERTO LOMAS P.E.
208 7th Ave, INDIALANTIC, FL 32903
434-688-0609 rllomas@lrlomaspe.com

LUIS R. LOMAS LICENSE No. 62514 STATE OF FLORIDA PROFESSIONAL ENGINEER

Luis R. Lomas P.E.
FL No.: 62514

REVISIONS			
REV	DESCRIPTION	DATE	APPROVED

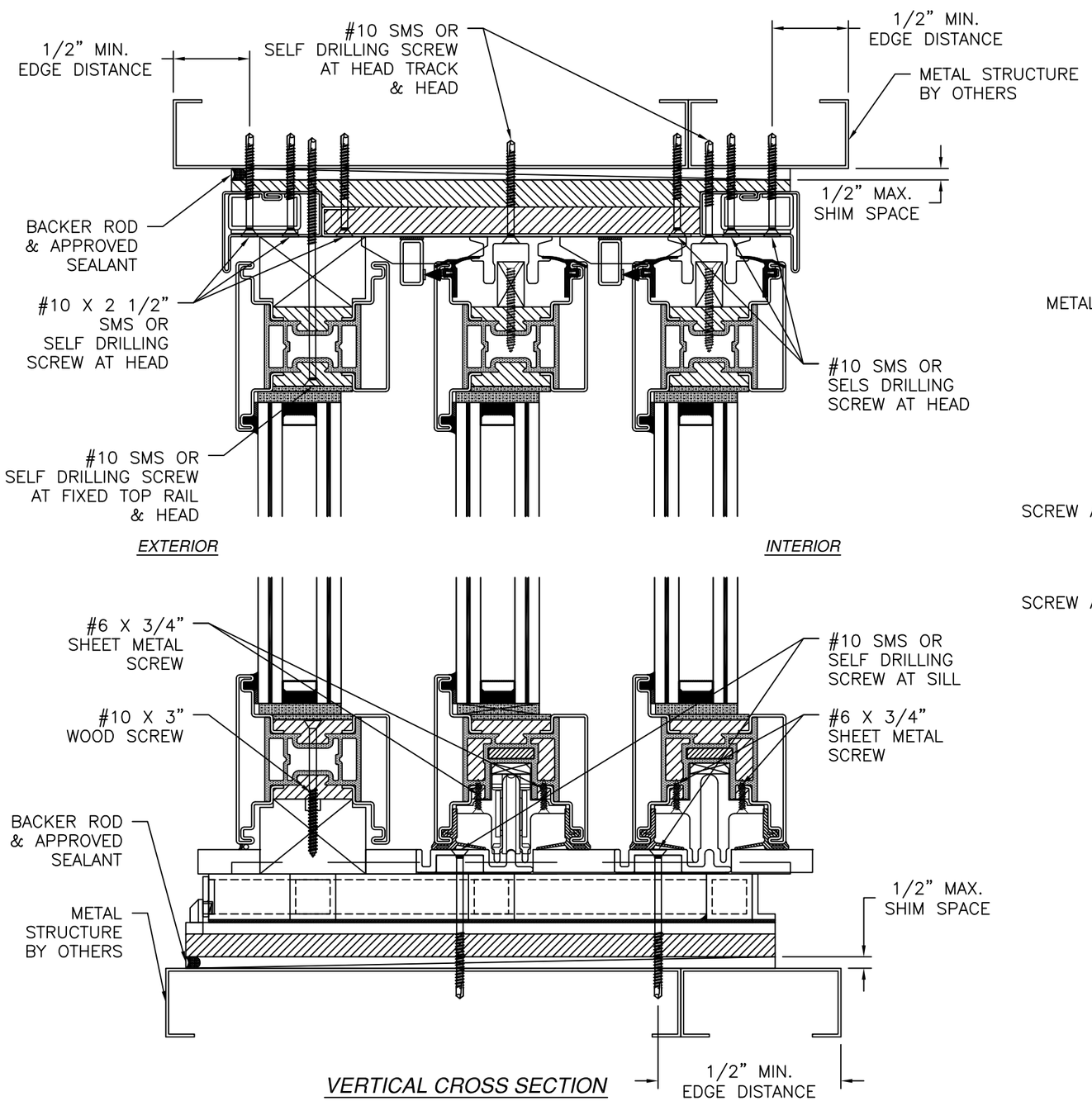

VERTICAL CROSS SECTION

METAL STRUCTURE INSTALLATION

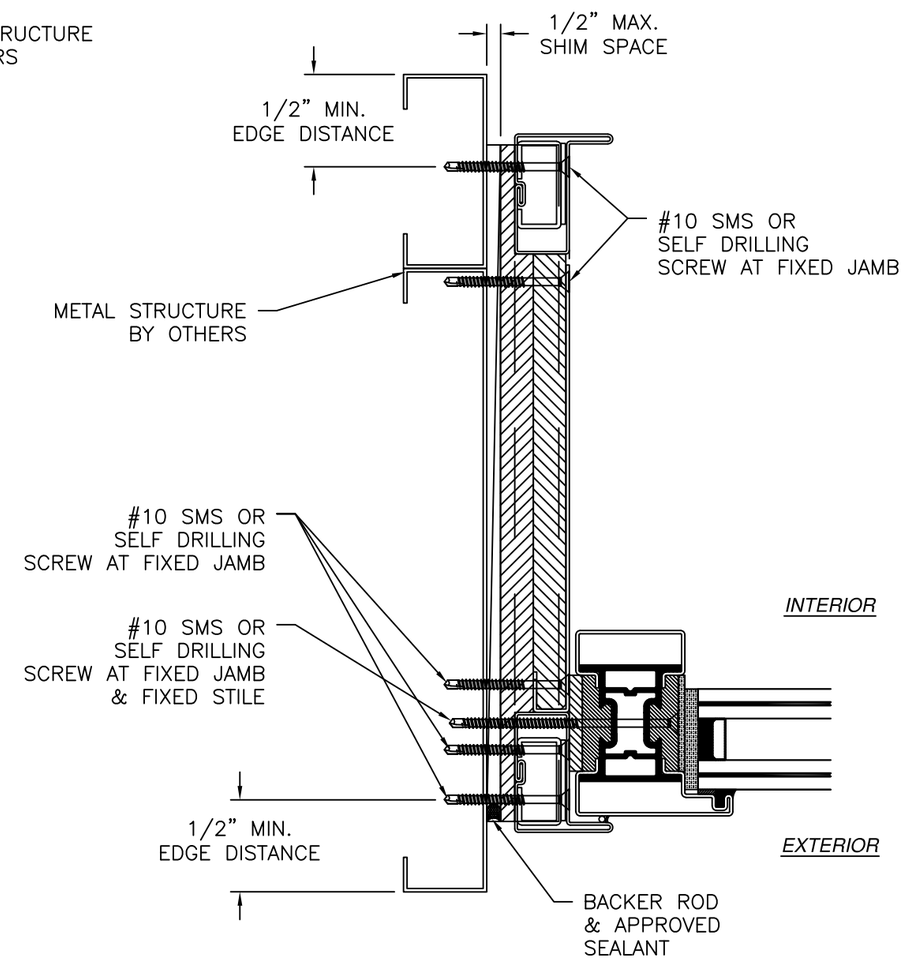

JAMB INSTALLATION DETAIL

METAL STRUCTURE INSTALLATION

SIGNED: 07/20/2026

NOTES:

1. *INTERIOR AND EXTERIOR FINISHES, BY OTHERS, NOT SHOWN FOR CLARITY.*
2. *PERIMETER AND JOINT SEALANT BY OTHERS TO BE DESIGNED IN ACCORDANCE WITH ASTM E2112*

REILLY WINDOWS & DOORS
901 BURMAN BLVD.
CALVERTON, NY 11933

RWD40F FLUSH SILL SLIDER
LARGE MISSILE IMPACT UP TO WIND ZONE 3
INSTALLATION DETAILS

DRAWN: R.L.	DWG NO. 08-04181	REV –
SCALE NTS	DATE 09/29/25	SHEET 7 OF 10

L. ROBERTO LOMAS P.E.
208 7th Ave, INDIALANTIC, FL 32903
434-688-0609 rllomas@lrlomaspe.com

LUIS R. LOMAS LICENSE No. 62514 STATE OF FLORIDA PROFESSIONAL ENGINEER

Luis R. Lomas P.E.
FL No.: 62514

REVISIONS			
REV	DESCRIPTION	DATE	APPROVED

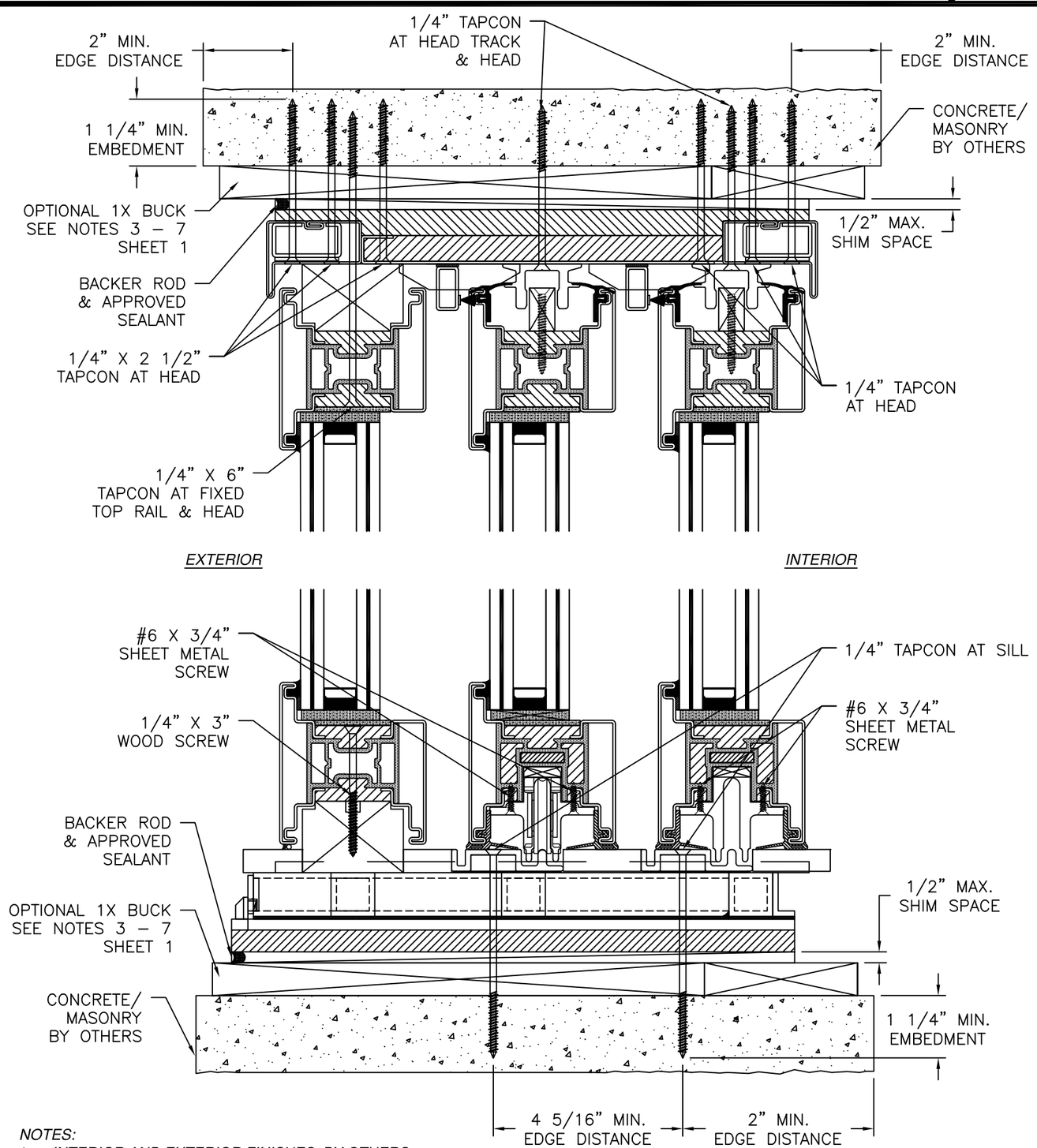

NOTES:

1. *INTERIOR AND EXTERIOR FINISHES, BY OTHERS, NOT SHOWN FOR CLARITY.*
2. *PERIMETER AND JOINT SEALANT BY OTHERS TO BE DESIGNED IN ACCORDANCE WITH ASTM E2112*

VERTICAL CROSS SECTION

CONCRETE/MASONRY INSTALLATION

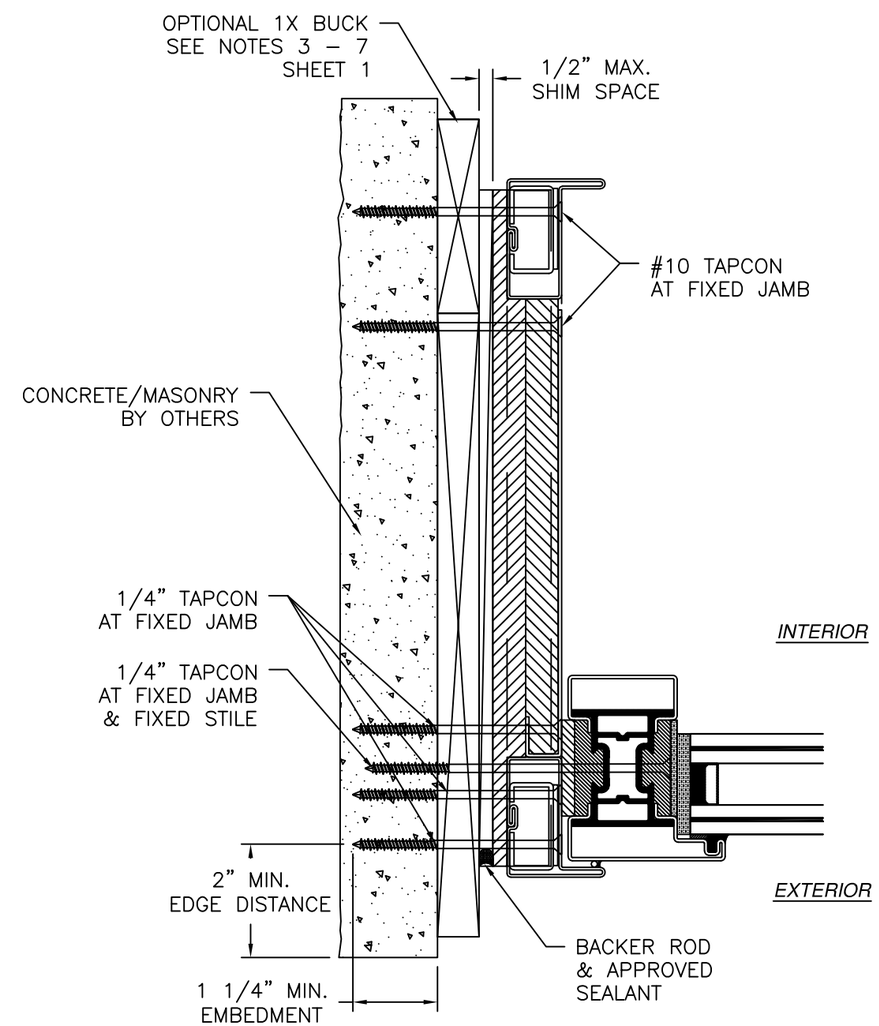

JAMB INSTALLATION DETAIL

CONCRETE/MASONRY INSTALLATION

SIGNED: 07/20/2026

REILLY WINDOWS & DOORS
901 BURMAN BLVD.
CALVERTON, NY 11933

RWD40F FLUSH SILL SLIDER
LARGE MISSILE IMPACT UP TO WIND ZONE 3
INSTALLATION DETAILS

DRAWN:	DWG NO.	REV
R.L.	08-04181	–
SCALE NTS	DATE 09/29/25	SHEET 8 OF 10

L. ROBERTO LOMAS P.E.
208 7th Ave, INDIALANTIC, FL 32903
434-688-0609 rllomas@lrlomaspe.com

LUIS R. LOMAS LICENSE No. 62514 STATE OF FLORIDA PROFESSIONAL ENGINEER

Luis R. Lomas P.E.
FL No.: 62514

REVISIONS			
REV	DESCRIPTION	DATE	APPROVED

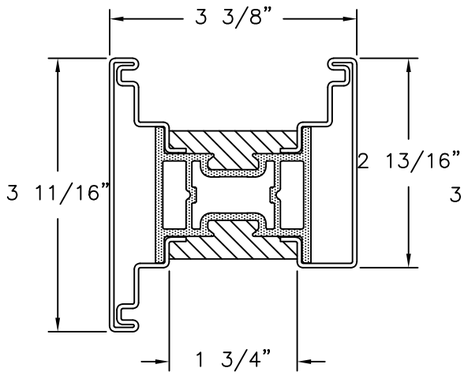

SASH RAILS
STAINLESS STEEL (P1105)

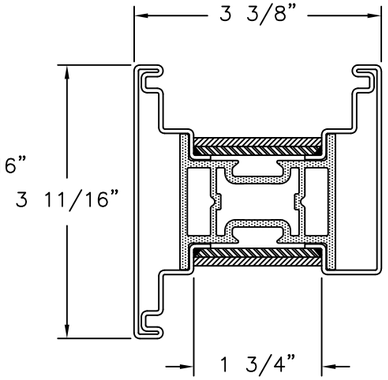

BI-PART MEETING STILE
STAINLESS STEEL (P9999E)

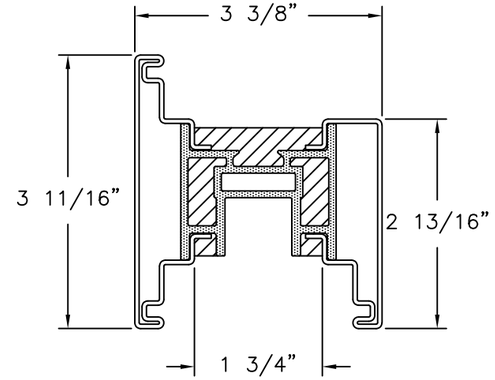

OPERABLE SASH BOTTOM RAILS
STAINLESS STEEL (P1106)

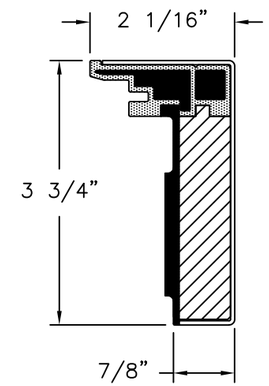

STILE CAPS
STAINLESS STEEL (P1142)

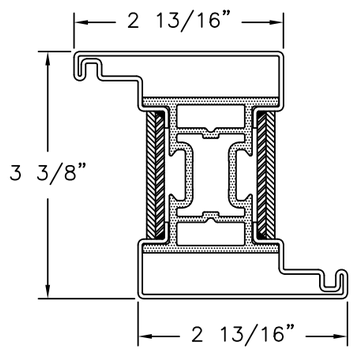

SASH STILES
STAINLESS STEEL (P9999D)

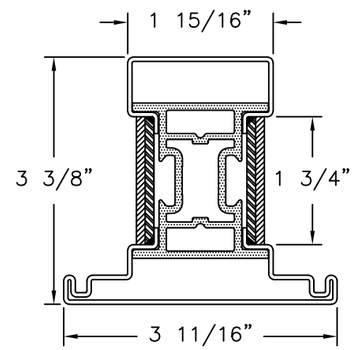

SASH STILES
STAINLESS STEEL (P9999C)

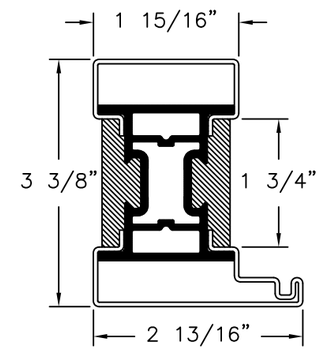

FIXED SASH STILE
STAINLESS STEEL (P1101)

SIGNED: 07/20/2026

REILLY WINDOWS & DOORS
901 BURMAN BLVD.
CALVERTON, NY 11933

RWD40F FLUSH SILL SLIDER
LARGE MISSILE IMPACT UP TO WIND ZONE 3
COMPONENTS

DRAWN:	DWG NO.	REV
R.L.	08-04181	–

SCALE	DATE	SHEET
NTS	09/29/25	9 OF 10

L. ROBERTO LOMAS P.E.
208 7th Ave, INDIALANTIC, FL 32903
434-688-0609 rllomas@lrlomaspe.com

LUIS R. LOMAS
LICENSE
No. 62514
STATE OF
FLORIDA
PROFESSIONAL ENGINEER

Luis R. Lomas P.E.
FL No.: 62514

REVISIONS			
REV	DESCRIPTION	DATE	APPROVED

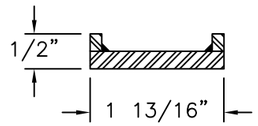

REINFORCEMENT
304 STAINLESS STEEL (RE001)

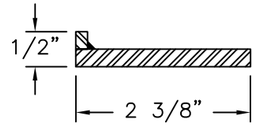

REINFORCEMENT
304 STAINLESS STEEL (RE002)

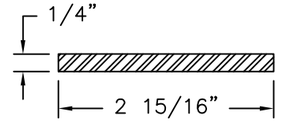

REINFORCEMENT
304 STAINLESS STEEL (RE006)

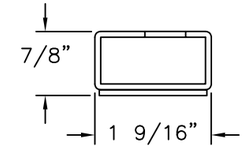

REINFORCEMENT
304 STAINLESS STEEL (RE009)

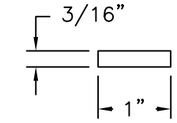

REINFORCEMENT
304 STAINLESS STEEL (RE011)

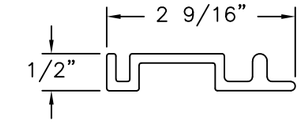

REINFORCEMENT
304 STAINLESS STEEL (BRONZE SILL TRACK)

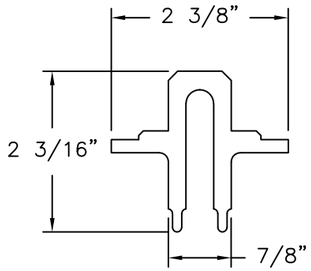

SILL GUIDE
ALUMINUM 6063-T5

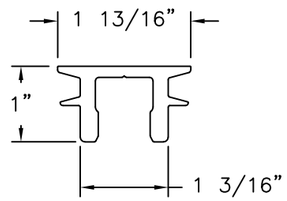

HEAD TRACK
ALUMINUM 6063-T5

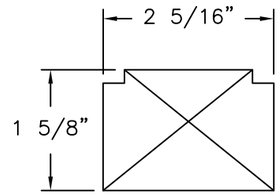

BLOCKING FOR FIXED SASH
BL1.5/BL1.6

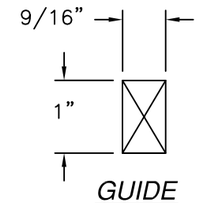

GUIDE
RL.9

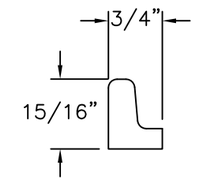

INTERLOCK BLOCK
DERLIN (BL1.5)

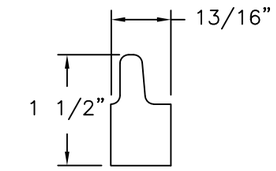

INTERLOCK BLOCK
DERLIN (BL.9A)

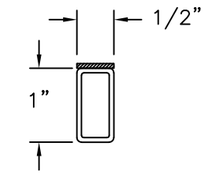

TUBE
304 STAINLESS STEEL

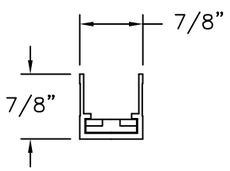

GEAR
304 STAINLESS STEEL
(LAD255SH30/50)

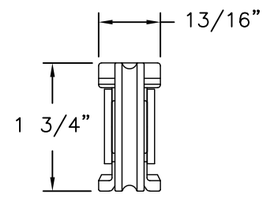

CARRIAGE ROLLER KIT
304 STAINLESS STEEL
(LAR3000012/A18)

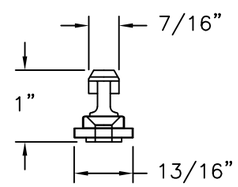

LOCK BOLT TYPE N COAXIAL
LLB.631.12

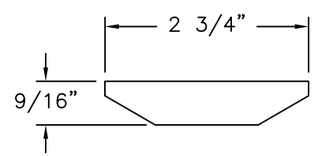

BRIDGE SEAL
847329

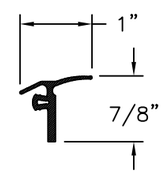

SEAL AT HEAD
GE 11055

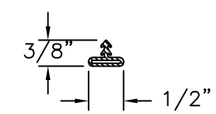

BULB SEAL
AT INTERLOCK
GE 1142

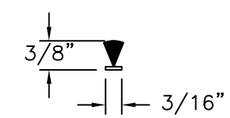

BRUSH SEAL
AT INTERLOCK
#34P

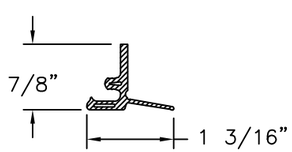

SEAL AT SILL AND BI-PARTING
MEETING STILE
GE11065

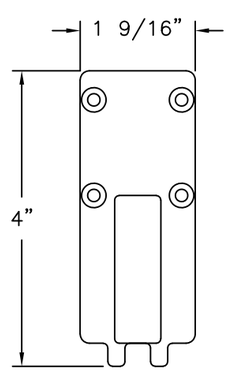

IMPACT GUIDE PLATE
17-4 PH STAINLESS STEEL (BI-PART PLATE)

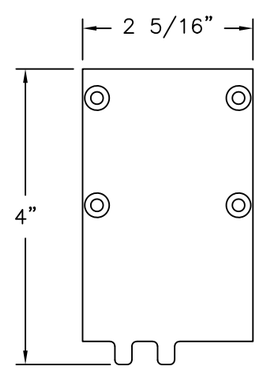

IMPACT GUIDE PLATE
17-4 PH STAINLESS STEEL (SLIDER PLATE)

SIGNED: 07/20/2026

REILLY WINDOWS & DOORS
901 BURMAN BLVD.
CALVERTON, NY 11933

RWD40F FLUSH SILL SLIDER
LARGE MISSILE IMPACT UP TO WIND ZONE 3
COMPONENTS

DRAWN: R.L.	DWG NO. 08-04181	REV –
SCALE NTS	DATE 09/29/25	SHEET 10 OF 10

L. ROBERTO LOMAS P.E.
208 7th Ave, INDIALANTIC, FL 32903
434-688-0609 rllomas@lrlomaspe.com

LUIS R. LOMAS LICENSE No. 62514 STATE OF FLORIDA PROFESSIONAL ENGINEER

Luis R. Lomas P.E.
FL No.: 62514