SERIES–2400ST ALUMINUM SLIDING GLASS DOOR

SEE SHEET 3 FOR DESIGN LOAD CAPACITY OF DESIRED GLASS SIZE.

USING CHARTS ON SHEETS 4 & 5 SELECT ANCHOR OPTION (1/4" MAX. SHIM) WITH DESIGN RATING MORE THAN DESIGN LOADS REQUIRED.

LOWER DESIGN PRESSURES FROM GLASS OR ANCHOR CHARTS (HEAD & SILL) WILL APPLY TO ENTIRE SYSTEM, WHEN SHIM AT JAMBS EXCEED 1/4", LOWER Dp FROM GLASS, ANCHOR CHART (HEAD/SILL ON SHEET 4 & 5) OR JAMB CHART (SHEET 10) SHALL CONTROL FOR ENTIRE ASSEMBLY SYSTEM.

DOORS MUST COMPLY WITH EGRESS REQUIREMENTS AS APPLICABLE PER FBC.

THIS PRODUCT HAS BEEN DESIGNED AND TESTED TO COMPLY WITH THE REQUIREMENTS OF THE 2023 (8TH EDITION) FLORIDA BUILDING CODE INCLUDING HIGH VELOCITY HURRICANE ZONE (HVHZ).

1BY OR 2BY WOOD BUCKS & BUCK FASTENERS BY OTHERS, MUST BE DESIGNED AND INSTALLED ADEQUATELY TO TRANSFER APPLIED PRODUCT LOADS TO THE BUILDING STRUCTURE.

ANCHORS SHALL BE CORROSION RESISTANT, SPACED AS SHOWN ON DETAILS AND INSTALLED PER MANUF'S INSTRUCTIONS. SPECIFIED EMBEDMENT TO BASE MATERIAL SHALL BE BEYOND WALL DRESSING OR STUCCO.

A LOAD DURATION INCREASE IS USED IN DESIGN OF ANCHORS INTO WOOD ONLY.

ALL SHIMS TO BE HIGH IMPACT, NON–METALLIC AND NON–COMPRESSIBLE.

MATERIALS INCLUDING BUT NOT LIMITED TO STEEL/METAL SCREWS, THAT COME INTO CONTACT WITH OTHER DISSIMILAR MATERIALS SHALL MEET THE REQUIREMENTS OF THE 2023 FLORIDA BLDG. CODE & ADOPTED STANDARDS.

THIS PRODUCT APPROVAL IS GENERIC AND DOES NOT PROVIDE INFORMATION FOR A SITE SPECIFIC PROJECT, i.e. LIFE SAFETY OF THIS PRODUCT, ADEQUACY OF STRUCTURE RECEIVING THIS PRODUCT AND SEALING AROUND OPENING FOR WATER INFILTRATION RESISTANCE ETC.
CONDITIONS NOT SHOWN IN THIS DRAWING ARE TO BE ANALYZED SEPARATELY, AND TO BE REVIEWED BY BUILDING OFFICIAL.

DESIGN LOADS SHOWN ARE BASED ON 'ALLOWABLE STRESS DESIGN (ASD)'.

MANUFACTURER'S LABEL SHALL BE LOCATED ON A READILY VISIBLE LOCATION IN ACCORDANCE WITH SECTION 1709.9.3 OF FLORIDA BUILDING CODE. LABELING TO COMPLY WITH SECTION 1709.9.2.

THESE DOORS ARE RATED FOR LARGE & SMALL MISSILE IMPACT. SHUTTERS ARE NOT REQUIRED.

Sealed: 6/18/2026

FL #27914

A– CONTRACTOR TO BE RESPONSIBLE FOR THE SELECTION, PURCHASE AND INSTALLATION OF THIS PRODUCT BASED ON THIS PRODUCT EVALUATION PROVIDED HE/SHE DOES NOT DEVIATE FROM THE CONDITIONS DETAILED ON THIS DOCUMENT.

B– THIS PRODUCT EVALUATION DOCUMENT WILL BE CONSIDERED INVALID IF ALTERED BY ANY MEANS.

C– SITE SPECIFIC PROJECTS SHALL BE PREPARED BY A FLORIDA REGISTERED ENGINEER OR ARCHITECT WHICH WILL BECOME THE ENGINEER OF RECORD (E.O.R.) FOR THE PROJECT AND WHO WILL BE RESPONSIBLE FOR THE PROPER USE OF THE P.E.D. ENGINEER OF RECORD, ACTING AS A DELEGATED ENGINEER TO THE P.E.D. ENGINEER SHALL SUBMIT TO THIS LATTER THE SITE SPECIFIC DRAWINGS FOR REVIEW.

D– THIS P.E.D. SHALL BEAR THE DATE AND ORIGINAL SEAL AND SIGNATURE OF THE PROFESSIONAL ENGINEER OF RECORD THAT PREPARED IT.

JALAL FAROOQ LICENSE No. 81223 STATE OF FLORIDA PROFESSIONAL ENGINEER

AL-FAROOQ CORPORATION
ENGINEERS & PRODUCT DEVELOPMENT
9360 SUNSET DRIVE, SUITE 220
MIAMI, FLORIDA 33173 (C.A.N. 3538)
TEL. (305) 264-8100 FAX. (305) 262-6978

COMP–ANL\21–21F–TG

SERIES–2400ST ALUM SLD. GLASS DOOR (L.M.I.)

TECNOGLASS, LLC
3550 N.W. 49 STREET
MIAMI, FL. 33142
TEL. (305) 638–5151 FAX. (305) 638–5158

revisions:

no	date	by	description
A	07.31.23		UPDATED TO 2023 FBC
B	06.11.26		GENERAL REVISION

date: 03–16–21
scale: –
dr. by: TARIQ
chk. by:

drawing no. 21–21F

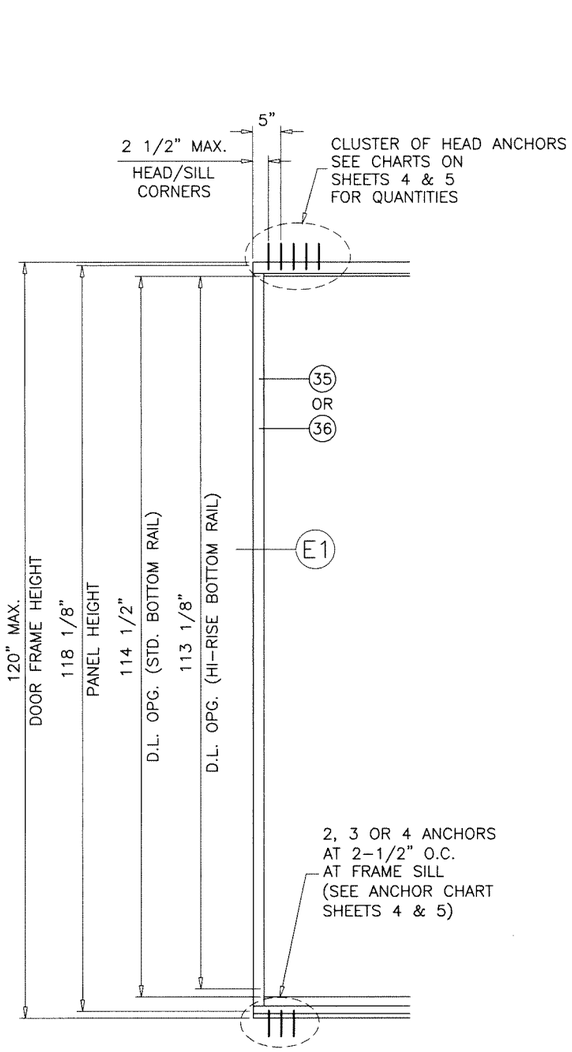

FREE STANDING JAMB OPTION W/O SIDE JAMB ANCHORS

(120" MAX. DOOR FRAME HEIGHT USING ITEMS #35 OR #36)

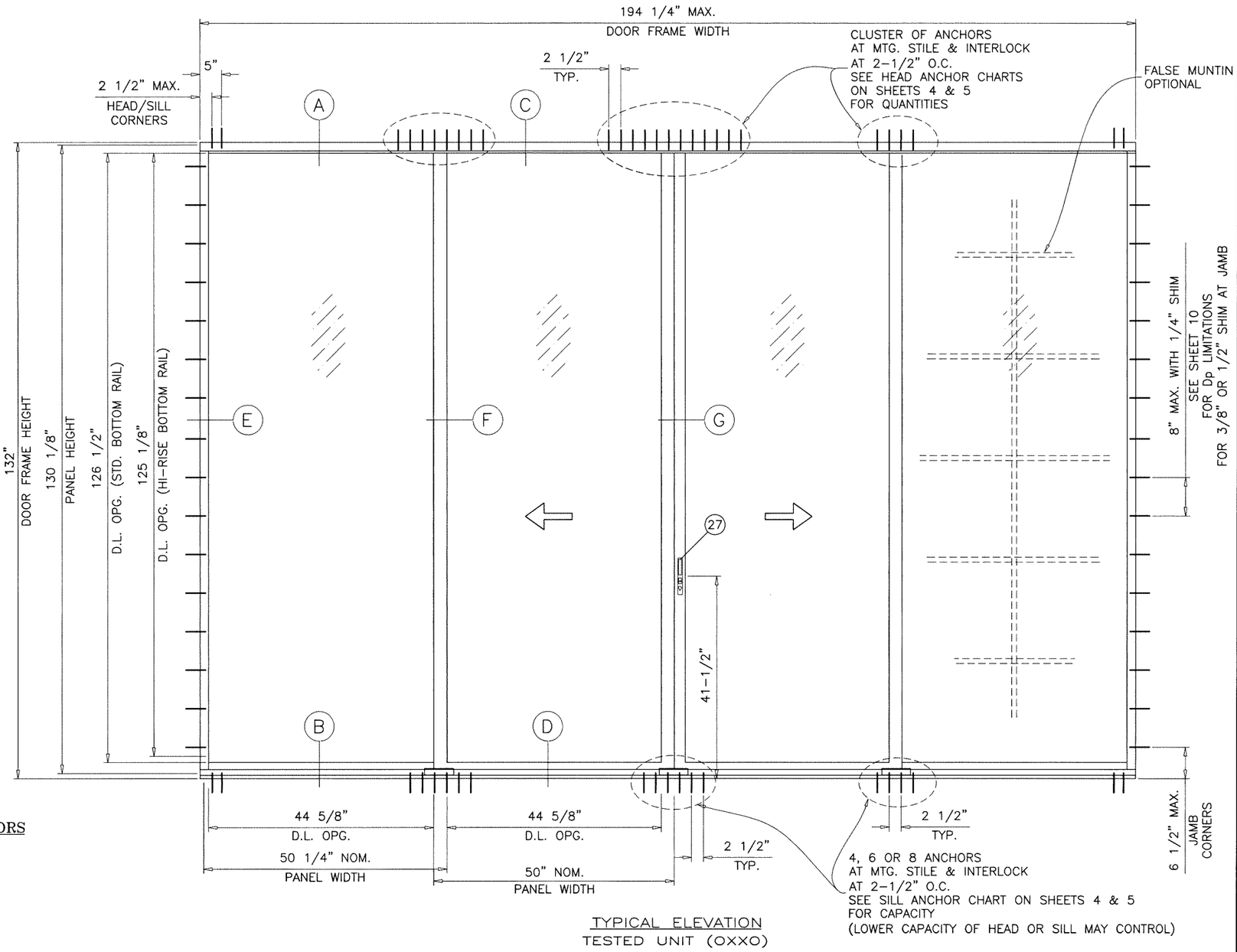

TYPICAL ELEVATION

TESTED UNIT (OXXO)

DAYLITE OPENINGS:

DLO WIDTH = FIX. PANEL WIDTH – 5.625"
DLO WIDTH = OPER. PANEL WIDTH – 5.375"
DLO HEIGHT = FRAME HEIGHT – 5.500"
PANEL HEIGHT = FRAME HEIGHT – 1.875"

ALTERNATE SIZE UNITS:
MAX. FRAME AREA OF DOORS NOT TO EXCEED
TESTED FRAME AREA OF 178 SQ. FT.

Sealed: 6/18/2026

JALAL FAROOQ LICENSE No. 81223 STATE OF FLORIDA PROFESSIONAL ENGINEER

FL #27914

AL-FAROOQ CORPORATION
ENGINEERS & PRODUCT DEVELOPMENT
9360 SUNSET DRIVE, SUITE 220
MIAMI, FLORIDA 33173 (C.A.N. 3538)
TEL. (305) 264-8100 FAX. (305) 262-6978

COMP-ANL\21-21F-TG

SERIES-2400ST ALUM SLD. GLASS DOOR (L.M.I.)

TECNOGLASS, LLC
3550 N.W. 49 STREET
MIAMI, FL. 33142
TEL. (305) 638-5158 FAX. (305) 638-5151

revisions:

no	date	by	description

date: 03-16-21
scale: 1/2"=1'-0"
dr. by: TARIQ
chk. by:

drawing no. 21-21F

DESIGN LOAD CAPACITY – PSF		
PANEL WIDTH NOMINAL INCHES	DOOR FRAME HEIGHT INCHES	9/16" GLASS EXT.(+)/INT.(–)
30	96	131.0
36		131.0
42		131.0
48		131.0
54		117.8
60		106.0
30	102	131.0
36		131.0
42		131.0
48		131.0
54		117.8
30	108	131.0
36		131.0
42		131.0
48		131.0
30	114	131.0
36		131.0
42		131.0
48		131.0
30	119–1/2	131.0
36		131.0
42		131.0
48		131.0
30	120	120.0
36		120.0
42		120.0
48		120.0
30	126	120.0
36		120.0
42		120.0
48		120.0
30	132	120.0
36		120.0
42		120.0
48		120.0

NOTE:
FOR DOORS WITH FREE STANDING JAMBS (UNANCHORED JAMBS)
LIMIT MAX. DOOR FRAME HEIGHTS TO 120 IN.

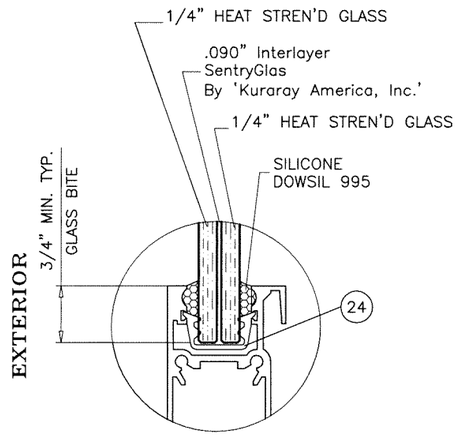

GLAZING DETAIL

NOTE:
GLASS CAPACITIES ON THIS SHEET ARE
BASED ON ASTM E1300–09 (3 SEC. GUSTS)
AND FLORIDA BUILDING COMMISSION
DECLARATORY STATEMENT DCA05–DEC–219

Sealed: 6/18/2026

JALAL FAROOQ LICENSE No. 81223 STATE OF FLORIDA PROFESSIONAL ENGINEER

FL #27914

afc
AL-FAROOQ CORPORATION
ENGINEERS & PRODUCT DEVELOPMENT
9360 SUNSET DRIVE, SUITE 220
MIAMI, FLORIDA 33173 (C.A.N. 3538)
TEL. (305) 264-8100 FAX. (305) 262-6978

COMP–ANL\21–21F–TG

SERIES–2400ST ALUM SLD. GLASS DOOR (L.M.I.)

TECNOGLASS, LLC
3550 N.W. 49 STREET
MIAMI, FL. 33142
TEL. (305) 638–5151 FAX. (305) 638–5158

revisions:

no	date	by	description

date: 03–16–21
scale: 1/2" = 1"
dr. by: TARIQ
chk. by:

drawing no. 21–21F

sheet 3 of 17

DESIGN LOAD CAPACITY – PSF (HEAD ANCHORS)

PANEL WIDTH NOMINAL INCHES	DOOR FRAME HEIGHT INCHES	ANCHORS TYPE 'A'				ANCHORS TYPE 'B'			ANCHORS TYPE 'C'		
		2 ANCHORS AT FREE STAND. JAMB	3 ANCHORS AT FREE STAND. JAMB	4 ANCHORS AT FREE STAND. JAMB	5 ANCHORS AT FREE STAND. JAMB	2 ANCHORS AT FREE STAND. JAMB	3 ANCHORS AT FREE STAND. JAMB	4 ANCHORS AT FREE STAND. JAMB	2 ANCHORS AT FREE STAND. JAMB	3 ANCHORS AT FREE STAND. JAMB	4 ANCHORS AT FREE STAND. JAMB
		4 ANCHORS AT MTG. STILE ENDS	6 ANCHORS AT MTG. STILE ENDS	8 ANCHORS AT MTG. STILE ENDS	10 ANCHORS AT MTG. STILE ENDS	4 ANCHORS AT MTG. STILE ENDS	6 ANCHORS AT MTG. STILE ENDS	8 ANCHORS AT MTG. STILE ENDS	4 ANCHORS AT MTG. STILE ENDS	6 ANCHORS AT MTG. STILE ENDS	8 ANCHORS AT MTG. STILE ENDS
		EXT. (+) INT. (–)	EXT. (+) INT. (–)	EXT. (+) INT. (–)	EXT. (+) INT. (–)	EXT. (+) INT. (–)	EXT. (+) INT. (–)	EXT. (+) INT. (–)	EXT. (+) INT. (–)	EXT. (+) INT. (–)	EXT. (+) INT. (–)
30	96	115.6	131.0	131.0	131.0	131.0	131.0	131.0	131.0	131.0	131.0
36		96.3	131.0	131.0	131.0	122.3	131.0	131.0	130.3	131.0	131.0
42		82.6	123.9	131.0	131.0	104.9	131.0	131.0	111.7	131.0	131.0
48		72.3	108.4	131.0	131.0	91.8	131.0	131.0	97.8	131.0	131.0
54		64.2	96.3	117.8	117.8	81.6	117.8	117.8	86.9	117.8	117.8
60		57.8	86.7	106.0	106.0	73.4	106.0	106.0	78.2	106.0	106.0
30	102	108.8	131.0	131.0	131.0	131.0	131.0	131.0	131.0	131.0	131.0
36		90.7	131.0	131.0	131.0	115.1	131.0	131.0	122.7	131.0	131.0
42		77.7	116.6	131.0	131.0	98.7	131.0	131.0	105.1	131.0	131.0
48		68.0	102.0	131.0	131.0	86.4	129.5	131.0	92.0	131.0	131.0
54		60.4	90.7	117.8	117.8	76.8	115.1	117.8	81.8	117.8	117.8
30	108"	102.8	131.0	131.0	131.0	130.5	131.0	131.0	131.0	131.0	131.0
36		85.6	128.4	131.0	131.0	108.7	131.0	131.0	115.9	131.0	131.0
42		73.4	110.1	131.0	131.0	93.2	131.0	131.0	99.3	131.0	131.0
48		64.2	96.3	128.4	131.0	81.6	122.3	131.0	86.9	130.3	131.0
30	114	97.3	131.0	131.0	131.0	123.6	131.0	131.0	131.0	131.0	131.0
36		81.1	121.7	131.0	131.0	103.0	131.0	131.0	109.8	131.0	131.0
42		69.5	104.3	131.0	131.0	88.3	131.0	131.0	94.1	131.0	131.0
48		60.8	91.3	121.7	131.0	77.3	115.9	131.0	82.3	123.5	131.0
30	119–1/2	92.9	131.0	131.0	131.0	117.9	131.0	131.0	125.6	131.0	131.0
36		77.4	116.1	131.0	131.0	98.3	131.0	131.0	104.7	131.0	131.0
42		66.3	99.5	131.0	131.0	84.2	131.0	131.0	89.7	131.0	131.0
48		58.0	87.1	116.1	131.0	73.7	126.4	131.0	78.5	117.8	131.0
30	120	92.5	120.0	120.0	120.0	117.4	120.0	120.0	120.0	120.0	120.0
36		77.1	115.6	120.0	120.0	97.9	120.0	120.0	104.3	120.0	120.0
42		66.1	99.1	120.0	120.0	83.9	120.0	120.0	89.4	120.0	120.0
48		57.8	86.7	115.6	120.0	73.4	110.1	120.0	78.2	117.3	120.0
30	126	88.1	120.0	120.0	120.0	111.8	120.0	120.0	119.2	120.0	120.0
36		73.4	110.1	120.0	120.0	93.2	120.0	120.0	99.3	120.0	120.0
42		62.9	94.4	120.0	120.0	79.9	119.8	120.0	85.1	120.0	120.0
48		55.0	82.6	110.1	120.0	69.9	104.9	120.0	74.5	111.7	120.0
30	132	84.1	120.0	120.0	120.0	106.8	120.0	120.0	113.7	120.0	120.0
36		70.1	105.1	120.0	120.0	89.0	120.0	120.0	94.8	120.0	120.0
42		60.1	90.1	120.0	120.0	76.3	114.4	120.0	81.2	120.0	120.0
48		52.5	78.8	105.1	120.0	66.7	100.1	120.0	71.1	106.6	120.0

DESIGN LOAD CAPACITY – PSF (SILL ANCHORS)

PANEL WIDTH NOMINAL INCHES	DOOR FRAME HEIGHT INCHES	ANCHORS TYPE 'D'		
		2 ANCHORS AT FREE STAND. JAMB	3 ANCHORS AT FREE STAND. JAMB	4 ANCHORS AT FREE STAND. JAMB
		4 ANCHORS AT MTG. STILE ENDS	6 ANCHORS AT MTG. STILE ENDS	8 ANCHORS AT MTG. STILE ENDS
		EXT. (+) INT. (–)	EXT. (+) INT. (–)	EXT. (+) INT. (–)
30	96	131.0	131.0	131.0
36		122.3	131.0	131.0
42		104.9	131.0	131.0
48		91.8	131.0	131.0
54		81.6	117.8	117.8
60		73.4	106.0	106.0
30	102	131.0	131.0	131.0
36		115.1	131.0	131.0
42		98.7	131.0	131.0
48		86.4	129.5	131.0
54		76.8	115.1	117.8
30	108"	130.5	131.0	131.0
36		108.7	131.0	131.0
42		93.2	131.0	131.0
48		81.6	122.3	131.0
30	114	123.6	131.0	131.0
36		103.0	131.0	131.0
42		88.3	131.0	131.0
48		77.3	115.9	131.0
30	119–1/2	117.9	131.0	131.0
36		98.3	131.0	131.0
42		84.2	131.0	131.0
48		73.7	126.4	131.0
30	120	117.4	120.0	120.0
36		97.9	120.0	120.0
42		83.9	120.0	120.0
48		73.4	110.1	120.0
30	126	111.8	120.0	120.0
36		93.2	120.0	120.0
42		79.9	119.8	120.0
48		69.9	104.9	120.0
30	132	106.8	120.0	120.0
36		89.0	120.0	120.0
42		76.3	114.4	120.0
48		66.7	100.1	120.0

NOTE:
1. ANCHOR CAPACITY BASED ON MAX. 1/4" SHIMS AT HEAD/SILL AND JAMBS.
2. FREE STANDING JAMB (W/O SIDE JAMB ANCHORS) LIMITED TO 120" MAX. SPAN.

NOTE:
SEE SHEET 3 FOR DESIGN LOAD CAPACITY OF DESIRED GLASS SIZE.
USE CHART ON THIS SHEET TO DETERMINE HEAD OR SILL ANCHOR CAPACITIES.
LOWER DESIGN PRESSURES FROM GLASS, HEAD OR SILL ANCHOR CHARTS WILL APPLY TO ENTIRE SYSTEM WITH 1/4" MAX. SHIM (HEAD/SILL/JAMB),
WHEN SHIM AT JAMB EXCEED 1/4" THE JAMB CHART (SHEET 10) SHALL CONTROL FOR THE ENTIRE ASSEMBLY.
SEE SHEET 9 FOR ANCHOR DESCRIPTION

Sealed: 6/18/2026

JALAL FAROOQ LICENSE No. 61223 STATE OF FLORIDA PROFESSIONAL ENGINEER

FL #27914

AL-FAROOQ CORPORATION
ENGINEERS & PRODUCT DEVELOPMENT
9360 SUNSET DRIVE, SUITE 220
MIAMI, FLORIDA 33173 (C.A.N. 3538)
TEL. (305) 264-8100 FAX. (305) 262-6978

afc

COMP-ANL\21-21F-TG

SERIES-2400ST ALUM SLD. GLASS DOOR (L.M.I.)

TECNOGLASS, LLC
3550 N.W. 49 STREET
MIAMI, FL. 33142
TEL. (305) 638-5151 FAX. (305) 638-5158

revisions:

no	date	by	description

date: 03-16-21
scale: –
dr. by: TARIQ
chk. by:

drawing no. 21–21F

DESIGN LOAD CAPACITY – PSF (HEAD ANCHORS)

PANEL WIDTH NOMINAL INCHES	DOOR FRAME HEIGHT INCHES	ANCHORS TYPE 'AA'				ANCHORS TYPE 'BB'		
		2 ANCHORS AT FREE STAND. JAMB	3 ANCHORS AT FREE STAND. JAMB	4 ANCHORS AT FREE STAND. JAMB	5 ANCHORS AT FREE STAND. JAMB	2 ANCHORS AT FREE STAND. JAMB	3 ANCHORS AT FREE STAND. JAMB	4 ANCHORS AT FREE STAND. JAMB
		4 ANCHORS AT MTG. STILE ENDS	6 ANCHORS AT MTG. STILE ENDS	8 ANCHORS AT MTG. STILE ENDS	10 ANCHORS AT MTG. STILE ENDS	4 ANCHORS AT MTG. STILE ENDS	6 ANCHORS AT MTG. STILE ENDS	8 ANCHORS AT MTG. STILE ENDS
		EXT. (+) INT. (–)	EXT. (+) INT. (–)	EXT. (+) INT. (–)	EXT. (+) INT. (–)	EXT. (+) INT. (–)	EXT. (+) INT. (–)	EXT. (+) INT. (–)
30	96	93.2	131.0	131.0	131.0	131.0	131.0	131.0
36		77.7	116.5	131.0	131.0	120.7	131.0	131.0
42		66.6	99.9	131.0	131.0	103.4	131.0	131.0
48		58.3	87.4	116.5	131.0	90.5	131.0	131.0
54		51.8	77.7	103.6	117.8	80.4	117.8	131.0
60		46.6	69.9	93.2	106.0	72.4	106.0	131.0
30	102	87.7	131.0	131.0	131.0	131.0	131.0	131.0
36		73.1	109.6	131.0	131.0	113.6	131.0	131.0
42		62.7	94.0	125.3	131.0	97.3	131.0	131.0
48		54.8	82.2	109.6	131.0	85.2	127.8	131.0
54		48.7	73.1	97.5	117.8	75.7	113.6	131.0
30	108"	82.8	124.3	131.0	131.0	128.7	131.0	131.0
36		69.0	103.6	131.0	131.0	107.3	131.0	131.0
42		59.2	88.8	118.3	131.0	91.9	131.0	131.0
48		51.8	77.7	103.6	129.4	80.4	120.7	131.0
30	114	78.5	117.7	131.0	131.0	121.9	131.0	131.0
36		65.4	98.1	130.8	131.0	101.6	131.0	131.0
42		56.1	84.1	112.1	131.0	87.1	130.6	131.0
48		49.1	73.6	98.1	122.6	76.2	114.3	131.0
30	119–1/2	74.9	112.3	131.0	131.0	116.3	131.0	131.0
36		62.4	93.6	124.8	131.0	96.9	131.0	131.0
42		53.5	80.2	107.0	131.0	83.1	124.6	131.0
48		46.8	70.2	93.6	117.0	72.7	109.1	131.0
30	120	74.6	111.8	120.0	120.0	115.8	120.0	120.0
36		62.1	93.2	120.0	120.0	96.5	120.0	120.0
42		53.3	79.9	106.5	120.0	82.7	120.0	120.0
48		46.6	69.9	93.2	116.5	72.4	108.6	120.0
30	126	71.0	106.5	120.0	120.0	110.3	120.0	120.0
36		59.2	88.8	118.3	120.0	91.9	120.0	120.0
42		50.7	76.1	101.4	120.0	78.8	118.2	120.0
48		44.4	66.6	88.8	111.0	69.0	103.4	120.0
30	132	67.8	101.7	120.0	120.0	105.3	120.0	120.0
36		56.5	84.7	113.0	120.0	87.8	120.0	120.0
42		48.4	72.6	96.8	120.0	75.2	112.8	120.0
48		42.4	63.5	84.7	105.9	65.8	98.7	120.0

DESIGN LOAD CAPACITY – PSF (SILL ANCHORS)

PANEL WIDTH NOMINAL INCHES	DOOR FRAME HEIGHT INCHES	ANCHORS TYPE 'DD'		
		2 ANCHORS AT FREE STAND. JAMB	3 ANCHORS AT FREE STAND. JAMB	4 ANCHORS AT FREE STAND. JAMB
		4 ANCHORS AT MTG. STILE ENDS	6 ANCHORS AT MTG. STILE ENDS	8 ANCHORS AT MTG. STILE ENDS
		EXT. (+) INT. (–)	EXT. (+) INT. (–)	EXT. (+) INT. (–)
30	96	131.0	131.0	131.0
36		120.7	131.0	131.0
42		103.4	131.0	131.0
48		90.5	131.0	131.0
54		80.4	117.8	131.0
60		72.4	106.0	131.0
30	102	131.0	131.0	131.0
36		113.6	131.0	131.0
42		97.3	131.0	131.0
48		85.2	127.8	131.0
54		75.7	113.6	131.0
30	108"	128.7	131.0	131.0
36		107.3	131.0	131.0
42		91.9	131.0	131.0
48		80.4	120.7	131.0
30	114	121.9	131.0	131.0
36		101.6	131.0	131.0
42		87.1	130.6	131.0
48		76.2	114.3	131.0
30	119–1/2	116.3	131.0	131.0
36		96.9	131.0	131.0
42		83.1	124.6	131.0
48		72.7	109.1	131.0
30	120	115.8	120.0	120.0
36		96.5	120.0	120.0
42		82.7	120.0	120.0
48		72.4	108.6	120.0
30	126	110.3	120.0	120.0
36		91.9	120.0	120.0
42		78.8	118.2	120.0
48		69.0	103.4	120.0
30	132	105.3	120.0	120.0
36		87.8	120.0	120.0
42		75.2	112.8	120.0
48		65.8	98.7	120.0

NOTE:
1. ANCHOR CAPACITY BASED ON MAX. 1/4" SHIMS AT HEAD/SILL AND JAMBS.
2. FREE STANDING JAMB (W/O SIDE JAMB ANCHORS) LIMITED TO 120" MAX. SPAN.

NOTE:
SEE SHEET 3 FOR DESIGN LOAD CAPACITY OF DESIRED GLASS SIZE.
USE CHART ON THIS SHEET TO DETERMINE HEAD OR SILL ANCHOR CAPACITIES.
LOWER DESIGN PRESSURES FROM GLASS, HEAD OR SILL ANCHOR CHARTS WILL APPLY TO ENTIRE SYSTEM WITH 1/4" MAX. SHIM (HEAD/SILL/JAMB),
WHEN SHIM AT JAMB EXCEED 1/4" THE JAMB CHART (SHEET 10) SHALL CONTROL FOR THE ENTIRE ASSEMBLY.
SEE SHEET 9 FOR ANCHOR DESCRIPTION

Sealed: 6/18/2026

JALAL FAROOQ LICENSE No. 81223 STATE OF FLORIDA PROFESSIONAL ENGINEER

FL #27914

AL-FAROOQ CORPORATION
ENGINEERS & PRODUCT DEVELOPMENT
9360 SUNSET DRIVE, SUITE 220
MIAMI, FLORIDA 33173 (C.A.N. 3538)
TEL. (305) 264-8100 FAX. (305) 262-6978

COMP–ANL\21–21F–TG

SERIES–2400ST ALUM SLD. GLASS DOOR (L.M.I.)

TECNOGLASS, LLC
3550 N.W. 49 STREET
MIAMI, FL. 33142
TEL. (305) 638–5151 FAX. (305) 638–5158

revisions:

no	date	by	description

date: 03–16–21
scale: –
dr. by: TARIQ
chk. by:

drawing no. 21–21F

CONFIGURATIONS SHOWN FOR ILLUSTRATION PURPOSES ONLY
SEE SHEETS 7 THRU 11 FOR FRAME ANCHOR INSTALLATIONS.

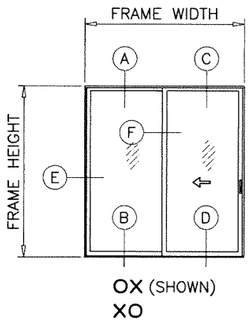

OX (SHOWN)
XO

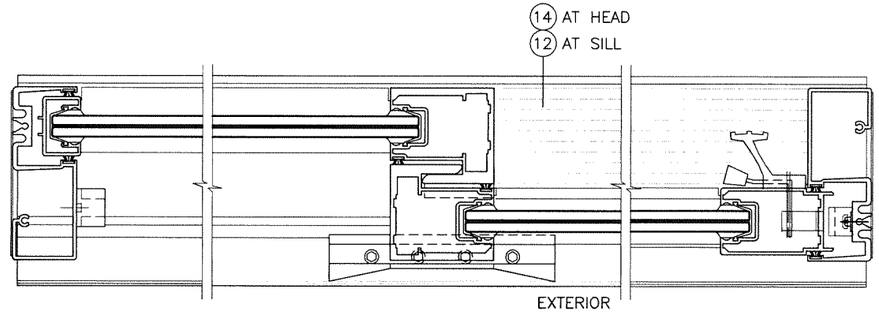

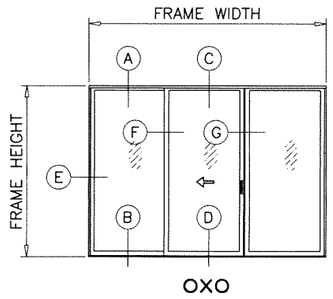

OXO

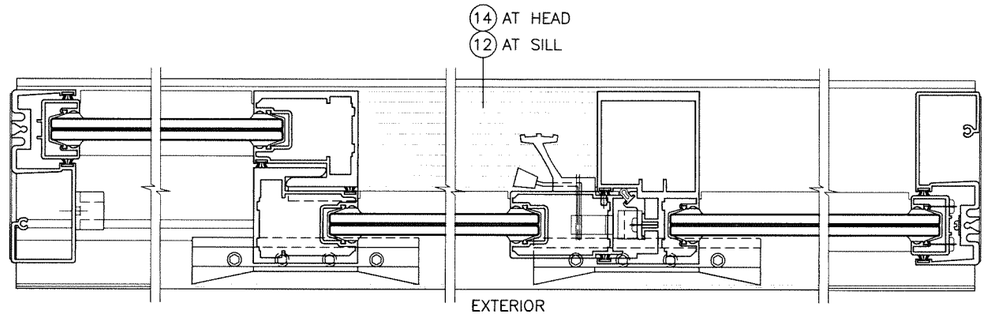

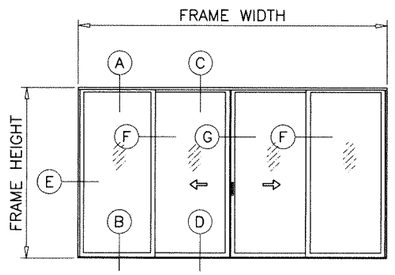

OXXO

APPROVED CONFIGURATIONS
(4 PANELS OR LESS)

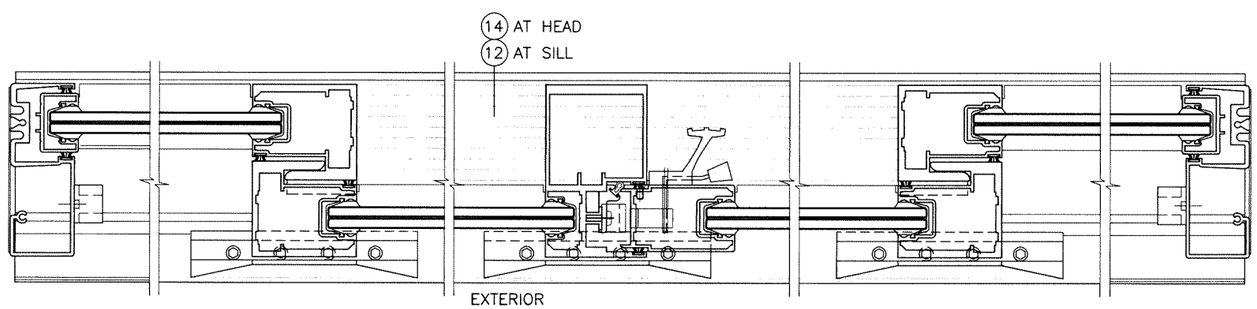

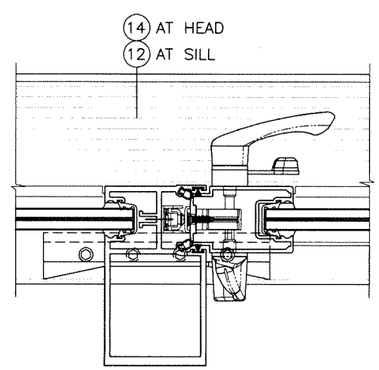

Sealed: 6/18/2026

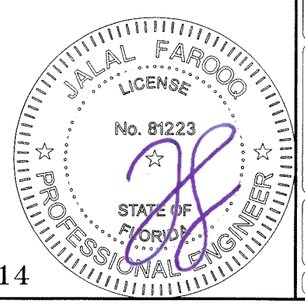

FL #27914

AL-FAROOQ CORPORATION
ENGINEERS & PRODUCT DEVELOPMENT
9360 SUNSET DRIVE, SUITE 220
MIAMI, FLORIDA 33173 (C.A.N. 3538)
TEL. (305) 264-8100 FAX. (305) 262-6978

COMP-ANL\21-21F-TG

SERIES-2400ST ALUM SLD. GLASS DOOR (L.M.I.)

TECNOGLASS, LLC
3550 N.W. 49 STREET
MIAMI, FL. 33142
TEL. (305) 638-5151 FAX. (305) 638-5158

revisions:

no	date	by	description

date: 03-16-21
scale: –
dr. by: TARIQ
chk. by:

drawing no.
21-21F

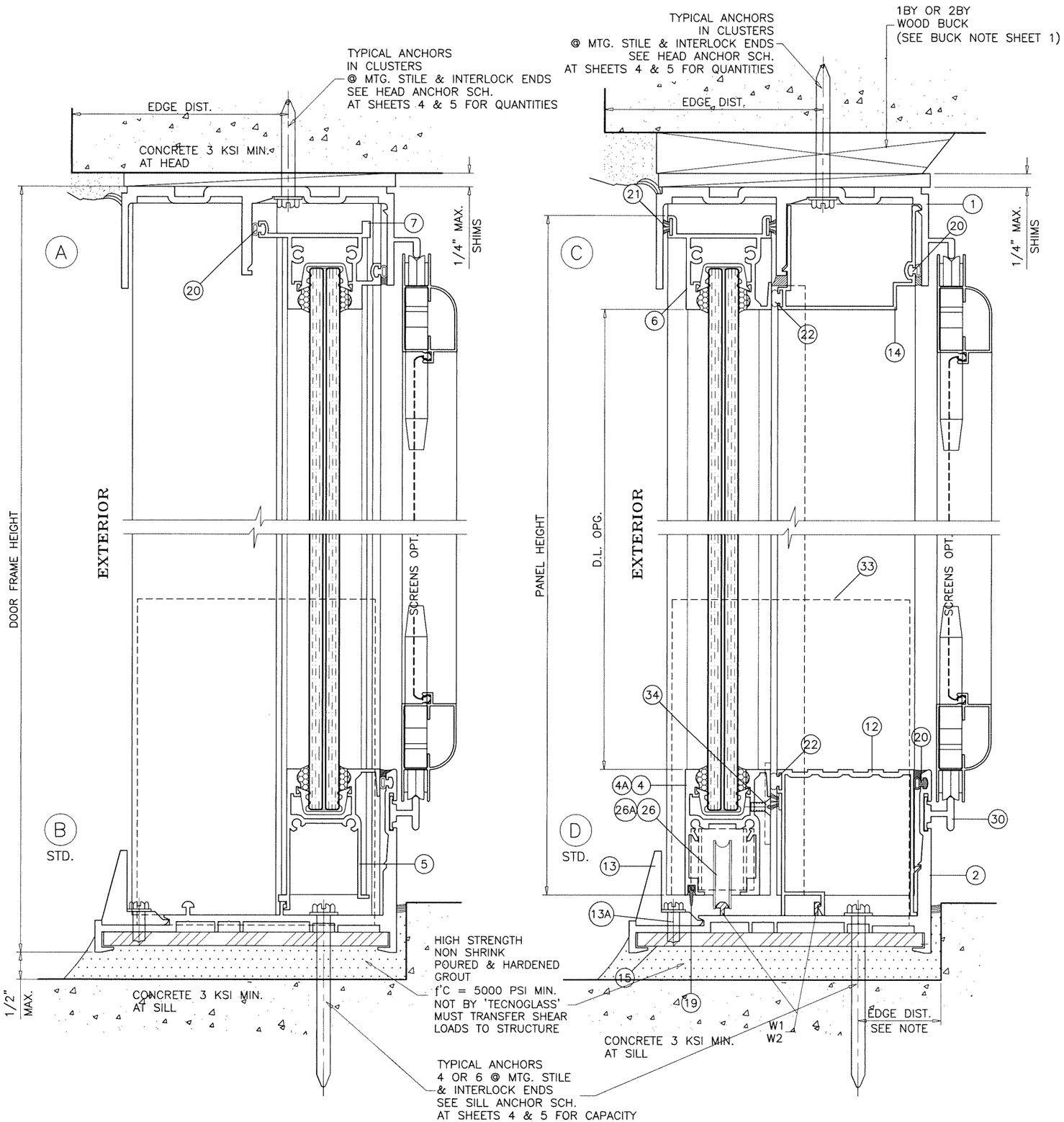

WEEPS:

W1 = 2-1/2" WEEP NOTCH AT SILL CENTER
W2 = 1" NOTCH AT EACH END

Sealed: 6/18/2026

FL #27914

AL-FAROOQ CORPORATION
ENGINEERS & PRODUCT DEVELOPMENT
9360 SUNSET DRIVE, SUITE 220
MIAMI, FLORIDA 33173 (C.A.N. 3538)
TEL. (305) 264-8100 FAX. (305) 262-6978
COMP-ANL\21-21F-TG

SERIES-2400ST ALUM SLD. GLASS DOOR (L.M.I.)

TECNOGLASS, LLC
3550 N.W. 49 STREET
MIAMI, FL. 33142
TEL. (305) 638-5151 FAX. (305) 638-5158

revisions:

no	date	by	description

date: 03-16-21
scale: 1/2" = 1"
dr. by: TARIQ
chk. by:

drawing no.
21-21F

sheet 7 of 17

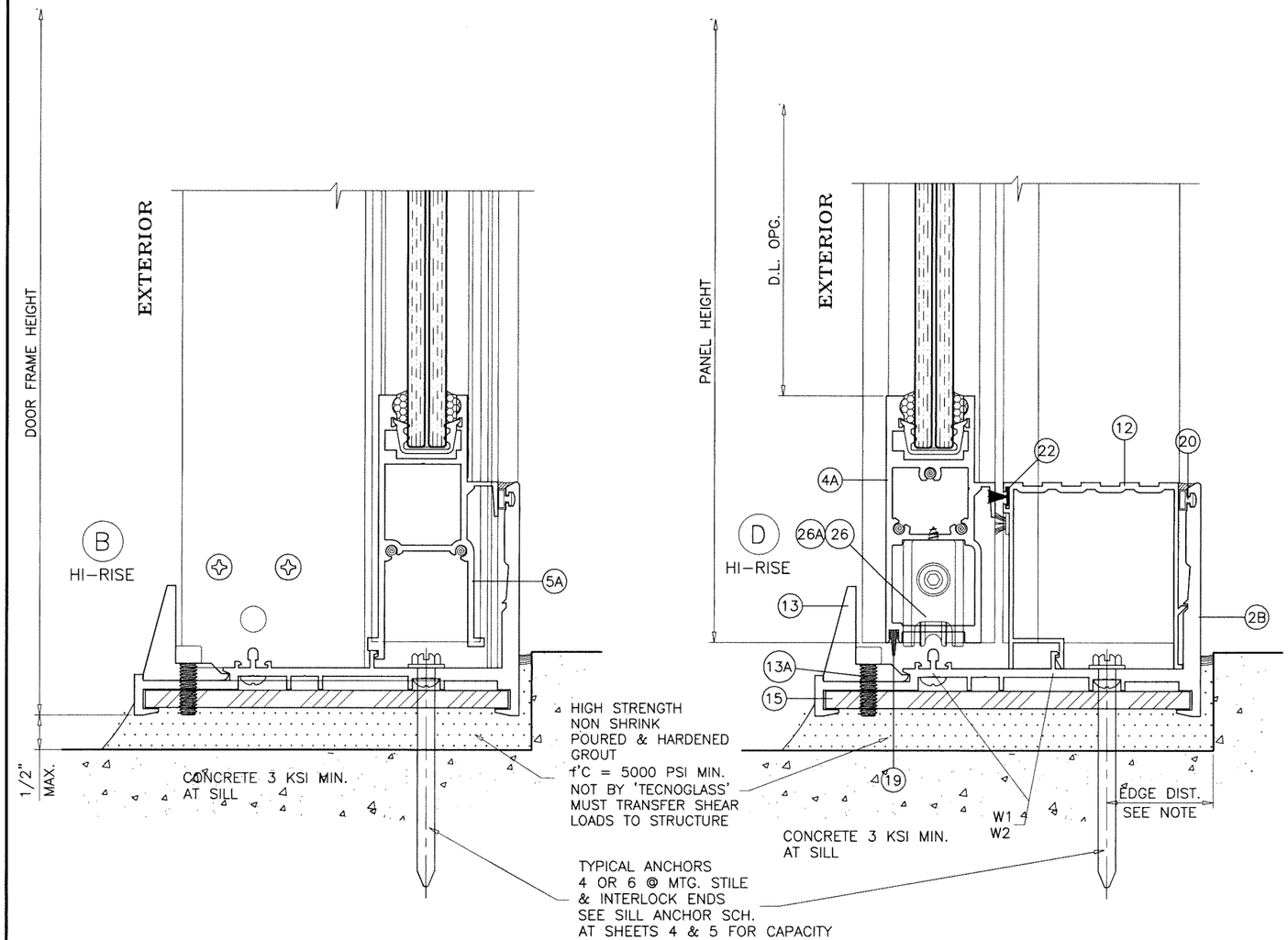

Sealed: 6/18/2026

FL #27914

JALAL FAROOQ LICENSE No. 81223 STATE OF FLORIDA PROFESSIONAL ENGINEER

AL-FAROOQ CORPORATION
ENGINEERS & PRODUCT DEVELOPMENT
9360 SUNSET DRIVE, SUITE 220
MIAMI, FLORIDA 33173 *(C.A.N. 3538)*
TEL. (305) 264-8100 FAX. (305) 262-6978

COMP-ANL\21-21F-TG

SERIES-2400ST ALUM SLD. GLASS DOOR (L.M.I.)

TECNOGLASS, LLC
3550 N.W. 49 STREET
MIAMI, FL. 33142
TEL. (305) 638-5151 FAX. (305) 638-5158

revisions:			
no	date	by	description

date: 03-16-21
scale: 1/2" = 1"
dr. by: TARIQ
chk. by:

drawing no. 21-21F

sheet 8 of 17

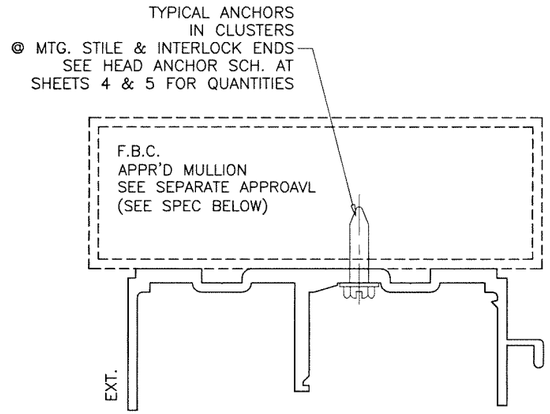

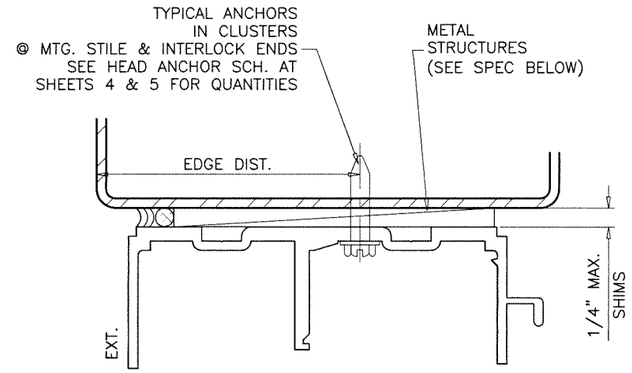

1BY OR 2BY WOOD BUCKS AND METAL STRUCTURES NOT BY 'TECNOGLASS' MUST SUPPORT LOADS IMPOSED BY GLAZING SYSTEM AND TRANSFER THEM TO THE BUILDING STRUCTURE.

TYPICAL ANCHORS: SEE ELEV. FOR SPACING

AT HEAD

TYPE 'A'– 1/4" X 2-3/4" KWIK-CON II+ BY 'HILTI' (Fu=138 KSI, Fy=137 KSI)
THRU 1BY OR 2BY WOOD BUCKS INTO CONCRETE
1-1/4" MIN. CONCRETE EMBEDMENT

TYPE 'B'– 1/4" X 2-3/4" KWIK-CON II+ BY 'HILTI' (Fu=138 KSI, Fy=137 KSI)
DIRECTLY INTO CONCRETE, 2" MIN. EMBEDMENT

TYPE 'C'– 1/4" DIA. TEKS OR SELF-DRILLING SCREWS (GRADE 5 CRS)
INTO METAL STRUCTURES OR APPROVED MULLIONS
(3) THREADS MIN. TO EXTEND BEYOND METAL THICKNESS
ALUMINUM: 1/8" THK. MIN. (6063-T5 MIN.)
STEEL: 1/8" THK. MIN. (Fy = 36 KSI MIN.)
(STEEL IN CONTACT WITH ALUMINUM TO BE PLATED OR PAINTED)

AT HEAD

TYPE 'AA'– 1/4" DIA. ULTRACON+ BY 'DEWALT' (Fu=164 KSI, Fy=148 KSI)
THRU 1BY OR 2BY WOOD BUCKS INTO CONCRETE
1-1/4" MIN. CONCRETE EMBEDMENT

TYPE 'BB'– 1/4" DIA. ULTRACON+ BY 'DEWALT' (Fu=164 KSI, Fy=148 KSI)
DIRECTLY INTO CONCRETE, 1-3/4" MIN. EMBEDMENT

AT SILL

TYPE 'D'– 1/4" DIA. KWIK-CON II+ BY 'HILTI' (Fu=138 KSI, Fy=137 KSI)
DIRECTLY INTO CONCRETE, 2" MIN. EMBEDMENT

AT JAMBS

TYPE 'A'– 1/4" X 2-3/4" KWIK-CON II+ BY 'HILTI' (Fu=138 KSI, Fy=137 KSI)
THRU 1BY BUCKS INTO CONCRETE OR BLOCKS
1-1/4" MIN. EMBEDMENT INTO CONC. OR GROUT-FILLED BLOCKS

TYPE 'A'– 1/4" X 2-3/4" KWIK-CON II+ BY 'HILTI' (Fu=138 KSI, Fy=137 KSI)
INTO 2BY BUCKS OR WOOD STRUCTURE
1-1/2" MIN. PENETRATION INTO WOOD

TYPE 'B'– 1/4" X 2-3/4" KWIK-CON II+ BY 'HILTI' (Fu=138 KSI, Fy=137 KSI)
DIRECTLY INTO CONCRETE OR BLOCKS
2" MIN. EMBEDMENT INTO CONC. OR GROUT-FILLED BLOCKS

TYPE 'C'– 1/4" DIA. TEKS OR SELF-DRILLING SCREWS (GRADE 5 CRS)
INTO METAL STRUCTURES OR APPROVED MULLIONS
(3) THREADS MIN. TO EXTEND BEYOND METAL THICKNESS
ALUMINUM: 1/8" THK. MIN. (6063-T5 MIN.)
STEEL: 1/8" THK. MIN. (Fy = 36 KSI MIN.)
(STEEL IN CONTACT WITH ALUMINUM TO BE PLATED OR PAINTED)

AT SILL

TYPE 'DD'– 1/4" DIA. ULTRACON+ BY 'DEWALT' (Fu=164 KSI, Fy=148 KSI)
DIRECTLY INTO CONCRETE, 1-3/4" MIN. EMBEDMENT

AT JAMBS

TYPE 'AA'– 1/4" DIA. ULTRACON+ BY 'DEWALT' (Fu=164 KSI, Fy=148 KSI)
THRU 1BY BUCKS INTO CONCRETE OR BLOCKS
1-1/4" MIN. EMBEDMENT INTO CONC. OR GROUT-FILLED BLOCKS

TYPE 'AA'– 1/4" DIA. ULTRACON+ BY 'DEWALT' (Fu=164 KSI, Fy=148 KSI)
INTO 2BY BUCKS OR WOOD STRUCTURE
1-1/2" MIN. PENETRATION INTO WOOD

TYPE 'BB'– 1/4" DIA. ULTRACON+ BY 'DEWALT' (Fu=164 KSI, Fy=148 KSI)
DIRECTLY INTO CONCRETE OR BLOCKS
1-3/4" MIN. EMBEDMENT INTO CONC. OR GROUT-FILLED BLOCKS

Sealed: 6/18/2026

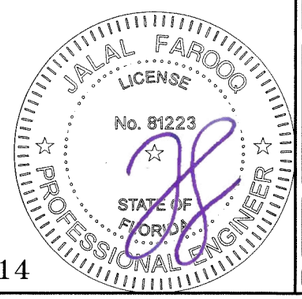

FL #27914

TYPICAL EDGE DISTANCE

INTO CONCRETE AND MASONRY = 2-1/2" MIN.
INTO WOOD STRUCTURE = 1" MIN.
INTO METAL STRUCTURE = 3/4" MIN.

WOOD AT HEAD OR JAMBS SG = 0.55 MIN.
CONCRETE AT HEAD, SILL OR JAMBS f'c = 3000 PSI MIN.
C-90 FILLED BLOCK AT JAMBS f'm = 2000 PSI MIN.

AL-FAROOQ CORPORATION
ENGINEERS & PRODUCT DEVELOPMENT
9360 SUNSET DRIVE, SUITE 220
MIAMI, FLORIDA 33173 (C.A.N. 3538)
TEL. (305) 264-8100 FAX. (305) 262-6978

COMP-ANL\21-21F-TG

SERIES-2400ST ALUM SLD. GLASS DOOR (L.M.I.)

TECNOGLASS, LLC
3550 N.W. 49 STREET
MIAMI, FL. 33142
TEL. (305) 638-5151 FAX. (305) 638-5158

revisions:

no	date	by	description

date: 03-16-21
scale: 1/2" = 1"
dr. by: TARIQ
chk. by:

drawing no. 21-21F

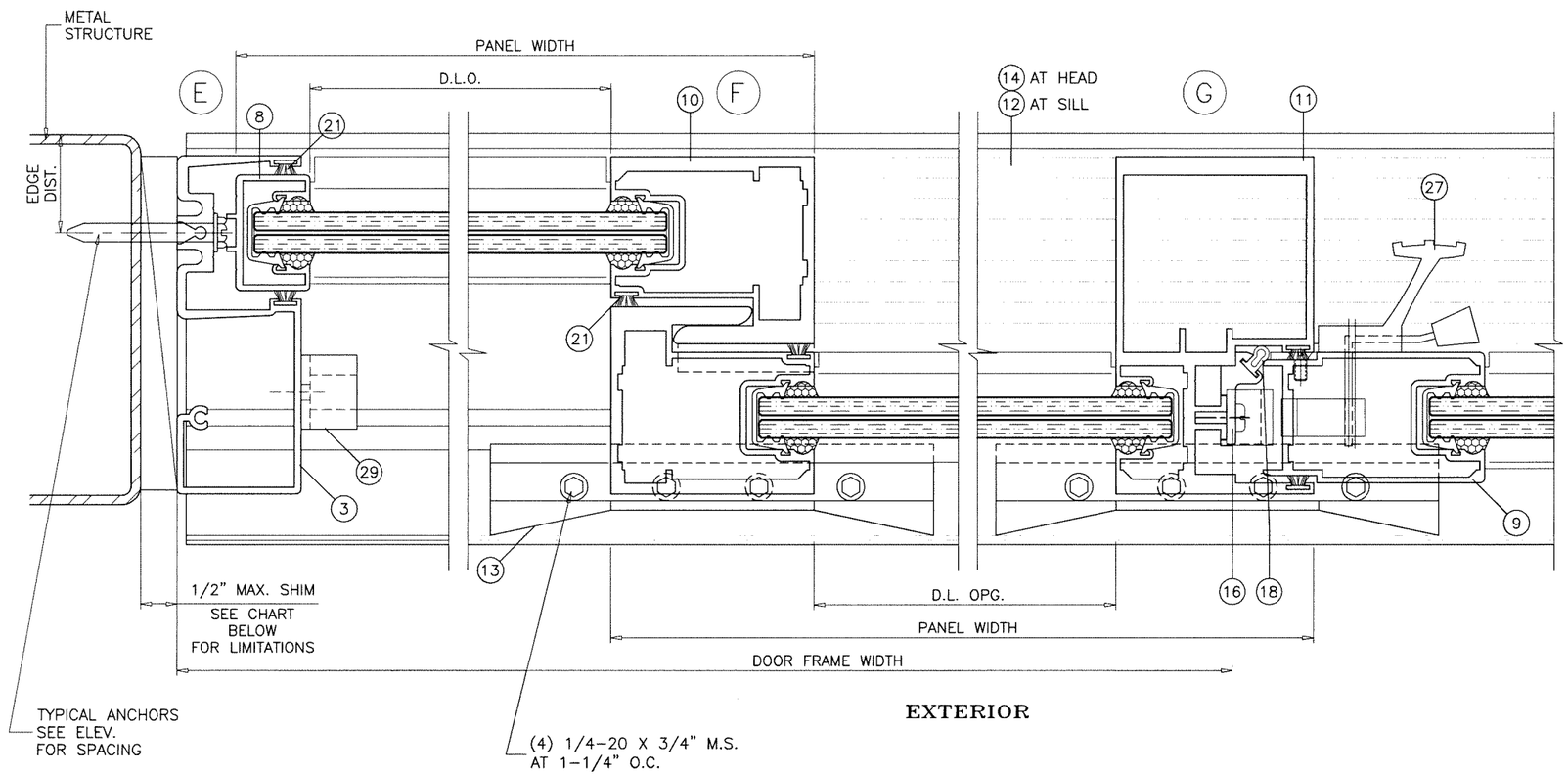

EXTERIOR

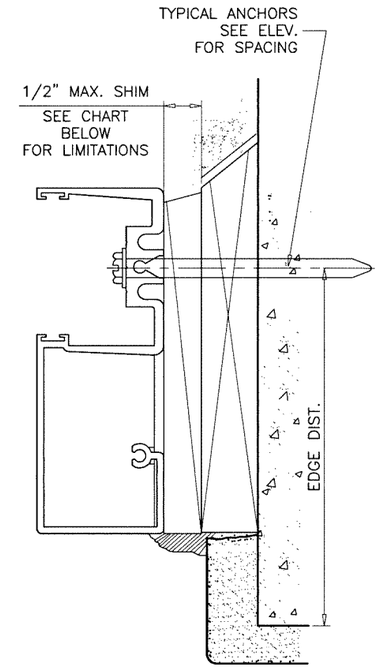

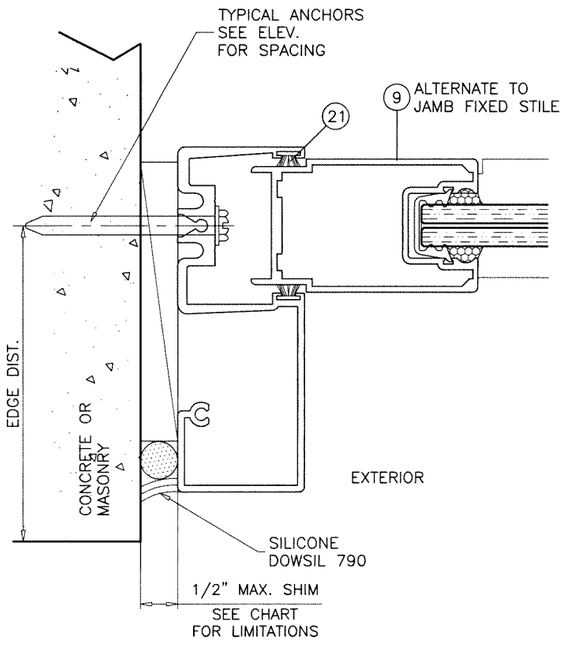

ANCHOR TYPES 'A', 'B', 'C'		
LIMIT MAX. DESIGN LOADS AS SHOWN FOR DOORS WITH 1/2" AND 3/8" SHIMS		
PANEL WIDTH NOMINAL INCHES	1/2" SHIMS EXT. (+) INT. (−)	3/8" SHIMS EXT. (+) INT. (−)
30	131.0	131.0
36	120.0	131.0
42	102.9	131.0
48	90.0	114.8
54	80.0	102.0
60	72.0	91.8

JAMB ANCHOR CAPACITY WITH SHIM > 1/4"

ANCHOR TYPES 'AA', 'BB'		
LIMIT MAX. DESIGN LOADS AS SHOWN FOR DOORS WITH 1/2" AND 3/8" SHIMS		
PANEL WIDTH NOMINAL INCHES	1/2" SHIMS EXT. (+) INT. (−)	3/8" SHIMS EXT. (+) INT. (−)
30	124.6	131.0
36	103.9	131.0
42	89.0	114.0
48	77.9	99.7
54	69.2	88.6
60	62.3	79.8

JAMB ANCHOR CAPACITY WITH SHIM > 1/4"

NOTE:
THIS CHART TO BE USED IN CONJUNCTION WITH HEAD/SILL ANCHOR CAPACITY (SHEETS 4 & 5), LOWER DESIGN PRESSURE FROM GLASS, HEAD/SILL ANCHOR OR JAMB ANCHOR CHART SHALL CONTROL THE ENTIRE SYSTEM.

Sealed: 6/18/2026

FL #27914

AL-FAROOQ CORPORATION
ENGINEERS & PRODUCT DEVELOPMENT
9360 SUNSET DRIVE, SUITE 220
MIAMI, FLORIDA 33173 (C.A.N. 3538)
TEL. (305) 264-8100 FAX. (305) 262-6978

COMP-ANL\21-21F-TG

SERIES-2400ST ALUM SLD. GLASS DOOR (L.M.I.)

TECNOGLASS, LLC
3550 N.W. 49 STREET
MIAMI, FL. 33142
TEL. (305) 638-5158 FAX. (305) 638-5151

revisions:

no	date	by	description

date: 03-16-21
scale: 1/2" = 1"
dr. by: TARIQ
chk. by:

drawing no. 21-21F

sheet 10 of 17

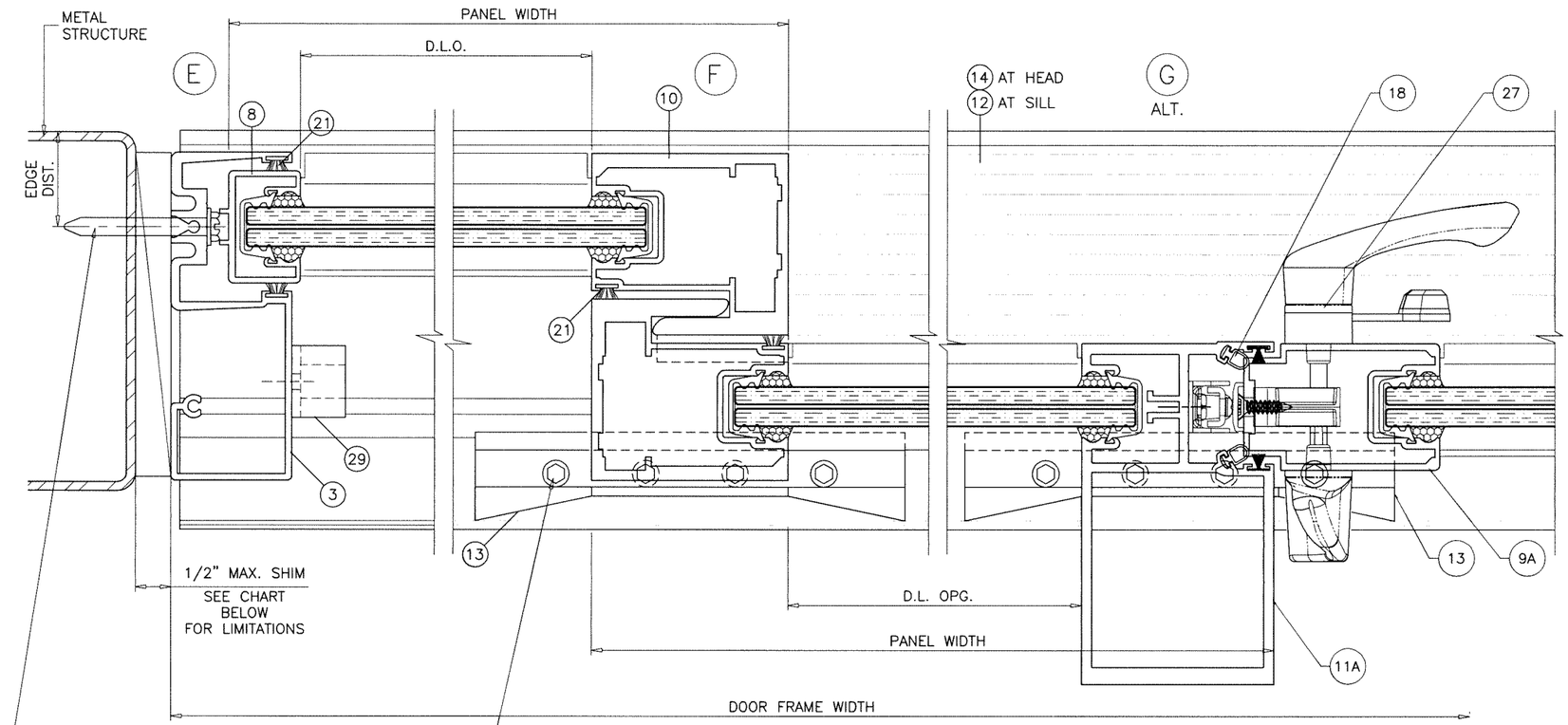

EXTERIOR

Sealed: 6/18/2026

FL #27914

AL-FAROOQ CORPORATION
ENGINEERS & PRODUCT DEVELOPMENT
9360 SUNSET DRIVE, SUITE 220
MIAMI, FLORIDA 33173 (C.A.N. 3538)
TEL. (305) 264-8100 FAX. (305) 262-6978

COMP-ANL\21-21F-TG

SERIES-2400ST ALUM SLD. GLASS DOOR (L.M.I.)

TECNOGLASS, LLC
3550 N.W. 49 STREET
MIAMI, FL. 33142
TEL. (305) 638-5151 FAX. (305) 638-5158

revisions:

no	date	by	description

date: 03-16-21
scale: 1/2" = 1"
dr. by: TARIQ
chk. by:

drawing no. 21-21F

sheet 11 of 17

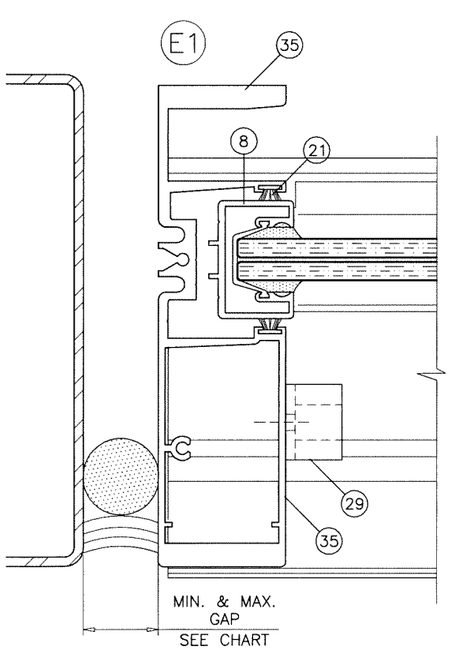

FREE STANDING JAMB
FIXED SIDE

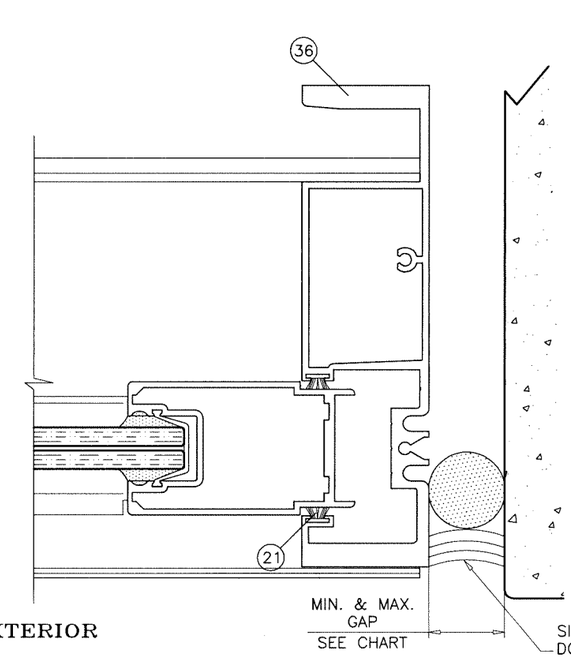

EXTERIOR

FREE STANDING JAMB
OPERABLE SIDE

MAX. FRAME HEIGHT	GAP	
	MIN.	MAX.
84"	7/16"	3/4"
120"	1/2"	3/4"

Sealed: 6/18/2026

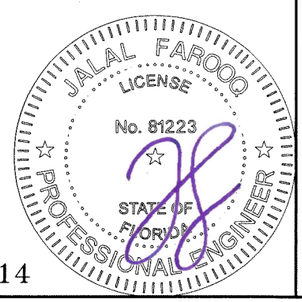

FL #27914

AL-FAROOQ CORPORATION
ENGINEERS & PRODUCT DEVELOPMENT
9360 SUNSET DRIVE, SUITE 220
MIAMI, FLORIDA 33173 (C.A.N. 3538)
TEL. (305) 264-8100 FAX. (305) 262-6978

COMP-ANL\21-21F-TG

SERIES-2400ST ALUM SLD. GLASS DOOR (L.M.I.)

TECNOGLASS, LLC
3550 N.W. 49 STREET
MIAMI, FL. 33142
TEL. (305) 638-5151 FAX. (305) 638-5158

revisions:

no	date	by	description

date: 03-16-21
scale: 1/2" = 1"
dr. by: TARIQ
chk. by:

drawing no.
21-21F

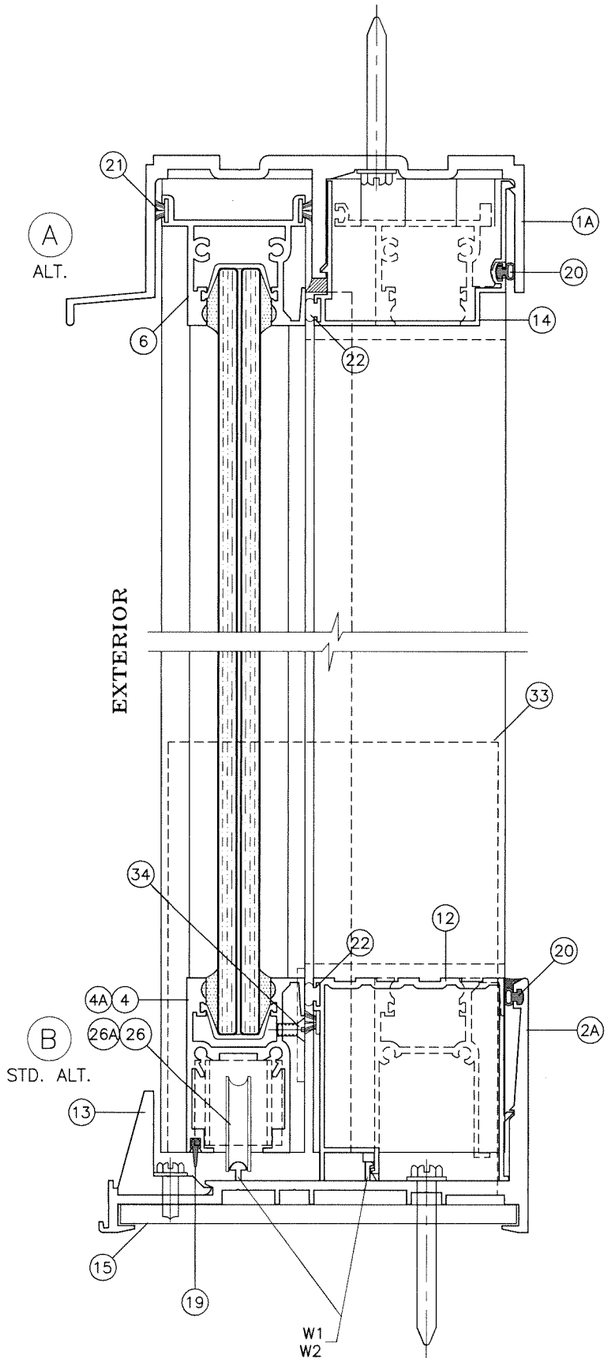

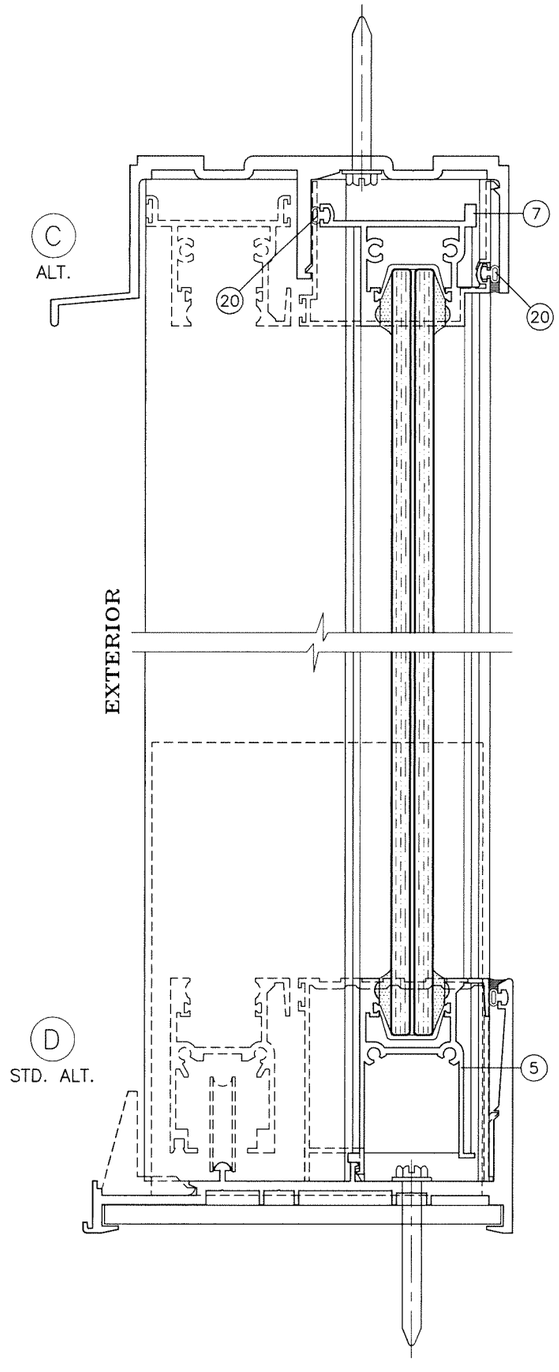

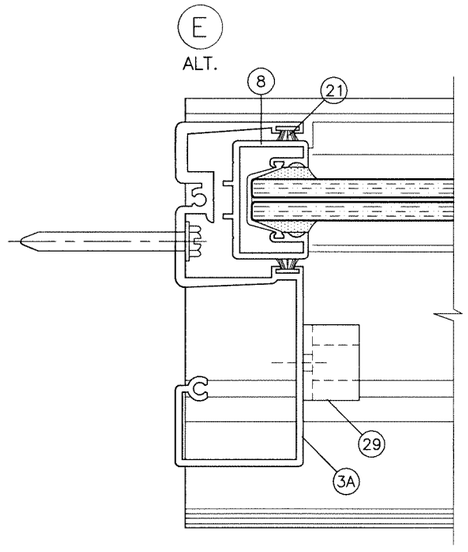

ILLUSTRATED ALTERNATE DOOR FRAMES

THIS SHEET SHOWS ALTERNATE DOOR FRAMES WITH OUTSIDE SCREEN OPTION.
HEAD/SILL/JAMB INSTALLATION FOR THESE FRAMES IS IDENTICAL TO
STANDARD FRAMES INSTALLATION AS SHOWN ON SHEETS 7 THRU 11.

Sealed: 6/18/2026

JALAL FAROOQ LICENSE No. 81223 STATE OF FLORIDA PROFESSIONAL ENGINEER

FL #27914

AL-FAROOQ CORPORATION
ENGINEERS & PRODUCT DEVELOPMENT
9360 SUNSET DRIVE, SUITE 220
MIAMI, FLORIDA 33173 (C.A.N. 3538)
TEL. (305) 264-8100 FAX. (305) 262-6978

COMP-ANL\21-21F-TG

SERIES-2400ST ALUM SLD. GLASS DOOR (L.M.I.)

TECNOGLASS, LLC
3550 N.W. 49 STREET
MIAMI, FL. 33142
TEL. (305) 638-5151 FAX. (305) 638-5158

revisions:		
no	date	by description

date: 03-16-21
scale: 1/2" = 1"
dr. by: TARIQ
chk. by:

drawing no. 21-21F

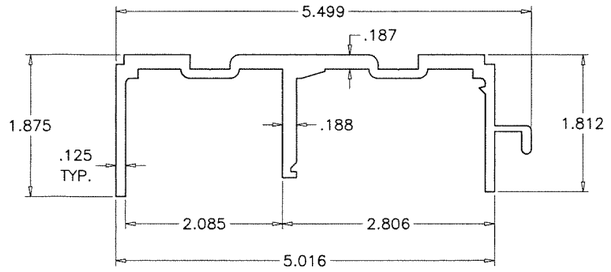

(1) FRAME HEAD

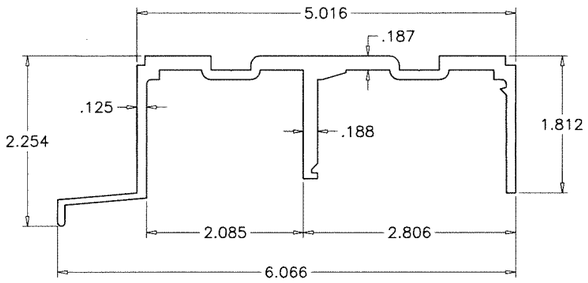

(1A) ALT. FRAME HEAD

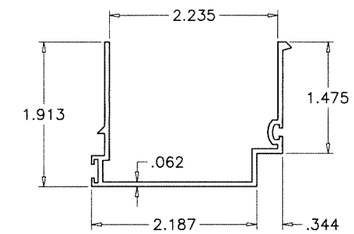

(14) HEAD ADAPTER

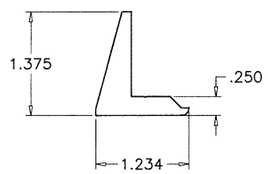

(13) SILL ANCHOR

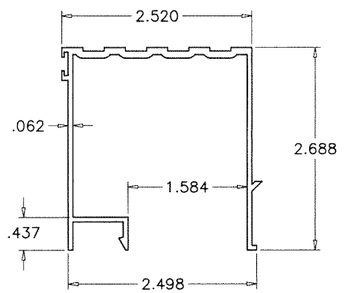

(12) THRESHOLD

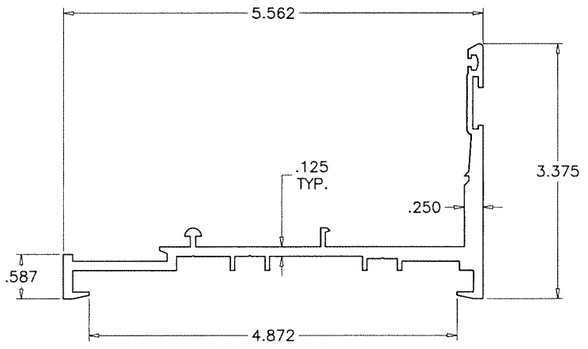

(2) FRAME SILL

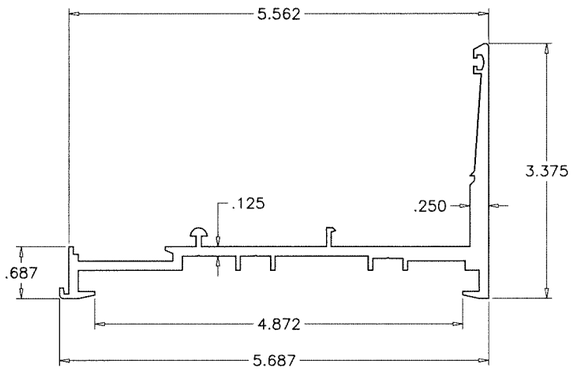

(2A) ALT. FRAME SILL

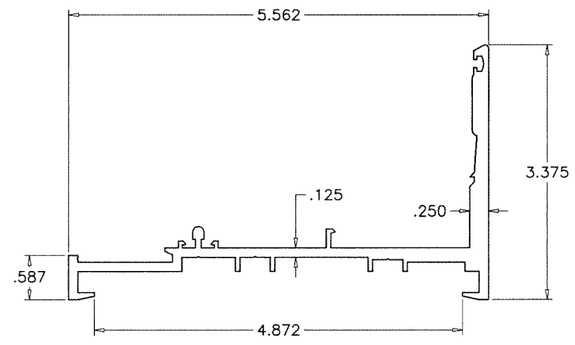

(2B) ALT. FRAME SILL

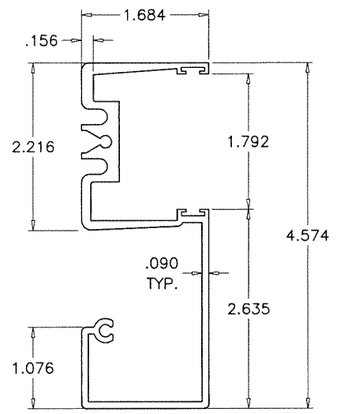

(3) FRAME JAMB

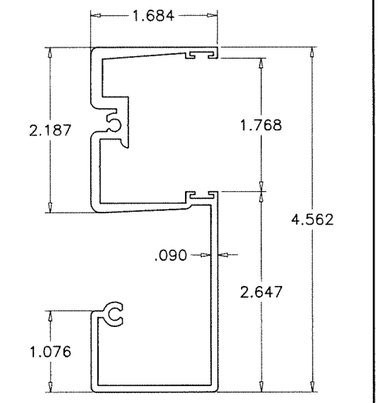

(3A) ALT. FRAME JAMB

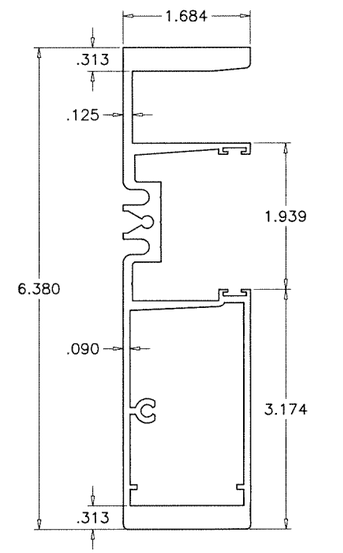

Ix IN^4	Sx IN^3
13.025	4.031

(35) FREE STANDING FRAME JAMB FIXED SIDE

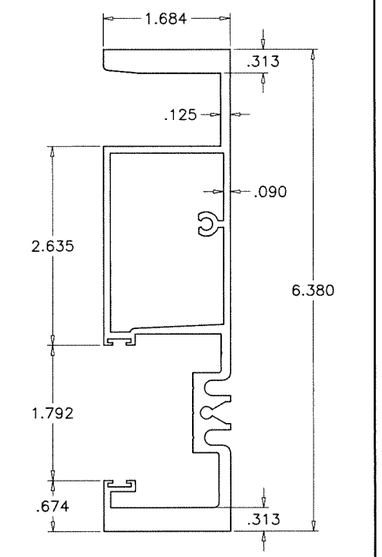

Ix IN^4	Sx IN^3
13.336	4.051

(36) FREE STANDING FRAME JAMB OPERABLE SIDE

Sealed: 6/18/2026

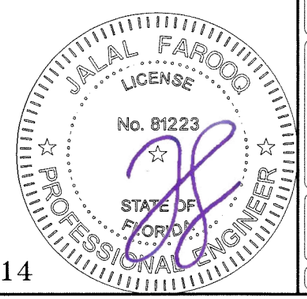

FL #27914

AL-FAROOQ CORPORATION
ENGINEERS & PRODUCT DEVELOPMENT
9360 SUNSET DRIVE, SUITE 220
MIAMI, FLORIDA 33173 (C.A.N. 3538)
TEL. (305) 264-8100 FAX. (305) 262-6978

COMP-ANL\21-21F-TG

SERIES-2400ST ALUM SLD. GLASS DOOR (L.M.I.)

TECNOGLASS, LLC
3550 N.W. 49 STREET
MIAMI, FL. 33142
TEL. (305) 638-5151 FAX. (305) 638-5158

revisions:

no	date	by	description

date: 03-16-21
scale: 1/2" = 1"
dr. by: TARIQ
chk. by:

drawing no. 21-21F

sheet 14 of 17

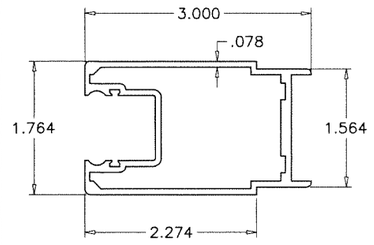

(9) LOCK STILE

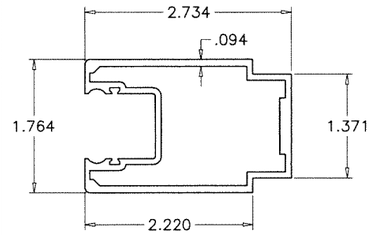

(9A) ALT. LOCK STILE

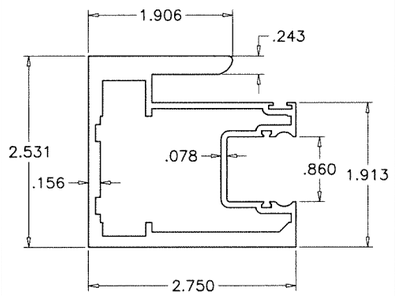

(10) INTERLOCK

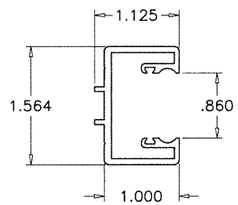

(8) FIXED STILE

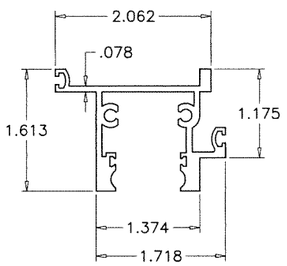

(7) FIX. TOP RAIL

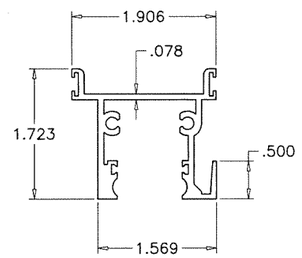

(6) MOV. TOP RAIL

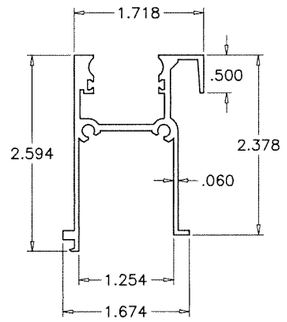

(5) STD. FIX. BOTTOM RAIL

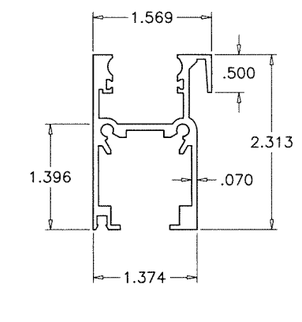

(4) STD. MOVING BOTTOM RAIL

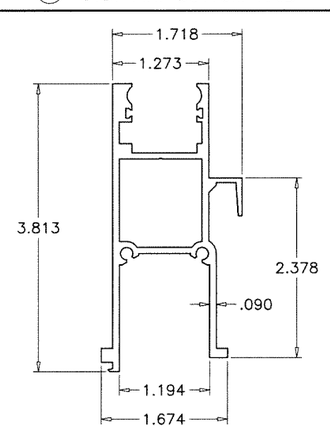

(5A) HI–RISE FIX. BOTTOM RAIL

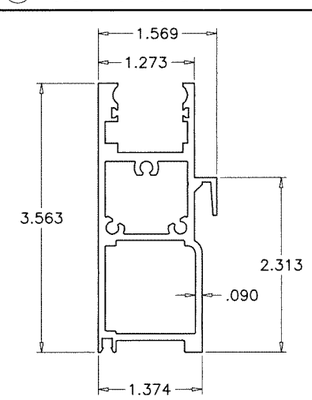

(4A) HI–RISE MOVING BOTTOM RAIL

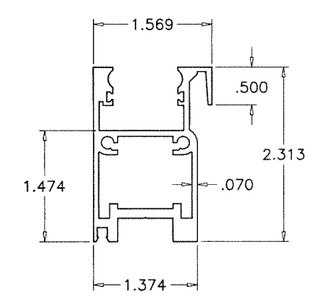

(4B) ALT. STD. MOVING BOTTOM RAIL

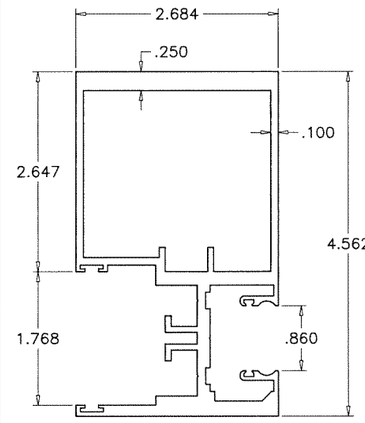

(11) ASTRAGAL STILE

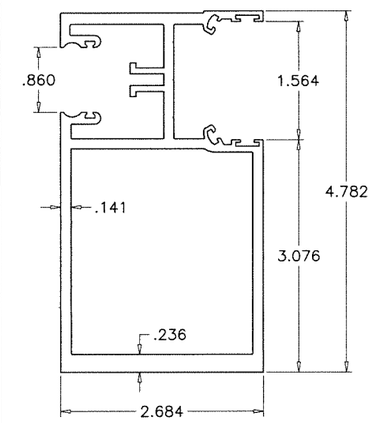

(11A) REVERSE ASTRAGAL STILE

Sealed: 6/18/2026

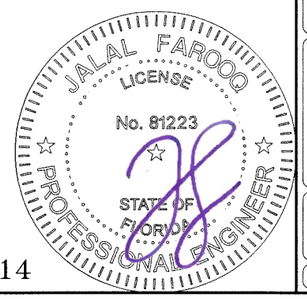

FL #27914

AL-FAROOQ CORPORATION
ENGINEERS & PRODUCT DEVELOPMENT
9360 SUNSET DRIVE, SUITE 220
MIAMI, FLORIDA 33173 (C.A.N. 3538)
TEL. (305) 264-8100 FAX. (305) 262-6978

COMP–ANL\21–21F–TG

SERIES–2400ST ALUM SLD. GLASS DOOR (L.M.I.)

TECNOGLASS, LLC
3550 N.W. 49 STREET
MIAMI, FL. 33142
TEL. (305) 638–5151 FAX. (305) 638–5158

revisions:

no	date	by	description

date: 03–16–21
scale: 1/2" = 1"
dr. by: TARIQ
chk. by:

drawing no. 21–21F

sheet 15 of 17

ITEM NO.	PART NUMBER	QUANTITY	DESCRIPTION	MATERIAL	MANF./SUPPLIER/REMARKS
1	2400ST–038	1	FRAME HEAD	6063–T6/6005–T5	–
1A	2400ST–018	1	ALT. FRAME HEAD	6063–T6	–
2	2400ST–039	1	FRAME SILL	6005–T5	–
2A	2400ST–010	1	ALT. FRAME SILL	6005–T5	–
2B	2400ST–088	1	ALT. FRAME SILL	6005–T5	–
3	2400ST–042	2	FRAME JAMB	6063–T6	–
3A	2400ST–001	2	ALT. FRAME JAMB	6063–T6	–
4	2400ST–008	1/MOV. PANEL	STD. MOVING BOTTOM RAIL	6063–T6	–
4A	2400ST–090	1/MOV. PANEL	HI–RISE MOVING BOTTOM RAIL	6063–T6	–
4B	2400ST–069	1/MOV. PANEL	ALTERNATE STD. MOVING BOTTOM RAIL	6063–T6	–
5	2400ST–009	1/FIX. PANEL	STD. FIXED BOTTOM RAIL	6063–T6	–
5A	2400ST–085	1/FIX. PANEL	HI–RISE FIXED BOTTOM RAIL	6063–T6	–
6	2400ST–006	1/MOV. PANEL	TOP MOVING RAIL	6063–T6	–
7	2400ST–007	1/FIX. PANEL	TOP FIXED RAIL	6063–T6	–
8	2400ST–004	1/FIX. PANEL	JAMB FIXED STILE	6063–T6	–
9	2400ST–002	1	JAMB FIX. STILE/LOCK STILE	6063–T6	–
9A	2400ST–092	1	ALT. LOCK STILE	6063–T6	–
10	2400ST–037	1/ PANEL	INTERLOCK	6005–T5	–
11	2400ST–005	1	ASTRAGAL STILE	6005–T5	–
11A	2400ST–091	1	REVERSE ASTRAGAL STILE	6005–T5	–
12	2400ST–012	1	THRESHOLD FILLING TRACK (LENGTH = OPNG. WIDTH BETWEEN FIXED PANELS)	6063–T6	–
13	2400ST–011	–	SILL TRACK ANCHOR	6005–T5	–
13A	–	4/ CLIP	1/4–20 X 3/4" LG. SOCKET HEAD CAP SCREWS	ST/ST	–
14	2400ST–019	1	HEAD ADAPTER (LENGTH = OPNG. WIDTH BETWEEN FIXED PANELS)	6063–T6	–
15	2400ST–031	2	SILL TRACK PLATE (5–1/4" X 1/4" X 4" LONG)	ALUMINUM	AT EACH END
15A	2400ST–031	3	SILL TRACK PLATE (5–1/4" X 1/4" X 9" LONG)	ALUMINUM	AT INTERLOCK/ASTRAGAL STILES
16	2400ST–032	–	MTG. RAIL THRESHOLD SEAL	6063–T5	6" LONG
17	#10 X 1/2"	2	WEATHERSTRIP FASTENERS	–	–
18	EMP DM–12–G01	–	BULB W'STRIPPING	VINYL	–
19	WV–2310	–	FLAP WEATHER SEAL	VINYL	WIBORG
20	V–026	–	BULB W'STRIPPING	VINYL	FP–198 PROTOTYPE
21	W31265NK	–	FIN PILE W'STRIPPING	–	ULTRAFAB
22	Q250X270	–	Q–LON W'STRIPPING	–	SCHLEGEL
24	V–017 S	AS REQD.	GLAZING GASKET (9/16" IMPACT GLASS), DUROMETER 75±5 SHORE A	VINYL	–
26	PR03–6005	2/MOV. PANEL	TANDEM PLASTIC WHEELS IN METALLIC HOUSING	–	DUAL ROLLERS
26A	PR03–6000	2/MOV. PANEL	TANDEM WHEEL ASSEMBLY	ST. STEEL	INTERLOCK
27	–	1	STANDARD MORTISE LOCK	ST. STEEL	INTERLOCK
28	–	1/LOCK	LOCK KEEPER, AT 41–1/2" FROM BOTTOM	PLATED STEEL	INTERLOCK
29	–	–	DOOR BUMPER	–	1" DIA. X 3/4" LONG
30	2400ST–040	AS REQD.	INSIDE SCREEN TRACK	6063–T6	–
31	#10 X 1–1/2"	2/ PANEL	PANEL ASSBY. SCREWS	ST/ST	–
32	#10 X 1"	2/ CORNER	FRAME ASSBY. SCREWS	–	–
33	–	2	4–1/4" X .060" X 6" LONG PLATE	ALUMINUM	AT FRAME JAMB BOTTOM
34	–	–	5/8" X 1–1/2" X .1" PLATE @ LOCK STILE BOTTOM	ALUMINUM	FASTENED W/ #8 X 3/8" FH SMS
35	2400ST–071	1	FREE STANDING JAMB (FIX. SIDE)	6005–T5	–
36	2400ST–072	1	FREE STANDING JAMB (OPERABLE SIDE)	6005–T5	–

LOCK:

SURFACE MOUNT METALLIC HANDLE AT 41–1/2" FROM BOTTOM
FASTENED TO LOCK STILE WITH
(2) #8 X 1/2" FH SMS

SURFACE MOUNT METALLIC 3 PLY DUAL HOOK LOCK
41–1/2" FROM BOTTOM
FASTENED TO LOCK STILE WITH
(2) #10 X 1" FH SMS

SURFACE MOUNT METALLIC KEEPER AT 41–1/2" FROM BOTTOM
FASTENED TO FRAME JAMB AND ASTRAGAL STILE WITH
(3) #8 X 3/4" PH SMS

SEALANTS:

ALL FRAME AND PANEL JOINT, INSTALLATION SCREWS AND HEADS OF ANCHOR SCREWS AT SILL TO BE SEALED WITH WHITE/ALUM COLORED SEALANT.

Sealed: 6/18/2026

JALAL FAROOQ LICENSE No. 81223 STATE OF FLORIDA PROFESSIONAL ENGINEER

FL #27914

AL-FAROOQ CORPORATION
ENGINEERS & PRODUCT DEVELOPMENT
9360 SUNSET DRIVE, SUITE 220
MIAMI, FLORIDA 33173 (C.A.N. 3538)
TEL. (305) 264-8100 FAX. (305) 262-6978

COMP–ANL\21–21F–TG

SERIES–2400ST ALUM SLD. GLASS DOOR (L.M.I.)

TECNOGLASS, LLC
3550 N.W. 49 STREET
MIAMI, FL. 33142
TEL. (305) 638–5151 FAX. (305) 638–5158

revisions:			
no	date	by	description

date: 03–16–21
scale: 1/2" = 1"
dr. by: TARIQ
chk. by:

drawing no. 21–21F

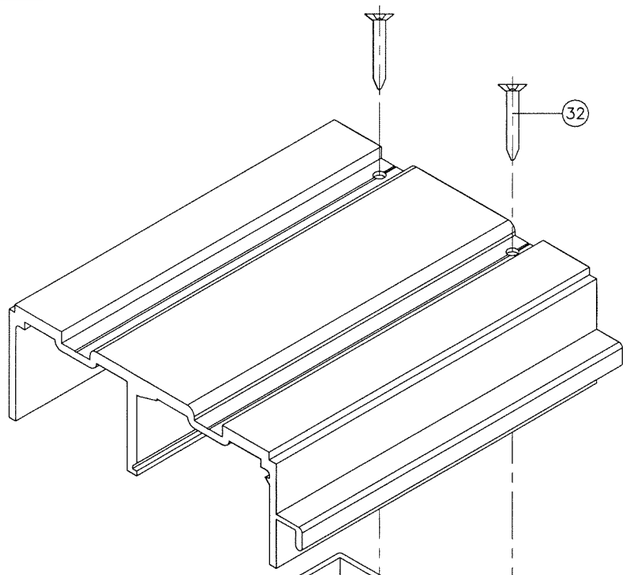

FRAME TOP CORNER

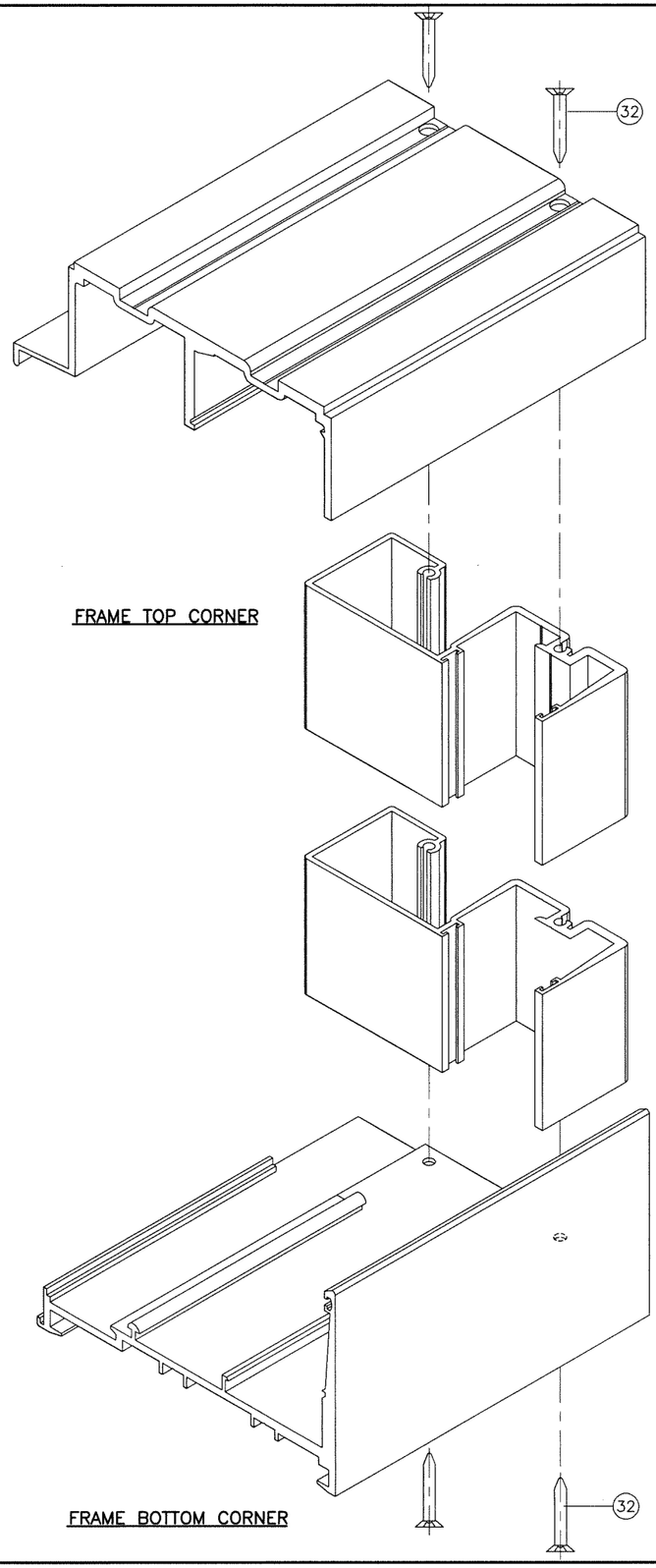

FRAME TOP CORNER

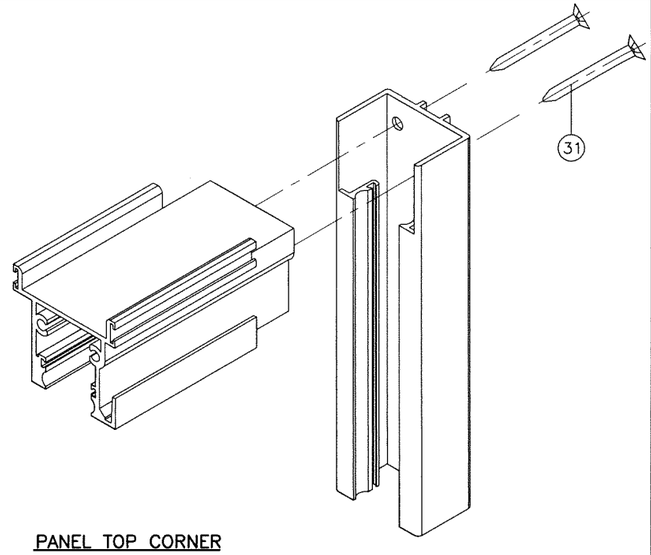

PANEL TOP CORNER

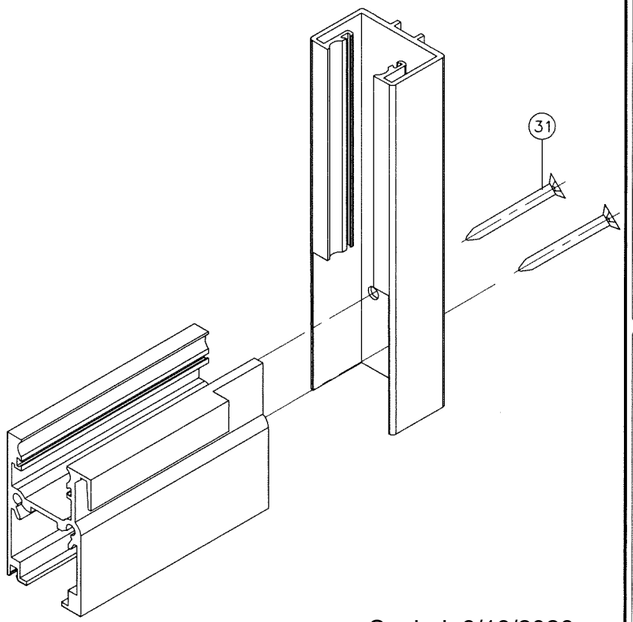

PANEL BOTTOM CORNER

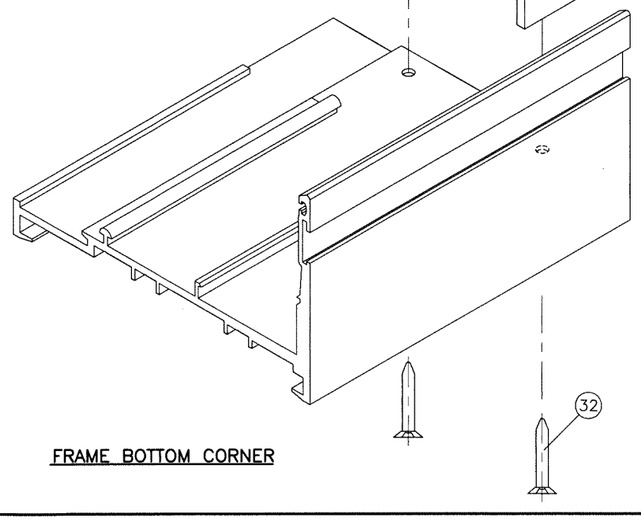

FRAME BOTTOM CORNER

FRAME BOTTOM CORNER

Sealed: 6/18/2026

JALAL FAROOQ LICENSE No. 81223 STATE OF FLORIDA PROFESSIONAL ENGINEER

FL #27914

AL-FAROOQ CORPORATION
ENGINEERS & PRODUCT DEVELOPMENT
9360 SUNSET DRIVE, SUITE 220
MIAMI, FLORIDA 33173 (C.A.N. 3538)
TEL. (305) 264-8100 FAX. (305) 262-6978

COMP-ANL\21-21F-TG

SERIES-2400ST ALUM SLD. GLASS DOOR (L.M.I.)

TECNOGLASS, LLC
3550 N.W. 49 STREET
MIAMI, FL. 33142
TEL. (305) 638-5151 FAX. (305) 638-5158

revisions:

no	date	by	description

date: 03-16-21
scale: 1/2" = 1"
dr. by: TARIQ
chk. by:

drawing no. 21-21F

sheet 17 of 17