THIS SYSTEM IS RATED FOR SMALL MISSILE IMPACT.
F.B.C. APPROVED IMPACT RESISTANT SHUTTERS
REQUIRED FOR INSTALLATIONS UP TO 30 FT. OF GRADE.
SHUTTERS NOT REQD. FOR INSTALLATIONS ABOVE 30 FT. OF GRADE.

SERIES-5250
ALUMINUM CURTAIN WALL SYSTEM (S.M.I.)

THIS PRODUCT HAS BEEN DESIGNED AND TESTED TO COMPLY WITH THE REQUIREMENTS OF THE 2020 (7TH EDITION)/2023 (8TH EDITION) FLORIDA BUILDING CODE INCLUDING HIGH VELOCITY HURRICANE ZONE (HVHZ).

ANCHORS SHALL BE CORROSION RESISTANT, SPACED AS SHOWN ON DETAILS AND INSTALLED PER MANUF'S INSTRUCTIONS. SPECIFIED EMBEDMENT TO BASE MATERIAL SHALL BE BEYOND WALL DRESSING OR STUCCO.

ALL SHIMS TO BE HIGH IMPACT, NON-METALLIC AND NON-COMPRESSIBLE.

MATERIALS INCLUDING BUT NOT LIMITED TO STEEL/METAL SCREWS, THAT COME INTO CONTACT WITH OTHER DISSIMILAR MATERIALS SHALL MEET THE REQUIREMENTS OF THE 2020/2023 FLORIDA BLDG. CODE & ADOPTED STANDARDS.

THIS PRODUCT APPROVAL IS GENERIC AND DOES NOT PROVIDE INFORMATION FOR A SITE SPECIFIC PROJECT, i.e. LIFE SAFETY OF THIS PRODUCT, ADEQUACY OF STRUCTURE RECEIVING THIS PRODUCT AND SEALING AROUND OPENING FOR WATER INFILTRATION RESISTANCE ETC.
CONDITIONS NOT SHOWN IN THIS DRAWING ARE TO BE ANALYZED SEPARATELY, AND TO BE REVIEWED BY BUILDING OFFICIAL.

DESIGN LOADS SHOWN ARE BASED ON 'ALLOWABLE STRESS DESIGN (ASD)'.

MANUFACTURER'S LABEL SHALL BE LOCATED ON A READILY VISIBLE LOCATION IN ACCORDANCE WITH SECTION 1709.9.3 OF FLORIDA BUILDING CODE. LABELING TO COMPLY WITH SECTION 1709.9.2.

CURTAIN WALL SYSTEM WITH GLASS TYPE 'B' & 'B1' COMPLIES WITH REQUIREMENTS OF ANSI Z97.1.

INDEX OF DRAWING	
SHEET NO.	DESCRIPTION
1	GENERAL NOTES
2	CURTAIN WALL ELEVATION (SINGLE SPAN W/O HEAD RECEPTOR)
3	CURTAIN WALL ELEVATION (SINGLE SPANS WITH HEAD RECEPTOR)
4	CURTAIN WALL ELEVATION (DOUBLE SPANS W/O HEAD RECEPTOR)
5 & 6	GLASS CAPACITY CHARTS, GLAZING DETAILS
7 & 8	SINGLE & DOUBLE SPANS MULLION CAPACITY CHART
9 THRU 10.1	HEAD/SILL ANCHOR CAPACITY CHARTS
11 & 12	VERTICAL SECTION DETAILS
13 THRU 15	HORIZONTAL SECTION DETAILS
16 & 17	DEAD LOAD ANCHOR DETAILS
18 & 19	DEAD LOAD CORNER MULLION ANCHOR DETAILS
20 & 21	EXTRUSION DETAILS
22	BILL OF MATERIALS
23	CORNER CONSTRUCTION DETAILS

INSTRUCTIONS:

USE CHARTS AS FOLLOWS.

STEP 1 DETERMINE DESIGN WIND LOAD REQUIREMENT BASED ON WIND VELOCITY, BLDG. HEIGHT, WIND ZONE USING APPLICABLE ASCE 7 STANDARD.

STEP 2 SEE CHARTS ON SHEET 5 FOR DESIGN LOAD CAPACITY OF DESIRED GLASS SIZE.
FOR STRUCTURAL GLAZING (SSG SYSTEM) ONLY CHECK SILICONE CAPACITY USING CHART ON SHEET 6.

STEP 3 CHECK MULLION CAPACITY FOR A GIVEN SPACING AND HEIGHT USING CHARTS ON SHEET 8.

STEP 4 USING HEAD/SILL ANCHOR DETAILS ON SHEETS 9 THRU 10.1 SELECT ANCHOR OPTION WITH DESIGN RATING MORE THAN DESIGN LOAD SPECIFIED IN STEP 1 ABOVE.

STEP 5 CHECK INTERMEDIATE ANCHOR CAPACITY FOR DOUBLE SPANS USING CHARTS OR DETAILS ON SHEETS 16 THRU 19.

STEP 6 THE LOWEST VALUE RESULTING FROM STEPS 2, 3, 4 AND 5 SHALL APPLY TO ENTIRE SYSTEM.

A- CONTRACTOR TO BE RESPONSIBLE FOR THE SELECTION, PURCHASE AND INSTALLATION OF THIS PRODUCT BASED ON THIS PRODUCT EVALUATION PROVIDED HE/SHE DOES NOT DEVIATE FROM THE CONDITIONS DETAILED ON THIS DOCUMENT.

B- THIS PRODUCT EVALUATION DOCUMENT WILL BE CONSIDERED INVALID IF ALTERED BY ANY MEANS.

C- SITE SPECIFIC PROJECTS SHALL BE PREPARED BY A FLORIDA REGISTERED ENGINEER OR ARCHITECT WHICH WILL BECOME THE ENGINEER OF RECORD (E.O.R.) FOR THE PROJECT AND WHO WILL BE RESPONSIBLE FOR THE PROPER USE OF THE P.E.D. ENGINEER OF RECORD, ACTING AS A DELEGATED ENGINEER TO THE P.E.D. ENGINEER SHALL SUBMIT TO THIS LATTER THE SITE SPECIFIC DRAWINGS FOR REVIEW.

D- THIS P.E.D. SHALL BEAR THE DATE AND ORIGINAL SEAL AND SIGNATURE OF THE PROFESSIONAL ENGINEER OF RECORD THAT PREPARED IT.

LAMINATED GLASS
INSUL. LAM. GLASS
SMALL MISSILE IMPACT

Sealed: 10/23/2023

FL #27598

JALAL FAROOQ
LICENSE
No. 81223
STATE OF FLORIDA
PROFESSIONAL ENGINEER

AL-FAROOQ CORPORATION
ENGINEERS & PRODUCT DEVELOPMENT
9360 SUNSET DRIVE, SUITE 220
MIAMI, FLORIDA 33173 (C.A.N. 3538)
TEL. (305) 264-8100 FAX. (305) 262-6978

COMP-ANL\18-32F-TG

SERIES-5250 ALUMINUM CURTAIN WALL SYSTEM (S.M.I.)

TECNOGLASS, LLC
3550 N.W. 49 STREET
MIAMI, FL. 33142
TEL. (305) 638-5151 FAX. (305) 638-5158

revisions:			
no	date	by	description
A	05.25.18	RER	REV. PER COMMENTS
B	02.15.19		GENERAL REVISION
C	12.28.20		UPDATED TO 2020 FBC
D	10.02.23		UPDATED TO 2023 FBC

date: 06-27-18
scale: -
dr. by: TARIQ
chk. by:

drawing no. 18-32F

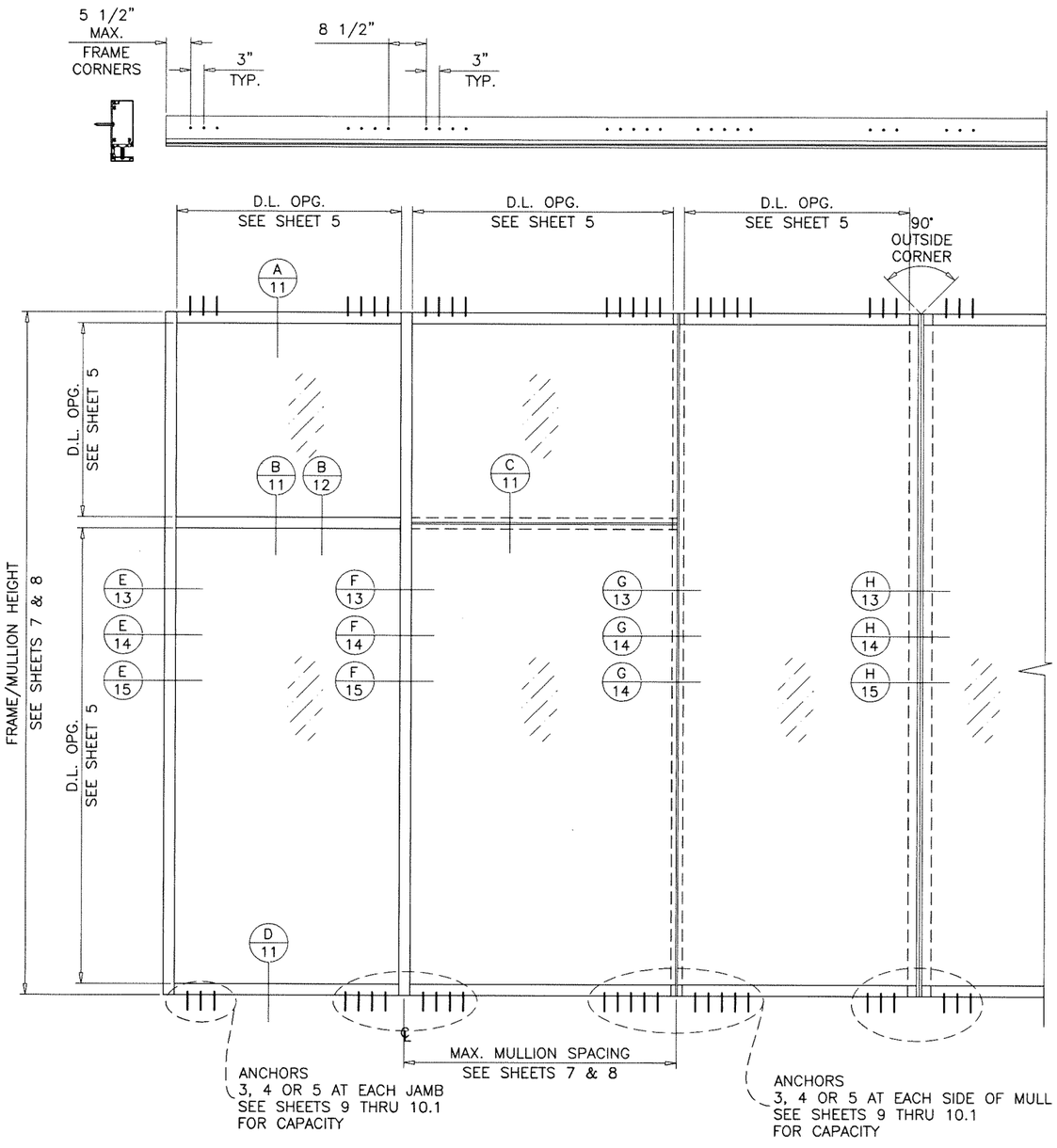

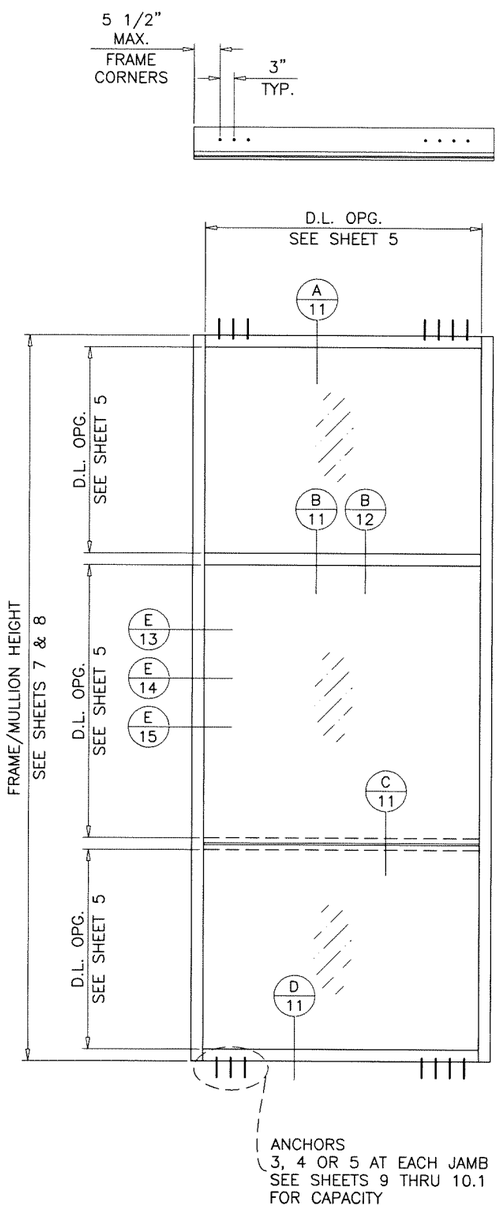

TYPICAL ELEVATIONS

SINGLE SPAN WITHOUT HEAD RECEPTOR W/ 90° EXTERIOR CORNER

Sealed: 10/23/2023

JALAL FAROOQ LICENSE No. 81223 STATE OF FLORIDA PROFESSIONAL ENGINEER

FL #27598

AL-FAROOQ CORPORATION
ENGINEERS & PRODUCT DEVELOPMENT
9360 SUNSET DRIVE, SUITE 220
MIAMI, FLORIDA 33173 (C.A.N. 3538)
TEL. (305) 264-8100 FAX. (305) 262-6978

COMP-ANL\18-32F-TG

SERIES-5250 ALUMINUM CURTAIN WALL SYSTEM (S.M.I.)

TECNOGLASS, LLC
3550 N.W. 49 STREET
MIAMI, FL. 33142
TEL. (305) 638-5151 FAX. (305) 638-5158

revisions:			
no	date	by	description

date: 06-27-18
scale: 3/8"=1'-0"
dr. by: TARIQ
chk. by:

drawing no. 18-32F

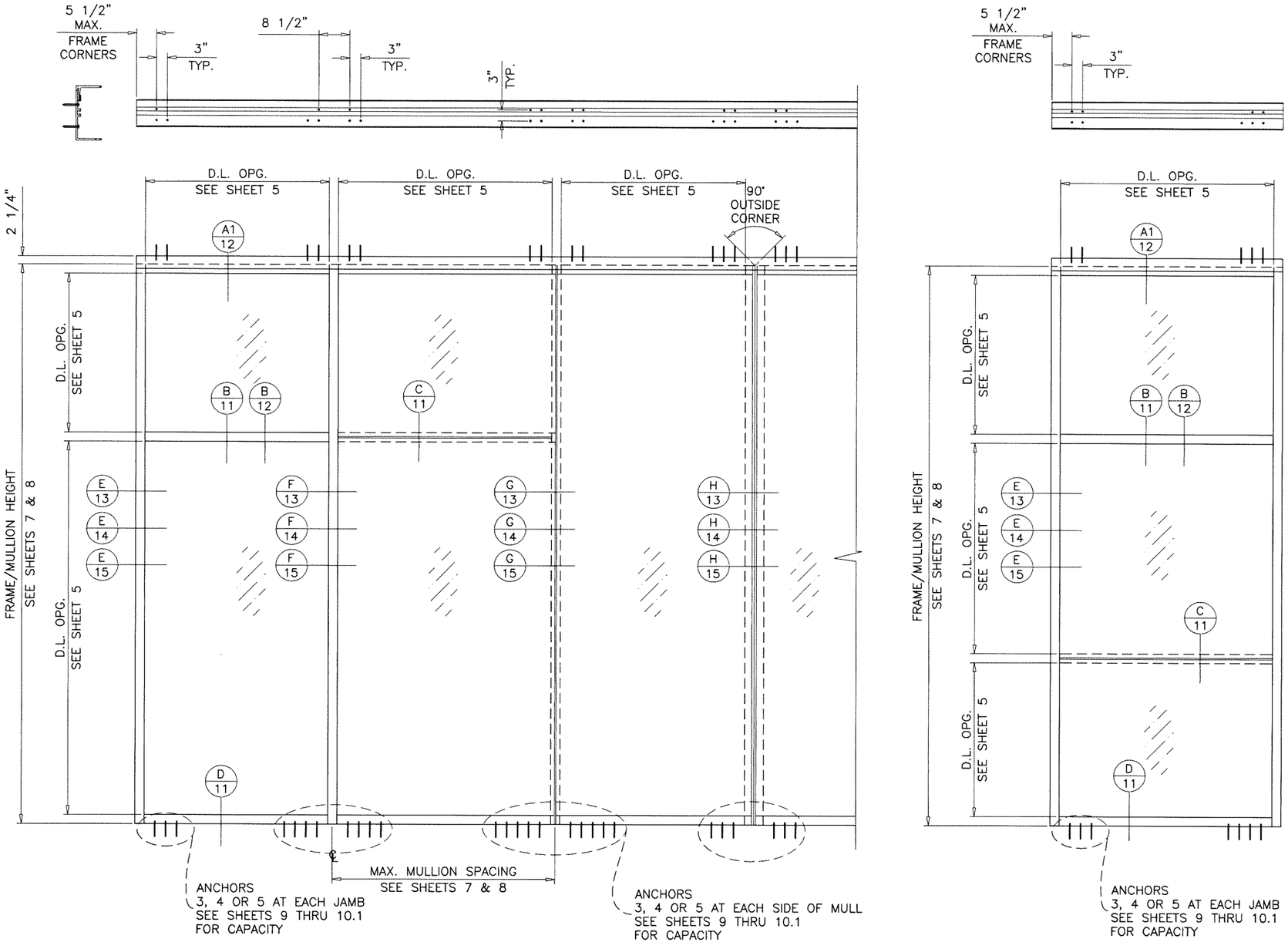

TYPICAL ELEVATIONS

SINGLE SPAN WITH HEAD RECEPTOR W/ 90° EXTERIOR CORNER

Sealed: 10/23/2023

JALAL FAROOQ LICENSE No. 81223 STATE OF FLORIDA PROFESSIONAL ENGINEER

FL #27598

AL-FAROOQ CORPORATION
ENGINEERS & PRODUCT DEVELOPMENT
9360 SUNSET DRIVE, SUITE 220
MIAMI, FLORIDA 33173 (C.A.N. 3538)
TEL. (305) 264-8100 FAX. (305) 262-6978

COMP-ANL\18-32F-TG

SERIES-5250 ALUMINUM CURTAIN WALL SYSTEM (S.M.I.)

TECNOGLASS, LLC
3550 N.W. 49 STREET
MIAMI, FL. 33142
TEL. (305) 638-5151 FAX. (305) 638-5158

revisions:

no	date	by	description

date: 06-27-18
scale: 3/8"=1'-0"
dr. by: TARIQ
chk. by:

drawing no. 18-32F

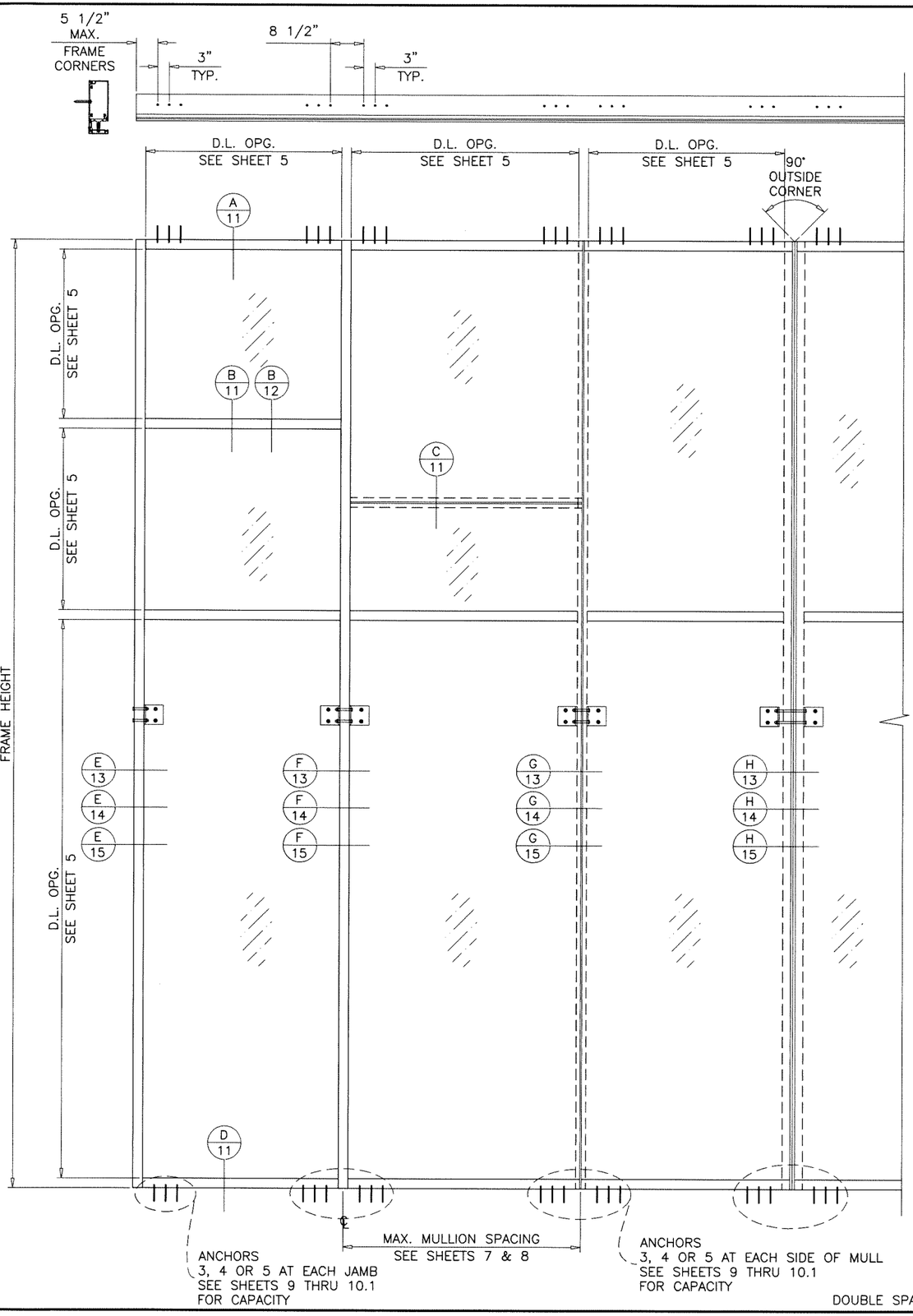

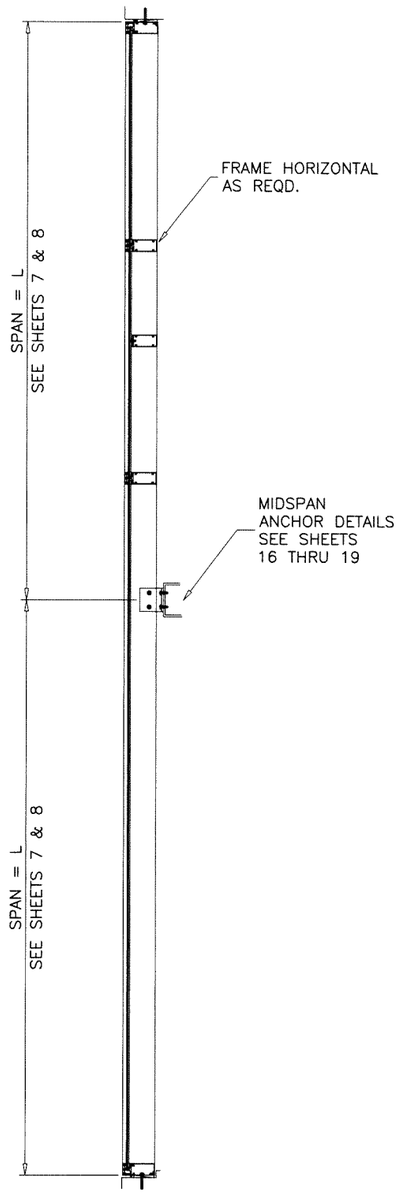

TYPICAL ELEVATION

DOUBLE SPAN WITHOUT HEAD RECEPTOR W/ 90° EXTERIOR CORNER

Sealed: 10/23/2023

FL #27598

JALAL FAROOQ LICENSE No. 81223 STATE OF FLORIDA PROFESSIONAL ENGINEER

AL-FAROOQ CORPORATION
ENGINEERS & PRODUCT DEVELOPMENT
9360 SUNSET DRIVE, SUITE 220
MIAMI, FLORIDA 33173 (C.A.N. 3538)
TEL. (305) 264-8100 FAX. (305) 262-6978

COMP-ANL\18-32F-TG

SERIES-5250 ALUMINUM CURTAIN WALL SYSTEM (S.M.I.)

TECNOGLASS, LLC
3550 N.W. 49 STREET
MIAMI, FL. 33142
TEL. (305) 638-5151 FAX. (305) 638-5158

revisions:

no	date	by	description

date: 06-27-18
scale: 3/8"=1'-0"
dr. by: TARIQ
chk. by:

drawing no. 18-32F

sheet 4 of 23

GLASS LOAD CAPACITY – PSF		
NOMINAL DIMS.		GLASS TYPES 'A', 'A1', 'B', 'B1'
D.L.O. WIDTH	D.L.O. HEIGHT	EXT. (+) INT. (–)
27–1/2"	79"	130.0
33–1/2"		130.0
39–1/2"		130.0
45–1/2"		130.0
51–1/2"		115.6
55–1/2"		107.6
57–1/2"		104.0
63–1/2"		94.5
69–1/2"		86.7
75–1/2"		80.0
27–1/2"	85"	130.0
33–1/2"		130.0
39–1/2"		130.0
45–1/2"		130.0
51–1/2"		115.6
55–1/2"		107.6
57–1/2"		104.0
63–1/2"		94.5
69–1/2"		86.7
27–1/2"	91"	130.0
33–1/2"		130.0
39–1/2"		130.0
45–1/2"		130.0
51–1/2"		115.6
55–1/2"		107.6
57–1/2"		104.0
63–1/2"		94.5
69–1/2"		86.7
27–1/2"	97"	130.0
33–1/2"		130.0
39–1/2"		130.0
45–1/2"		130.0
51–1/2"		115.6
55–1/2"		107.6
57–1/2"		104.0
63–1/2"		94.5
27–1/2"	103"	130.0
33–1/2"		130.0
39–1/2"		130.0
45–1/2"		130.0
51–1/2"		115.6
55–1/2"		107.6
57–1/2"		104.0
27–1/2"	109"	130.0
33–1/2"		130.0
39–1/2"		130.0
45–1/2"		130.0
51–1/2"		115.6
55–1/2"		107.6
57–1/2"		104.0

GLASS LOAD CAPACITY – PSF		
NOMINAL DIMS.		GLASS TYPES 'A', 'A1', 'B', 'B1'
D.L.O. WIDTH	D.L.O. HEIGHT	EXT. (+) INT. (–)
27–1/2"	115"	130.0
33–1/2"		130.0
39–1/2"		130.0
45–1/2"		130.0
51–1/2"		115.6
27–1/2"	121"	130.0
33–1/2"		130.0
39–1/2"		130.0
45–1/2"		130.0
51–1/2"		115.6
27–1/2"	127"	130.0
33–1/2"		130.0
39–1/2"		130.0
45–1/2"		130.0
27–1/2"	133"	130.0
33–1/2"		130.0
39–1/2"		130.0
45–1/2"		130.0
27–1/2"	139"	130.0
33–1/2"		130.0
39–1/2"		130.0
45–1/2"		130.0

INTERPOLATION BETWEEN WIDTHS OR HEIGHTS ALLOWED.

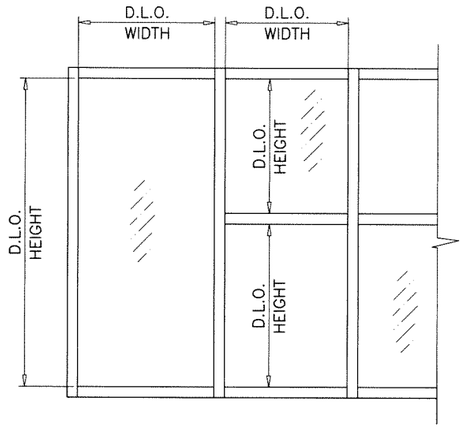

SINGLE 'O' PANEL:
FRAME WIDTH = D.L.O. WIDTH + 5.00"
FRAME HEIGHT = D.L.O. HEIGHT + 5.00"

NOTE:
GLASS CAPACITIES ON THIS SHEET ARE BASED ON ASTM E1300–09 (3 SEC. GUSTS)

Sealed: 10/23/2023

JALAL FAROOQ LICENSE No. 81223 STATE OF FLORIDA PROFESSIONAL ENGINEER

FL #27598

AL-FAROOQ CORPORATION
ENGINEERS & PRODUCT DEVELOPMENT
9360 SUNSET DRIVE, SUITE 220
MIAMI, FLORIDA 33173 (C.A.N. 3538)
TEL. (305) 264-8100 FAX. (305) 262-6978

COMP–ANL\18–32F–TG

SERIES–5250 ALUMINUM CURTAIN WALL SYSTEM (S.M.I.)

TECNOGLASS, LLC
3550 N.W. 49 STREET
MIAMI, FL. 33142
TEL. (305) 638–5151 FAX. (305) 638–5158

revisions:

no	date	by	description

date: 06–27–18
scale: 3/8" = 1"
dr. by: TARIQ
chk. by:

drawing no. 18–32F

sheet 5 of 23

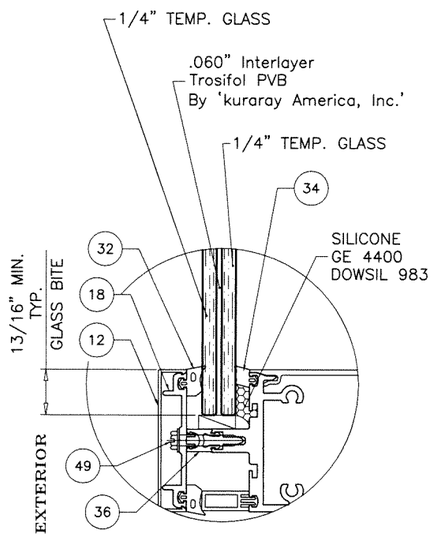

GLASS TYPE 'A'
9/16" LAM. GLASS

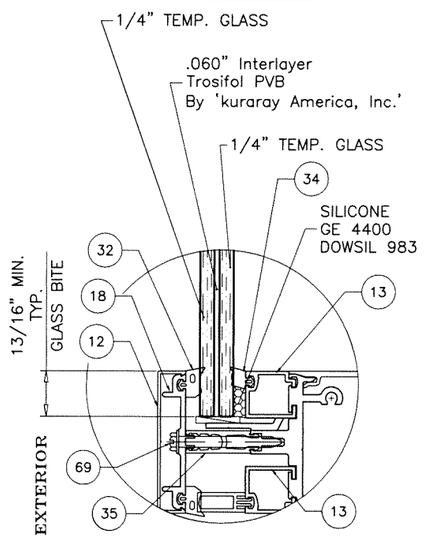

GLASS TYPE 'A'
9/16" LAM. GLASS

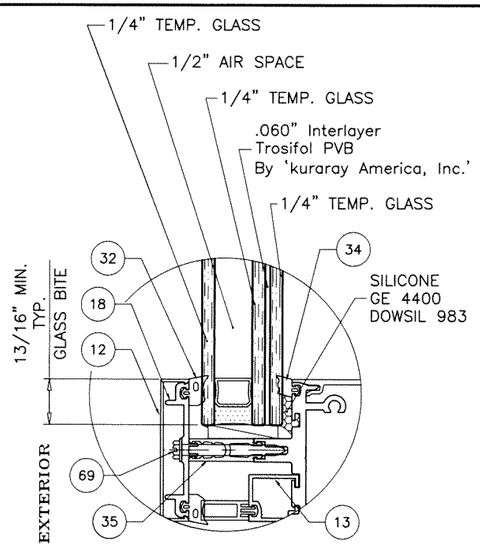

GLASS TYPE 'A1'
1-5/16" INSUL. LAM. GLASS

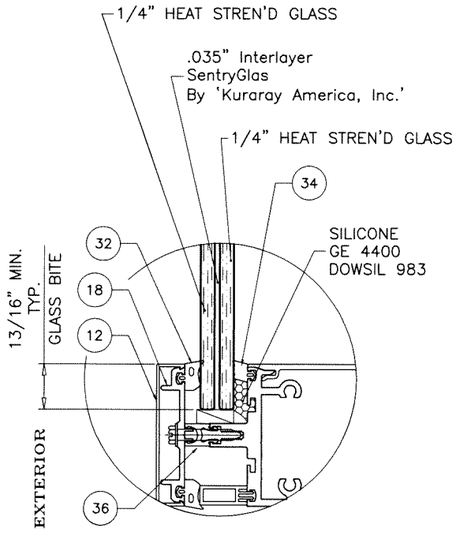

GLASS TYPE 'B'
9/16" LAM. GLASS

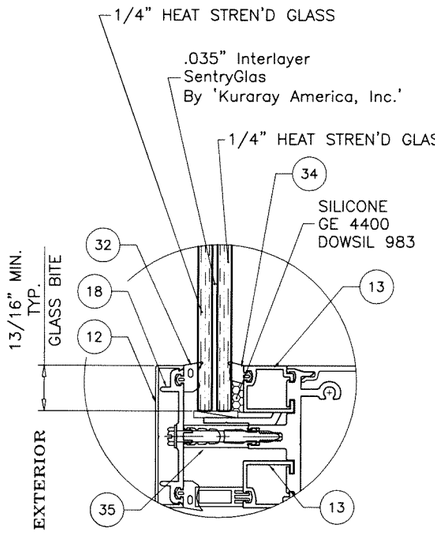

GLASS TYPE 'B'
9/16" LAM. GLASS

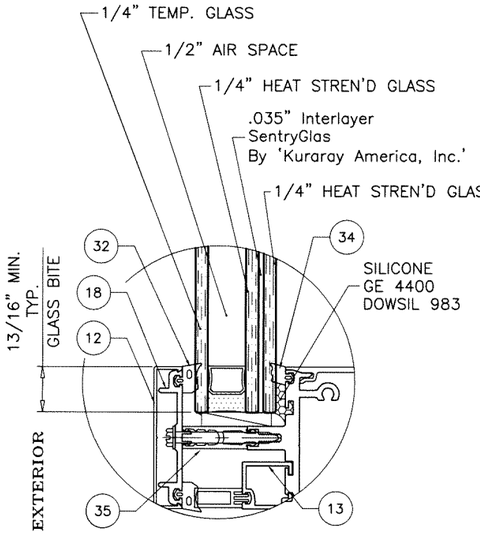

GLASS TYPE 'B1'
1-5/16" INSUL. LAM. GLASS

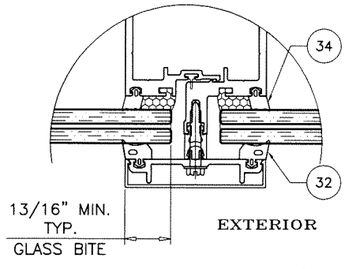

GLASS TYPE 'A' & 'B'
AT CAPTURED JAMB/MULLION

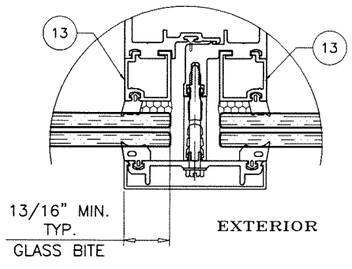

GLASS TYPE 'A' & 'B'
AT CAPTURED JAMB/MULLION

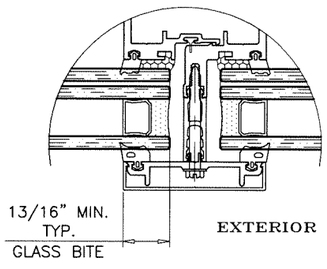

GLASS TYPE 'A1' & 'B1'
AT CAPTURED JAMB/MULLION

1/2" AIR SPACE CONSISTING OF:
SPACER:
'HELIMA' LOW PROFILE ALUMINUM SPACER
BY 'LINGERMANN GMBH'
AROUND THE PERIMETER OF THE GLASS.
PERIMETER SEALANT:
SILICONE
DOWSIL 791
GE 2000

GLAZING DETAILS W/ PRESSURE PLATE CAPTURED SYSTEM

Sealed: 10/23/2023

FL #27598

AL-FAROOQ CORPORATION
ENGINEERS & PRODUCT DEVELOPMENT
9360 SUNSET DRIVE, SUITE 220
MIAMI, FLORIDA 33173 (C.A.N. 3538)
TEL. (305) 264-8100 FAX. (305) 262-6978

COMP-ANL\18-32F-TG

SERIES-5250 ALUMINUM CURTAIN WALL SYSTEM (S.M.I.)

TECNOGLASS, LLC
3550 N.W. 49 STREET
MIAMI, FL. 33142
TEL. (305) 638-5151
FAX. (305) 638-5158

revisions:

no	date	by	description

date: 06-27-18
scale: 3/8" = 1"
dr. by: TARIQ
chk. by:

drawing no. 18-32F

sheet 5.1 of 23

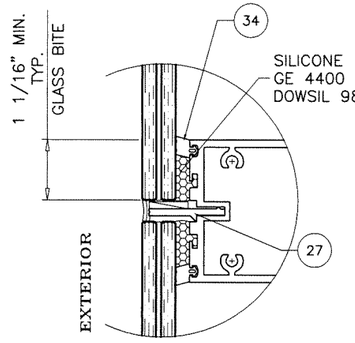

GLASS TYPE 'A' & 'B'
AT SSG HORIZONTAL

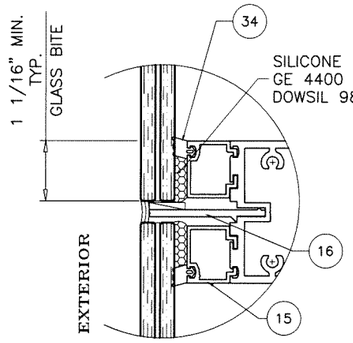

GLASS TYPE 'A' & 'B'
AT SSG HORIZONTAL

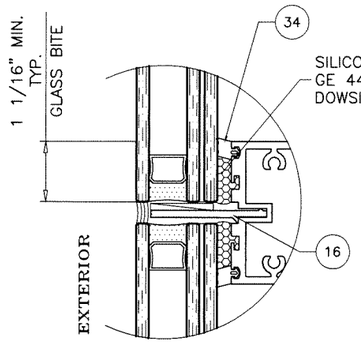

GLASS TYPE 'A1' & 'B1'
AT SSG HORIZONTAL

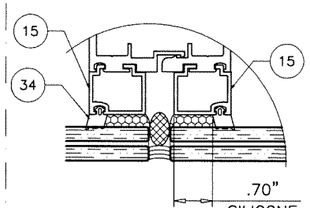

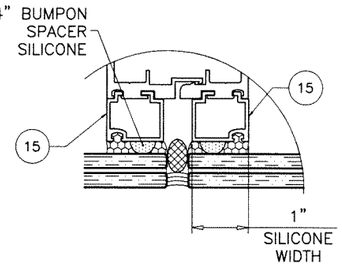

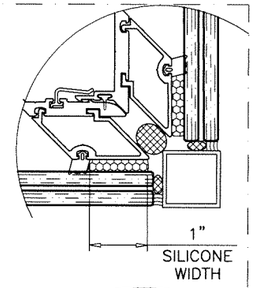

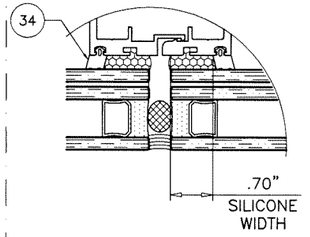

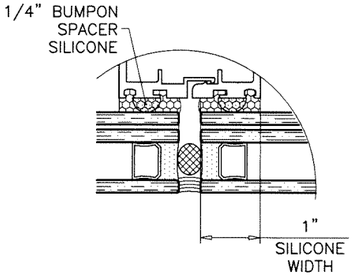

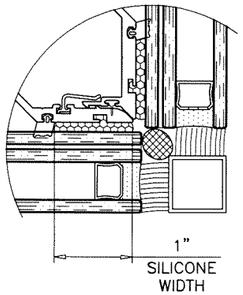

STRUCTURAL SILICONE (SSG) CAPACITY-PSF AT VERTICALS		
	SILICONE WIDTH	
D.L.O. WIDTH	.7 IN.	1 IN.
27-1/2"	130.0	130.0
33-1/2"	120.4	130.0
39-1/2"	102.1	130.0
45-1/2"	88.6	126.6
51-1/2"	78.3	111.8
55-1/2"	72.6	103.8
57-1/2"	70.1	100.2
63-1/2"	63.5	90.7
69-1/2"	58.0	82.9
75-1/2"	53.4	76.3

DESIGN LOADS FOR SILICONE WIDTHS AT SSG MULLIONS ONLY. LOWER DESIGN LOADS FROM SHEET 5 OR CHART ABOVE SHALL CONTROL.

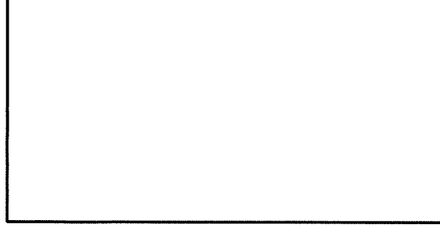

GLASS TYPE 'A' & 'B'
AT SSG MULLION

GLASS TYPE 'A' & 'B'
AT SSG MULLION

GLASS TYPE 'A1' & 'B1'
AT SSG MULLION

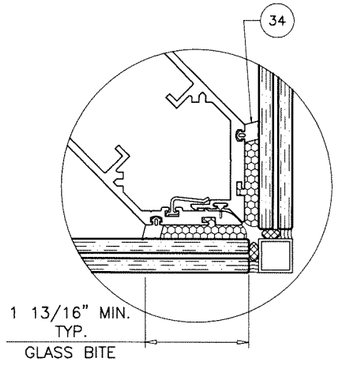

GLASS TYPE 'A' & 'B'
AT SSG CORNER MULLION

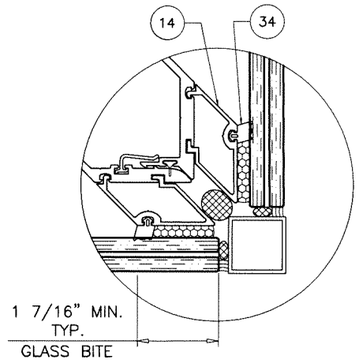

GLASS TYPE 'A' & 'B'
AT SSG CORNER MULLION

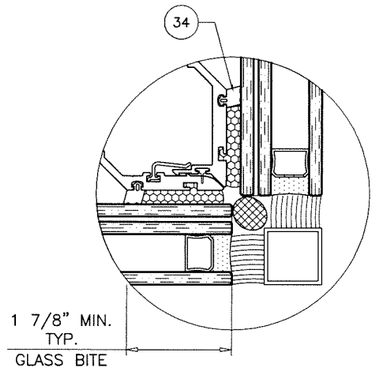

GLASS TYPE 'A1' & 'B1'
AT SSG CORNER MULLION

Sealed: 10/23/2023

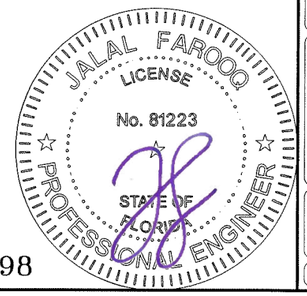

FL #27598

AL-FAROOQ CORPORATION
ENGINEERS & PRODUCT DEVELOPMENT
9360 SUNSET DRIVE, SUITE 220
MIAMI, FLORIDA 33173 (C.A.N. 3538)
TEL. (305) 264-8100 FAX. (305) 262-6978

COMP-ANL\18-32F-TG

SERIES-5250 ALUMINUM CURTAIN WALL SYSTEM (S.M.I.)

TECNOGLASS, LLC
3550 N.W. 49 STREET
MIAMI, FL. 33142
TEL. (305) 638-5151 FAX. (305) 638-5158

revisions:

no	date	by	description

date: 06-27-18
scale: 3/8" = 1"
dr. by: TARIQ
chk. by:

drawing no. 18-32F

sheet 6 of 23

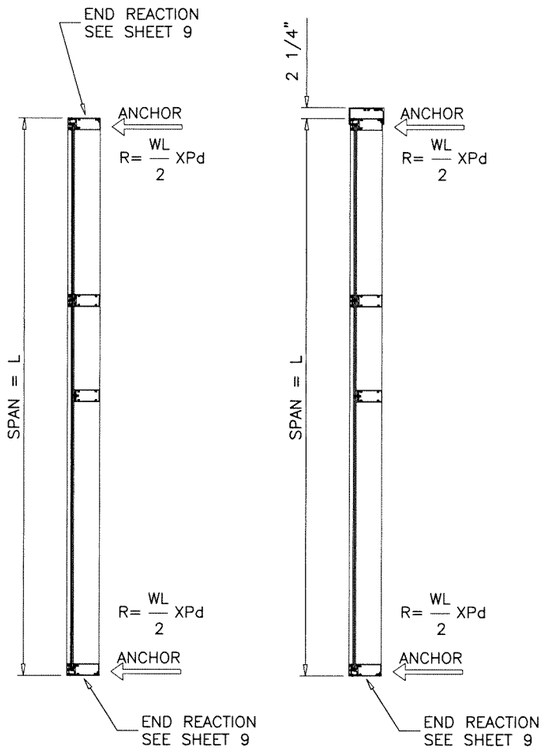

SINGLE SPAN
WITHOUT RECEPTOR

SINGLE SPAN
WITH RECEPTOR

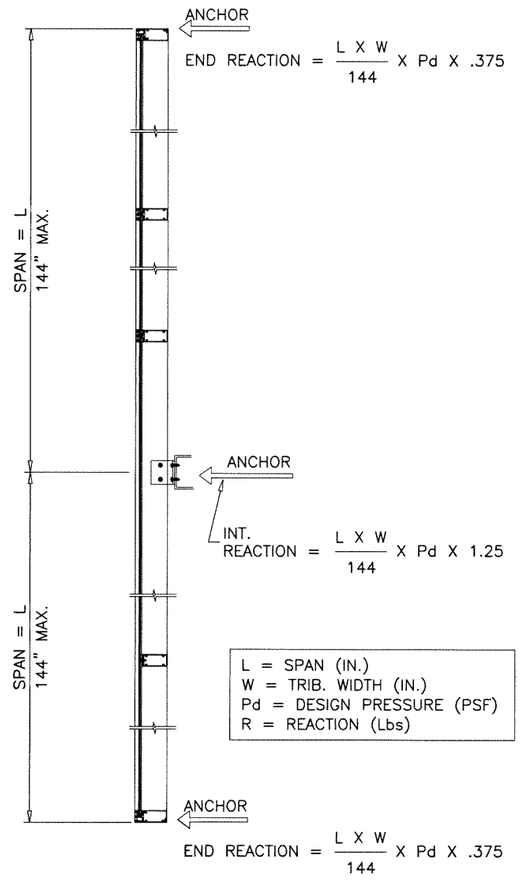

DOUBLE SPANS
WITHOUT RECEPTOR

SEE CHART ON SHEET 8 FOR MULLION DESIGN LOAD CAPACITY.

JAMB TYPES 'J1', 'J2', 'J3' AND MULLION TYPES 'M1', 'M2' & 'M3' APPROVED FOR SINGLE SPANS INSTALLATIONS ONLY.

JAMB TYPE 'J4' AND MULLION TYPES 'M4' & 'MC' APPROVED FOR SINGLE SPANS AND DOUBLE SPANS INSTALLATIONS.

INTERMEDIATE HORIZONTAL IS AN INTEGRAL PART OF SINGLE OR DOUBLE SPANS.

UNEQUAL SPANS TO BE CHECKED ON JOB TO JOB BASIS
UNDER SEPARATE APPROVAL TO BE REVIEWED BY BUILDING OFFICIAL

Sealed: 10/23/2023

JALAL FAROOQ LICENSE No. 81223 STATE OF FLORIDA PROFESSIONAL ENGINEER

FL #27598

AL-FAROOQ CORPORATION
ENGINEERS & PRODUCT DEVELOPMENT
9360 SUNSET DRIVE, SUITE 220
MIAMI, FLORIDA 33173 (C.A.N. 3538)
TEL. (305) 264-8100 FAX. (305) 262-6978

afc

COMP-ANL\18-32F-TG

SERIES-5250 ALUMINUM CURTAIN WALL SYSTEM (S.M.I.)

TECNOGLASS, LLC
3550 N.W. 49 STREET
MIAMI, FL. 33142
TEL. (305) 638-5151
FAX. (305) 638-5158

revisions:

no	date	by	description

date: 06-27-18
scale: -
dr. by: TARIQ
chk. by:

drawing no.
18-32F

sheet 7 of 23

JAMB/MULLION LOAD CAPACITY – PSF
WITH OR WITHOUT INTERMEDIATE HORIZONTALS

NOMINAL DIMS.		JAMB 'J1' MULL 'M1'	JAMB 'J2' MULL 'M2'	JAMB 'J3' MULL 'M3'	JAMB 'J4' MULL 'M4'	JAMB 'J4' MULL 'MC'
WIDTH (W)	FRAME HEIGHT	EXT. (+) INT. (–)	EXT. (+) INT. (–)	EXT. (+) INT. (–)	EXT. (+) INT. (–)	EXT. (+) INT. (–)
30"	84"	130.0	130.0	130.0	130.0	130.0
36"		130.0	130.0	130.0	130.0	130.0
42"		130.0	130.0	130.0	130.0	130.0
48"		130.0	130.0	130.0	130.0	130.0
54"		130.0	129.6	130.0	130.0	130.0
58"		124.0	120.6	130.0	130.0	130.0
60"		119.9	116.6	130.0	130.0	130.0
66"		109.0	106.0	130.0	130.0	130.0
72"		99.9	97.2	130.0	130.0	130.0
78"		92.2	89.7	123.6	130.0	130.0
84"		85.6	83.3	114.8	130.0	130.0
30"	90"	130.0	130.0	130.0	130.0	130.0
36"		130.0	130.0	130.0	130.0	130.0
42"		130.0	130.0	130.0	130.0	130.0
48"		129.2	127.0	130.0	130.0	130.0
54"		114.8	112.9	130.0	130.0	130.0
58"		106.9	105.1	130.0	130.0	130.0
60"		103.4	101.6	130.0	130.0	130.0
66"		94.0	92.3	127.2	130.0	130.0
72"		86.1	84.6	116.6	130.0	130.0
78"		79.5	78.1	107.7	122.4	130.0
30"	96"	130.0	130.0	130.0	130.0	130.0
36"		130.0	130.0	130.0	130.0	130.0
42"		128.5	127.5	130.0	130.0	130.0
48"		112.4	111.6	130.0	130.0	130.0
54"		99.9	99.2	130.0	130.0	130.0
58"		93.0	92.4	127.3	130.0	130.0
60"		89.9	89.3	123.0	130.0	130.0
66"		–	81.2	111.8	127.2	130.0
72"		–	74.4	102.5	116.6	130.0
30"	102"	–	130.0	130.0	130.0	130.0
36"		–	130.0	130.0	130.0	130.0
42"		–	113.0	130.0	130.0	130.0
48"		–	98.9	130.0	130.0	130.0
54"		–	87.9	121.1	130.0	130.0
58"		–	81.8	112.7	128.2	130.0
60"		–	79.1	109.0	123.9	130.0
66"		–	71.9	99.1	112.7	130.0
30"	108"	–	130.0	130.0	130.0	130.0
36"		–	117.6	130.0	130.0	130.0
42"		–	100.8	130.0	130.0	130.0
48"		–	88.2	121.5	130.0	130.0
54"		–	78.4	108.0	122.8	130.0
58"		–	73.0	100.6	114.3	130.0
60"		–	–	97.2	110.5	130.0
66"		–	–	88.4	100.5	130.0
30"	114"	–	–	130.0	130.0	130.0
36"		–	–	130.0	130.0	130.0
42"		–	–	124.6	130.0	130.0
48"		–	–	109.0	124.0	130.0
54"		–	–	96.9	110.2	130.0
58"		–	–	90.2	102.6	130.0
60"		–	–	87.2	99.2	130.0
30"	120"	–	–	130.0	130.0	130.0
36"		–	–	130.0	130.0	130.0
42"		–	–	112.5	127.9	130.0
48"		–	–	98.4	111.9	130.0
54"		–	–	87.5	99.5	130.0
58"		–	–	81.4	92.6	130.0

JAMB/MULLION LOAD CAPACITY – PSF
WITH OR WITHOUT INTERMEDIATE HORIZONTALS

NOMINAL DIMS.		JAMB 'J1' MULL 'M1'	JAMB 'J2' MULL 'M2'	JAMB 'J3' MULL 'M3'	JAMB 'J4' MULL 'M4'	JAMB 'J4' MULL 'MC'
WIDTH (W)	FRAME HEIGHT	EXT. (+) INT. (–)	EXT. (+) INT. (–)	EXT. (+) INT. (–)	EXT. (+) INT. (–)	EXT. (+) INT. (–)
30"	126"	–	–	130.0	130.0	130.0
36"		–	–	119.0	130.0	130.0
42"		–	–	102.0	116.0	130.0
48"		–	–	89.3	101.5	130.0
54"		–	–	79.3	90.2	130.0
30"	132"	–	–	130.0	130.0	130.0
36"		–	–	108.4	123.3	130.0
42"		–	–	93.0	105.7	130.0
48"		–	–	81.3	92.5	130.0
54"		–	–	72.3	82.2	130.0
30"	138"	–	–	–	130.0	130.0
36"		–	–	–	112.8	130.0
42"		–	–	–	96.7	130.0
48"		–	–	–	84.6	130.0
30"	144"	–	–	–	124.3	130.0
36"		–	–	–	103.6	130.0
42"		–	–	–	88.8	130.0
48"		–	–	–	77.7	130.0

INTERPOLATION BETWEEN WIDTHS OR HEIGHTS ALLOWED.

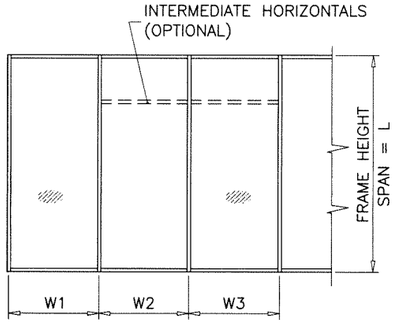

WIDTH (W) = W1
AT FRAME JAMB

WIDTH (W) = $\frac{W2 + W3}{2}$
AT FRAME MULLION

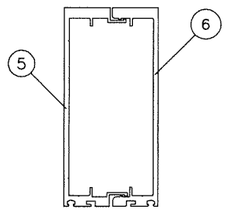

JAMB 'J1'

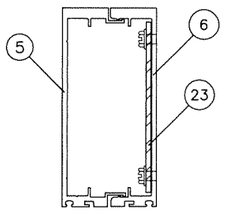

JAMB 'J2'

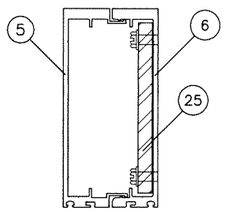

JAMB 'J3'

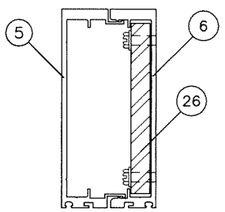

JAMB 'J4'

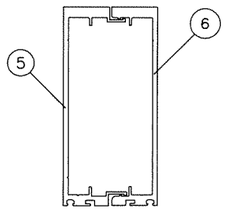

MULLION 'M1'

Ix IN^4	Sx IN^3
10.3928	3.7626

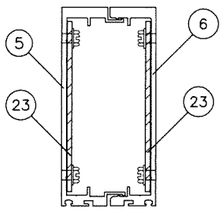

MULLION 'M2'

	Ix IN^4	Sx IN^3
ALUMINUM	10.3928	3.7626
STEEL	.8436	.375
TOTAL Ix ALUM + Ix STL X 2.9	12.815	

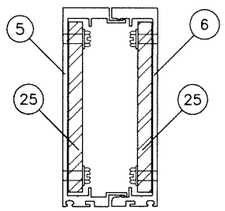

MULLION 'M3'

	Ix IN^4	Sx IN^3
ALUMINUM	10.3928	3.7626
STEEL	2.5312	1.125
TOTAL Ix ALUM + Ix STL X 2.9	17.6606	

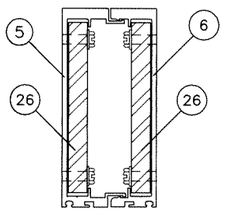

MULLION 'M4'

	Ix IN^4	Sx IN^3
ALUMINUM	10.3928	3.7626
STEEL	3.375	1.5
TOTAL Ix ALUM + Ix STL X 2.9	20.0834	

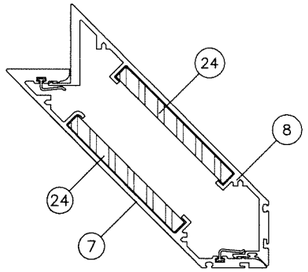

MULLION 'MC'

	Ix IN^4	Sx IN^3
ALUMINUM	15.973	4.045
STEEL	2.0264	1.3094
TOTAL Ix ALUM + Ix STL X 2.9	21.7914	

JAMB TYPES 'J1', 'J2', 'J3' AND MULLION TYPES 'M1', 'M2' & 'M3' APPROVED FOR SINGLE SPANS INSTALLATIONS ONLY.

JAMB TYPE 'J4' AND MULLION TYPES 'M4' & 'MC' APPROVED FOR SINGLE SPANS AND DOUBLE SPANS INSTALLATIONS.

CHART ABOVE SHOWS FRAME HEIGHTS FOR CURTAIN WALL WITHOUT HEAD RECEPTOR.
FOR CURTAIN WALL WITH HEAD RECEPTORS OVERALL HEIGHT = FRAME HT. FROM CHART + 2–1/4".

Sealed: 10/23/2023

JALAL FAROOQ LICENSE No. 81223 STATE OF FLORIDA PROFESSIONAL ENGINEER

FL #27598

afc
AL-FAROOQ CORPORATION
ENGINEERS & PRODUCT DEVELOPMENT
9360 SUNSET DRIVE, SUITE 220
MIAMI, FLORIDA 33173 (C.A.N. 358)
TEL. (305) 264-8100 FAX. (305) 262-6978
COMP-ANL\18-32F-TG

SERIES-5250 ALUMINUM CURTAIN WALL SYSTEM (S.M.I.)

TECNOGLASS, LLC
3550 N.W. 49 STREET
MIAMI, FL. 33142
TEL. (305) 638-5151 FAX. (305) 638-5158

revisions:			
no	date	by	description

date: 06-27-18
scale: –
dr. by: TARIQ
chk. by:

drawing no. 18–32F

sheet 8 of 23

ANCHOR LOAD CAPACITY – PSF (WITHOUT RECEPTOR)
EXT.(+) & INT.(–)

NOMINAL DIMS.		ANCHORS TYPE 'A'									ANCHORS TYPE 'B'								
		1/4" SHIM SPACE			3/8" SHIM SPACE			1/2" SHIM SPACE			1/4" SHIM		3/8" SHIM SPACE			1/2" SHIM SPACE		
WIDTH (W)	FRAME HEIGHT	A3	A4	A5	A3	A4	A5	A3	A4	A5	B3	B4	B3	B4	B5	B3	B4	B5
30"	84"	130.0	130.0	130.0	130.0	130.0	130.0	130.0	130.0	130.0	130.0	130.0	127.7	130.0	130.0	100.6	130.0	130.0
36"		130.0	130.0	130.0	130.0	130.0	130.0	113.4	130.0	130.0	130.0	130.0	106.5	130.0	130.0	83.8	111.8	130.0
42"		130.0	130.0	130.0	124.2	130.0	130.0	97.2	129.6	130.0	130.0	130.0	91.2	121.7	130.0	71.9	95.8	119.8
48"		127.3	130.0	130.0	108.6	130.0	130.0	85.1	113.4	130.0	130.0	130.0	79.8	106.5	130.0	62.9	83.8	104.8
54"		113.1	130.0	130.0	96.6	128.8	130.0	75.6	100.8	126.0	130.0	130.0	71.0	94.6	118.3	55.9	74.5	93.1
58"		105.3	130.0	130.0	89.9	119.9	130.0	70.4	93.9	117.3	130.0	130.0	66.1	88.1	110.1	52.0	69.4	86.7
60"		101.8	130.0	130.0	86.9	115.9	130.0	68.1	90.7	113.4	130.0	130.0	63.9	85.2	106.5	50.3	67.1	83.8
66"		92.6	123.4	130.0	79.0	105.4	130.0	61.9	82.5	103.1	121.9	130.0	58.1	77.4	96.8	45.7	61.0	76.2
72"		84.9	113.1	130.0	72.4	96.6	120.7	56.7	75.6	94.5	111.7	130.0	53.2	71.0	88.7	41.9	55.9	69.9
78"		78.3	104.4	130.0	66.9	89.1	111.4	52.4	69.8	87.3	103.1	130.0	49.1	65.5	81.9	38.7	51.6	64.5
84"		72.7	97.0	121.2	62.1	82.8	103.5	48.6	64.8	81.0	95.8	127.7	45.6	60.8	76.0	35.9	47.9	59.9
30"	90"	130.0	130.0	130.0	130.0	130.0	130.0	127.0	130.0	130.0	130.0	130.0	119.2	130.0	130.0	93.9	125.2	130.0
36"		130.0	130.0	130.0	130.0	130.0	130.0	105.9	130.0	130.0	130.0	130.0	99.4	130.0	130.0	78.2	104.3	130.0
42"		130.0	130.0	130.0	115.9	130.0	130.0	90.7	121.0	130.0	130.0	130.0	85.2	113.6	130.0	67.1	89.4	111.8
48"		118.8	130.0	130.0	101.4	130.0	130.0	79.4	105.9	130.0	130.0	130.0	74.5	99.4	124.2	58.7	78.2	97.8
54"		105.6	130.0	130.0	90.1	120.2	130.0	70.6	94.1	117.6	130.0	130.0	66.2	88.3	110.4	52.2	69.5	86.9
58"		98.3	130.0	130.0	83.9	111.9	130.0	65.7	87.6	109.5	129.4	130.0	61.7	82.2	102.8	48.6	64.8	80.9
60"		95.0	126.7	130.0	81.1	108.2	130.0	63.5	84.7	105.9	125.1	130.0	59.6	79.5	99.4	46.9	62.6	78.2
66"		86.4	115.2	130.0	73.7	98.3	122.9	57.7	77.0	96.2	113.7	130.0	54.2	72.3	90.3	42.7	56.9	71.1
72"		79.2	105.6	130.0	67.6	90.1	112.7	52.9	70.6	88.2	104.3	130.0	49.7	66.2	82.8	39.1	52.2	65.2
78"		73.1	97.5	121.8	62.4	83.2	104.0	48.9	65.1	81.4	96.2	128.3	45.9	61.1	76.4	36.1	48.1	60.2
30"	96"	130.0	130.0	130.0	130.0	130.0	130.0	119.1	130.0	130.0	130.0	130.0	111.8	130.0	130.0	88.0	117.4	130.0
36"		130.0	130.0	130.0	126.8	130.0	130.0	99.3	130.0	130.0	130.0	130.0	93.2	124.2	130.0	73.4	97.8	122.3
42"		127.3	130.0	130.0	108.6	130.0	130.0	85.1	113.4	130.0	130.0	130.0	79.8	106.5	130.0	62.9	83.8	104.8
48"		111.4	130.0	130.0	95.1	126.8	130.0	74.4	99.3	124.1	130.0	130.0	69.9	93.2	116.4	55.0	73.4	91.7
54"		99.0	130.0	130.0	84.5	112.7	130.0	66.2	88.2	110.3	130.0	130.0	62.1	82.8	103.5	48.9	65.2	81.5
58"		92.2	122.9	130.0	78.7	104.9	130.0	61.6	82.1	102.7	121.3	130.0	57.8	77.1	96.4	45.5	60.7	75.9
60"		89.1	118.8	130.0	76.1	101.4	126.8	59.6	79.4	99.3	117.3	130.0	55.9	74.5	93.2	44.0	58.7	73.4
66"		81.0	108.0	130.0	69.1	92.2	115.2	54.1	72.2	90.2	106.6	130.0	50.8	67.7	84.7	40.0	53.3	66.7
72"		74.3	99.0	123.8	63.4	84.5	105.6	49.6	66.2	82.7	97.8	130.0	46.4	62.1	77.6	36.7	48.9	61.1
30"	102"	130.0	130.0	130.0	130.0	130.0	130.0	112.1	130.0	130.0	130.0	130.0	105.2	130.0	130.0	82.8	110.5	130.0
36"		130.0	130.0	130.0	119.3	130.0	130.0	93.4	124.5	130.0	130.0	130.0	87.7	116.9	130.0	69.0	92.0	115.1
42"		119.8	130.0	130.0	102.3	130.0	130.0	80.1	106.8	130.0	130.0	130.0	75.1	100.2	125.2	59.2	78.9	98.6
48"		104.8	130.0	130.0	89.5	119.3	130.0	70.1	93.4	116.8	130.0	130.0	65.8	87.7	109.6	51.8	69.0	86.3
54"		93.2	124.2	130.0	79.5	106.0	130.0	62.3	83.0	103.8	122.7	130.0	58.4	77.9	97.4	46.0	61.4	76.7
58"		86.8	115.7	130.0	74.0	98.7	123.4	58.0	77.3	96.6	114.2	130.0	54.4	72.6	90.7	42.8	57.1	71.4
60"		83.9	111.8	130.0	71.6	95.4	119.3	56.0	74.7	93.4	110.4	130.0	52.6	70.1	87.7	41.4	55.2	69.0
66"		76.2	101.6	127.1	65.1	86.8	108.4	51.0	67.9	84.9	100.4	130.0	47.8	63.8	79.7	37.7	50.2	62.8
30"	108"	130.0	130.0	130.0	130.0	130.0	130.0	105.9	130.0	130.0	130.0	130.0	99.4	130.0	130.0	78.2	104.3	130.0
36"		130.0	130.0	130.0	112.7	130.0	130.0	88.2	117.6	130.0	130.0	130.0	82.8	110.4	130.0	65.2	86.9	108.7
42"		113.1	130.0	130.0	96.6	128.8	130.0	75.6	100.8	126.0	130.0	130.0	71.0	94.6	118.3	55.9	74.5	93.1
48"		99.0	130.0	130.0	84.5	112.7	130.0	66.2	88.2	110.3	130.0	130.0	62.1	82.8	103.5	48.9	65.2	81.5
54"		88.0	117.3	130.0	75.1	100.1	125.2	58.8	78.4	98.0	115.9	130.0	55.2	73.6	92.0	43.5	58.0	72.4
58"		81.9	109.2	130.0	69.9	93.2	116.6	54.8	73.0	91.3	107.9	130.0	51.4	68.5	85.7	40.5	54.0	67.4
60"		79.2	105.6	130.0	67.6	90.1	112.7	52.9	70.6	88.2	104.3	130.0	49.7	66.2	82.8	39.1	52.2	65.2
66"		72.0	96.0	120.0	61.5	81.9	102.4	48.1	64.2	80.2	94.8	126.4	45.2	60.2	75.3	35.6	47.4	59.3
30"	114"	130.0	130.0	130.0	128.1	130.0	130.0	100.3	130.0	130.0	130.0	130.0	94.1	125.5	130.0	74.1	98.8	123.5
36"		125.1	130.0	130.0	106.7	130.0	130.0	83.6	111.4	130.0	130.0	130.0	78.4	104.6	130.0	61.8	82.4	102.9
42"		107.2	130.0	130.0	91.5	122.0	130.0	71.6	95.5	119.4	130.0	130.0	67.2	89.6	112.1	52.9	70.6	88.2
48"		93.8	125.1	130.0	80.1	106.7	130.0	62.7	83.6	104.5	123.5	130.0	58.8	78.4	98.1	46.3	61.8	77.2
54"		83.4	111.2	130.0	71.2	94.9	118.6	55.7	74.3	92.9	109.8	130.0	52.3	69.7	87.2	41.2	54.9	68.6
58"		77.6	103.5	129.4	66.3	88.3	110.4	51.9	69.2	86.5	102.2	130.0	48.7	64.9	81.1	38.3	51.1	63.9
60"		75.0	100.0	125.1	64.0	85.4	106.7	50.1	66.9	83.6	98.8	130.0	47.1	62.8	78.4	37.1	49.4	61.8
30"	120"	130.0	130.0	130.0	121.7	130.0	130.0	95.3	127.0	130.0	130.0	130.0	89.4	119.2	130.0	70.4	93.9	117.4
36"		118.8	130.0	130.0	101.4	130.0	130.0	79.4	105.9	130.0	130.0	130.0	74.5	99.4	124.2	58.7	78.2	97.8
42"		101.8	130.0	130.0	86.9	115.9	130.0	68.1	90.7	113.4	130.0	130.0	63.9	85.2	106.5	50.3	67.1	83.8
48"		89.1	118.8	130.0	76.1	101.4	126.8	59.6	79.4	99.3	117.3	130.0	55.9	74.5	93.2	44.0	58.7	73.4
54"		79.2	105.6	130.0	67.6	90.1	112.7	52.9	70.6	88.2	104.3	130.0	49.7	66.2	82.8	39.1	52.2	65.2
58"		73.7	98.3	122.9	62.9	83.9	104.9	49.3	65.7	82.1	97.1	129.4	46.3	61.7	77.1	36.4	48.6	60.7
30"	126"	130.0	130.0	130.0	115.9	130.0	130.0	90.7	121.0	130.0	130.0	130.0	85.2	113.6	130.0	67.1	89.4	111.8
36"		113.1	130.0	130.0	96.6	128.8	130.0	75.6	100.8	126.0	130.0	130.0	71.0	94.6	118.3	55.9	74.5	93.1
42"		97.0	129.3	130.0	82.8	110.4	130.0	64.8	86.4	108.0	127.7	130.0	60.8	81.1	101.4	47.9	63.9	79.8
48"		84.9	113.1	130.0	72.4	96.6	120.7	56.7	75.6	94.5	111.7	130.0	53.2	71.0	88.7	41.9	55.9	69.9
54"		75.4	100.6	125.7	64.4	85.8	107.3	50.4	67.2	84.0	99.3	130.0	47.3	63.1	78.9	37.3	49.7	62.1

INTERPOLATION BETWEEN WIDTHS OR HEIGHTS ALLOWED.

ANCHOR LOAD CAPACITY – PSF (WITHOUT RECEPTOR)
EXT.(+) & INT.(–)

NOMINAL DIMS.		ANCHORS TYPE 'A'									ANCHORS TYPE 'B'								
		1/4" SHIM SPACE			3/8" SHIM SPACE			1/2" SHIM SPACE			1/4" SHIM		3/8" SHIM SPACE			1/2" SHIM SPACE		
WIDTH (W)	FRAME HEIGHT	A3	A4	A5	A3	A4	A5	A3	A4	A5	B3	B4	B3	B4	B5	B3	B4	B5
30"	132"	129.6	130.0	130.0	110.6	130.0	130.0	86.6	115.5	130.0	130.0	130.0	81.3	108.4	130.0	64.0	85.4	106.7
36"		108.0	130.0	130.0	92.2	122.9	130.0	72.2	96.2	120.3	130.0	130.0	67.7	90.3	112.9	53.3	71.1	88.9
42"		92.6	123.4	130.0	79.0	105.4	130.0	61.9	82.5	103.1	121.9	130.0	58.1	77.4	96.8	45.7	61.0	76.2
48"		81.0	108.0	130.0	69.1	92.2	115.2	54.1	72.2	90.2	106.6	130.0	50.8	67.7	84.7	40.0	53.3	66.7
54"		72.0	96.0	120.0	61.5	81.9	102.4	48.1	64.2	80.2	94.8	126.4	45.2	60.2	75.3	35.6	47.4	59.3
30"	138"	124.0	130.0	130.0	105.8	130.0	130.0	82.9	110.5	130.0	130.0	130.0	77.8	103.7	129.6	61.2	81.6	102.1
36"		103.3	130.0	130.0	88.2	117.6	130.0	69.0	92.1	115.1	130.0	130.0	64.8	86.4	108.0	51.0	68.0	85.0
42"		88.5	118.1	130.0	75.6	100.8	126.0	59.2	78.9	98.6	116.6	130.0	55.5	74.1	92.6	43.7	58.3	72.9
48"		77.5	103.3	129.1	66.1	88.2	110.2	51.8	69.0	86.3	102.0	130.0	48.6	64.8	81.0	38.3	51.0	63.8
30"	144"	118.8	130.0	130.0	101.4	130.0	130.0	79.4	105.9	130.0	130.0	130.0	74.5	99.4	124.2	58.7	78.2	97.8
36"		99.0	130.0	130.0	84.5	112.7	130.0	66.2	88.2	110.3	130.0	130.0	62.1	82.8	103.5	48.9	65.2	81.5
42"		84.9	113.1	130.0	72.4	96.6	120.7	56.7	75.6	94.5	111.7	130.0	53.2	71.0	88.7	41.9	55.9	69.9
48"		74.3	99.0	123.8	63.4	84.5	105.6	49.6	66.2	82.7	97.8	130.0	46.4	62.1	77.6	36.7	48.9	61.1

CHART ABOVE SHOWS FRAME HEIGHTS FOR CURTAIN WALL WITHOUT HEAD RECEPTOR.
FOR CURTAIN WALL WITH HEAD RECEPTORS OVERALL HEIGHT = FRAME HT. FROM CHART + 2–1/4".

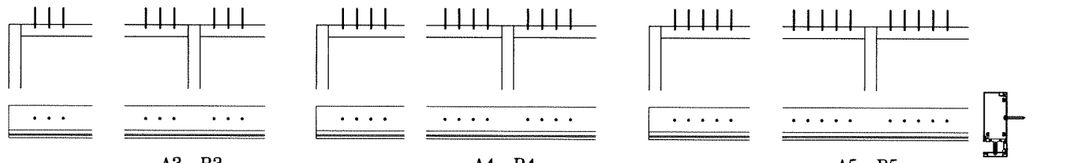

ANCHORS TYPES:

A3 = (3) ANCHORS TYPE 'A' AT EACH SIDE OF JAMB AND MULLION
B3 = (3) ANCHORS TYPE 'B' AT EACH SIDE OF JAMB AND MULLION
A4 = (4) ANCHORS TYPE 'A' AT EACH SIDE OF JAMB AND MULLION
B4 = (4) ANCHORS TYPE 'B' AT EACH SIDE OF JAMB AND MULLION
A5 = (5) ANCHORS TYPE 'A' AT EACH SIDE OF JAMB AND MULLION
B5 = (5) ANCHORS TYPE 'B' AT EACH SIDE OF JAMB AND MULLION

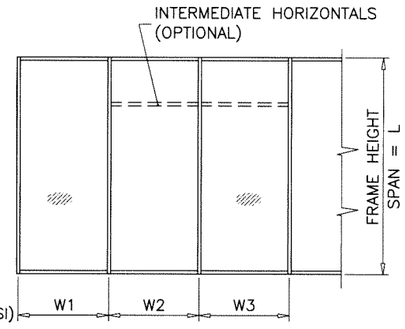

WIDTH (W) = W1
AT FRAME JAMB

WIDTH (W) = $\frac{W2 + W3}{2}$
AT FRAME MULLION

TYPICAL ANCHORS: SEE ELEV. FOR SPACING

TYPE 'A'– 1/4" DIA. KWIK–CON II+ BY 'HILTI' (Fu=138 KSI, Fy=137 KSI)
DIRECTLY INTO CONCRETE
1–3/4" MIN. EMBED INTO CONCRETE (HEAD/SILL)

ANCHOR EDGE DISTANCES
INTO CONCRETE = 2–1/2" MIN.

ANCHOR CL TO CL DISTANCE
INTO CONCRETE = 3" MIN.

TYPE 'B'– 1/4" DIA. TEKS OR SELF–DRILLING SCREWS (GRADE 5 CRS)
INTO METAL STRUCTURES
(3) THREADS MIN. PENETRATION BEYOND METAL SUBSTRATE
ALUMINUM: 1/8" THK. MIN. (6063–T5 MIN.)
STEEL: 1/8" THK. MIN. (Fy = 36 KSI MIN.)
(STEEL IN CONTACT WITH ALUMINUM TO BE PLATED OR PAINTED)

ANCHOR EDGE DISTANCES
INTO METAL STRUCTURE = 1/2" MIN.

CONCRETE AT HEAD OR SILL f'c = 3000 PSI MIN.

FL #27598

JALAL FAROOQ LICENSE No. 81223 STATE OF FLORIDA PROFESSIONAL ENGINEER

Sealed: 10/23/2023

afc
AL-FAROOQ CORPORATION
ENGINEERS & PRODUCT DEVELOPMENT
9360 SUNSET DRIVE, SUITE 220
MIAMI, FLORIDA 33173 (C.A.N. 3538)
TEL. (305) 264-8100 FAX. (305) 262-6978

COMP–ANL\18–32F–TG

SERIES–5250 ALUMINUM CURTAIN WALL SYSTEM (S.M.I.)

TECNOGLASS, LLC
3550 N.W. 49 STREET
MIAMI, FL. 33142
TEL. (305) 638–5151 FAX. (305) 638–5158

revisions:					
no	date	by	description		

date: 06–27–18 | scale: – | dr. by: TARIQ | chk. by:

drawing no. 18–32F

sheet 9 of 23

ANCHOR LOAD CAPACITY – PSF (WITHOUT RECEPTOR)
EXT.(+) & INT.(–)

NOMINAL DIMS.		ANCHORS TYPE 'AA'								ANCHORS TYPE 'BB'							
		1/4" SHIM		3/8" SHIM SPACE			1/2" SHIM SPACE			1/4" SHIM		3/8" SHIM SPACE			1/2" SHIM SPACE		
WIDTH (W)	FRAME HEIGHT	AA3	AA4	AA3	AA4	AA5	AA3	AA4	AA5	BB3	BB4	BB3	BB4	BB5	BB3	BB4	BB5
30"	84"	130.0	130.0	130.0	130.0	130.0	130.0	130.0	130.0	130.0	130.0	130.0	130.0	130.0	130.0	130.0	130.0
36"		130.0	130.0	130.0	130.0	130.0	130.0	130.0	130.0	130.0	130.0	130.0	130.0	130.0	130.0	130.0	130.0
42"		130.0	130.0	130.0	130.0	130.0	130.0	130.0	130.0	130.0	130.0	130.0	130.0	130.0	130.0	130.0	130.0
48"		130.0	130.0	130.0	130.0	130.0	127.0	130.0	130.0	130.0	130.0	130.0	130.0	130.0	126.9	130.0	130.0
54"		130.0	130.0	130.0	130.0	130.0	112.9	130.0	130.0	130.0	130.0	130.0	130.0	130.0	112.8	130.0	130.0
58"		130.0	130.0	130.0	130.0	130.0	105.1	130.0	130.0	130.0	130.0	130.0	130.0	130.0	105.0	130.0	130.0
60"		130.0	130.0	129.6	130.0	130.0	101.6	130.0	130.0	130.0	130.0	127.4	130.0	130.0	101.5	130.0	130.0
66"		130.0	130.0	117.8	130.0	130.0	92.4	123.2	130.0	130.0	130.0	115.8	130.0	130.0	92.3	123.0	130.0
72"		130.0	130.0	108.0	130.0	130.0	84.7	112.9	130.0	130.0	130.0	106.2	130.0	130.0	84.6	112.8	130.0
78"		124.2	130.0	99.7	130.0	130.0	78.2	104.2	130.0	130.0	130.0	98.0	130.0	130.0	78.1	104.1	130.0
84"		115.3	130.0	92.6	123.4	130.0	72.6	96.8	121.0	122.2	130.0	91.0	121.3	130.0	72.5	96.7	120.8
30"	90"	130.0	130.0	130.0	130.0	130.0	130.0	130.0	130.0	130.0	130.0	130.0	130.0	130.0	130.0	130.0	130.0
36"		130.0	130.0	130.0	130.0	130.0	130.0	130.0	130.0	130.0	130.0	130.0	130.0	130.0	130.0	130.0	130.0
42"		130.0	130.0	130.0	130.0	130.0	130.0	130.0	130.0	130.0	130.0	130.0	130.0	130.0	130.0	130.0	130.0
48"		130.0	130.0	130.0	130.0	130.0	118.6	130.0	130.0	130.0	130.0	130.0	130.0	130.0	130.0	130.0	130.0
54"		130.0	130.0	130.0	130.0	130.0	105.4	130.0	130.0	130.0	130.0	130.0	130.0	130.0	118.4	130.0	130.0
58"		130.0	130.0	125.1	130.0	130.0	98.1	130.0	130.0	130.0	130.0	123.0	130.0	130.0	105.2	130.0	130.0
60"		130.0	130.0	121.0	130.0	130.0	94.8	126.5	130.0	130.0	130.0	118.9	130.0	130.0	98.0	126.3	130.0
66"		130.0	130.0	110.0	130.0	130.0	86.2	115.0	130.0	130.0	130.0	108.1	130.0	130.0	94.7	114.8	130.0
72"		125.6	130.0	100.8	130.0	130.0	79.0	105.4	130.0	130.0	130.0	99.1	130.0	130.0	86.1	105.2	130.0
78"		115.9	130.0	93.0	124.1	130.0	73.0	97.3	121.6	122.8	130.0	91.5	122.0	130.0	72.9	97.1	121.4
30"	96"	130.0	130.0	130.0	130.0	130.0	130.0	130.0	130.0	130.0	130.0	130.0	130.0	130.0	130.0	130.0	130.0
36"		130.0	130.0	130.0	130.0	130.0	130.0	130.0	130.0	130.0	130.0	130.0	130.0	130.0	130.0	130.0	130.0
42"		130.0	130.0	130.0	130.0	130.0	127.0	130.0	130.0	130.0	130.0	130.0	130.0	130.0	126.9	130.0	130.0
48"		130.0	130.0	130.0	130.0	130.0	111.2	130.0	130.0	130.0	130.0	130.0	130.0	130.0	111.0	130.0	130.0
54"		130.0	130.0	126.0	130.0	130.0	98.8	130.0	130.0	130.0	130.0	123.9	130.0	130.0	98.7	130.0	130.0
58"		130.0	130.0	117.3	130.0	130.0	92.0	122.6	130.0	130.0	130.0	115.3	130.0	130.0	91.9	122.5	130.0
60"		130.0	130.0	113.4	130.0	130.0	88.9	118.6	130.0	130.0	130.0	111.5	130.0	130.0	88.8	118.4	130.0
66"		128.5	130.0	103.1	130.0	130.0	80.8	107.8	130.0	130.0	130.0	101.3	130.0	130.0	80.7	107.6	130.0
72"		117.8	130.0	94.5	126.0	130.0	74.1	98.8	123.5	124.8	130.0	92.9	123.9	130.0	74.0	98.7	123.3
30"	102"	130.0	130.0	130.0	130.0	130.0	130.0	130.0	130.0	130.0	130.0	130.0	130.0	130.0	130.0	130.0	130.0
36"		130.0	130.0	130.0	130.0	130.0	130.0	130.0	130.0	130.0	130.0	130.0	130.0	130.0	130.0	130.0	130.0
42"		130.0	130.0	130.0	130.0	130.0	119.6	130.0	130.0	130.0	130.0	130.0	130.0	130.0	119.4	130.0	130.0
48"		130.0	130.0	130.0	130.0	130.0	104.6	130.0	130.0	130.0	130.0	130.0	130.0	130.0	104.5	130.0	130.0
54"		130.0	130.0	118.6	130.0	130.0	93.0	124.0	130.0	130.0	130.0	116.6	130.0	130.0	92.9	123.8	130.0
58"		130.0	130.0	110.4	130.0	130.0	86.6	115.4	130.0	130.0	130.0	108.5	130.0	130.0	86.5	115.3	130.0
60"		130.0	130.0	106.7	130.0	130.0	83.7	111.6	130.0	130.0	130.0	104.9	130.0	130.0	83.6	111.4	130.0
66"		120.9	130.0	97.0	129.4	130.0	76.1	101.4	126.8	128.1	130.0	95.4	127.2	130.0	76.0	101.3	126.6
30"	108"	130.0	130.0	130.0	130.0	130.0	130.0	130.0	130.0	130.0	130.0	130.0	130.0	130.0	130.0	130.0	130.0
36"		130.0	130.0	130.0	130.0	130.0	130.0	130.0	130.0	130.0	130.0	130.0	130.0	130.0	130.0	130.0	130.0
42"		130.0	130.0	130.0	130.0	130.0	112.9	130.0	130.0	130.0	130.0	130.0	130.0	130.0	112.8	130.0	130.0
48"		130.0	130.0	126.0	130.0	130.0	98.8	130.0	130.0	130.0	130.0	123.9	130.0	130.0	98.7	130.0	130.0
54"		130.0	130.0	112.0	130.0	130.0	87.8	117.1	130.0	130.0	130.0	110.1	130.0	130.0	87.7	116.9	130.0
58"		129.9	130.0	104.3	130.0	130.0	81.8	109.0	130.0	130.0	130.0	102.5	130.0	130.0	81.7	108.9	130.0
60"		125.6	130.0	100.8	130.0	130.0	79.0	105.4	130.0	130.0	130.0	99.1	130.0	130.0	78.9	105.2	130.0
66"		114.2	130.0	91.6	122.2	130.0	71.9	95.8	119.8	121.0	130.0	90.1	120.1	130.0	71.8	95.7	119.6
30"	114"	130.0	130.0	130.0	130.0	130.0	130.0	130.0	130.0	130.0	130.0	130.0	130.0	130.0	130.0	130.0	130.0
36"		130.0	130.0	130.0	130.0	130.0	124.8	130.0	130.0	130.0	130.0	130.0	130.0	130.0	124.6	130.0	130.0
42"		130.0	130.0	130.0	130.0	130.0	107.0	130.0	130.0	130.0	130.0	130.0	130.0	130.0	106.8	130.0	130.0
48"		130.0	130.0	119.4	130.0	130.0	93.6	124.8	130.0	130.0	130.0	117.3	130.0	130.0	93.5	124.6	130.0
54"		130.0	130.0	106.1	130.0	130.0	83.2	110.9	130.0	130.0	130.0	104.3	130.0	130.0	83.1	110.8	130.0
58"		123.1	130.0	98.8	130.0	130.0	77.5	103.3	129.1	130.0	130.0	97.1	129.5	130.0	77.4	103.1	128.9
60"		119.0	130.0	95.5	127.3	130.0	74.9	99.8	124.8	126.1	130.0	93.9	125.2	130.0	74.8	99.7	124.6
30"	120"	130.0	130.0	130.0	130.0	130.0	130.0	130.0	130.0	130.0	130.0	130.0	130.0	130.0	130.0	130.0	130.0
36"		130.0	130.0	130.0	130.0	130.0	118.6	130.0	130.0	130.0	130.0	130.0	130.0	130.0	118.4	130.0	130.0
42"		130.0	130.0	129.6	130.0	130.0	101.6	130.0	130.0	130.0	130.0	127.4	130.0	130.0	101.5	130.0	130.0
48"		130.0	130.0	113.4	130.0	130.0	88.9	118.6	130.0	130.0	130.0	111.5	130.0	130.0	88.8	118.4	130.0
54"		125.6	130.0	100.8	130.0	130.0	79.0	105.4	130.0	130.0	130.0	99.1	130.0	130.0	78.9	105.2	130.0
58"		116.9	130.0	93.8	125.1	130.0	73.6	98.1	122.6	123.9	130.0	92.3	123.0	130.0	73.5	98.0	122.5
30"	126"	130.0	130.0	130.0	130.0	130.0	130.0	130.0	130.0	130.0	130.0	130.0	130.0	130.0	130.0	130.0	130.0
36"		130.0	130.0	130.0	130.0	130.0	112.9	130.0	130.0	130.0	130.0	130.0	130.0	130.0	112.8	130.0	130.0
42"		130.0	130.0	123.4	130.0	130.0	96.8	129.0	130.0	130.0	130.0	121.3	130.0	130.0	96.7	128.9	130.0
48"		130.0	130.0	108.0	130.0	130.0	84.7	112.9	130.0	130.0	130.0	106.2	130.0	130.0	84.6	112.8	130.0
54"		119.6	130.0	96.0	128.0	130.0	75.3	100.4	125.5	126.7	130.0	94.4	125.8	130.0	75.2	100.2	125.3

INTERPOLATION BETWEEN WIDTHS OR HEIGHTS ALLOWED.

ANCHOR LOAD CAPACITY – PSF (WITHOUT RECEPTOR)
EXT.(+) & INT.(–)

NOMINAL DIMS.		ANCHORS TYPE 'AA'								ANCHORS TYPE 'BB'							
		1/4" SHIM		3/8" SHIM SPACE			1/2" SHIM SPACE			1/4" SHIM		3/8" SHIM SPACE			1/2" SHIM SPACE		
WIDTH (W)	FRAME HEIGHT	AA3	AA4	AA3	AA4	AA5	AA3	AA4	AA5	BB3	BB4	BB3	BB4	BB5	BB3	BB4	BB5
30"	132"	130.0	130.0	130.0	130.0	130.0	129.3	130.0	130.0	130.0	130.0	130.0	130.0	130.0	129.2	130.0	130.0
36"		130.0	130.0	130.0	130.0	130.0	107.8	130.0	130.0	130.0	130.0	130.0	130.0	130.0	107.6	130.0	130.0
42"		130.0	130.0	117.8	130.0	130.0	92.4	123.2	130.0	130.0	130.0	115.8	130.0	130.0	92.3	123.0	130.0
48"		128.5	130.0	103.1	130.0	130.0	80.8	107.8	130.0	130.0	130.0	101.3	130.0	130.0	80.7	107.6	130.0
54"		114.2	130.0	91.6	122.2	130.0	71.9	95.8	119.8	121.0	130.0	90.1	120.1	130.0	71.8	95.7	119.6
30"	138"	130.0	130.0	130.0	130.0	130.0	123.7	130.0	130.0	130.0	130.0	130.0	130.0	130.0	123.5	130.0	130.0
36"		130.0	130.0	130.0	130.0	130.0	103.1	130.0	130.0	130.0	130.0	129.3	130.0	130.0	103.0	130.0	130.0
42"		130.0	130.0	112.7	130.0	130.0	88.4	117.8	130.0	130.0	130.0	110.8	130.0	130.0	88.2	117.7	130.0
48"		122.9	130.0	98.6	130.0	130.0	77.3	103.1	128.9	130.0	130.0	96.9	129.3	130.0	77.2	103.0	128.7
30"	144"	130.0	130.0	130.0	130.0	130.0	118.6	130.0	130.0	130.0	130.0	130.0	130.0	130.0	118.4	130.0	130.0
36"		130.0	130.0	126.0	130.0	130.0	98.8	130.0	130.0	130.0	130.0	123.9	130.0	130.0	98.7	130.0	130.0
42"		130.0	130.0	108.0	130.0	130.0	84.7	112.9	130.0	130.0	130.0	106.2	130.0	130.0	84.6	112.8	130.0
48"		117.8	130.0	94.5	126.0	130.0	74.1	98.8	123.5	124.8	130.0	92.9	123.9	130.0	74.0	98.7	123.3

CHART ABOVE SHOWS FRAME HEIGHTS FOR CURTAIN WALL WITHOUT HEAD RECEPTOR.
FOR CURTAIN WALL WITH HEAD RECEPTORS OVERALL HEIGHT = FRAME HT. FROM CHART + 2–1/4".

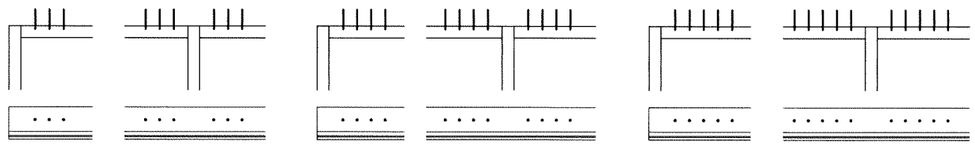

ANCHORS TYPES:

AA3 = (3) ANCHORS TYPE 'AA' AT EACH SIDE OF JAMB AND MULLION
BB3 = (3) ANCHORS TYPE 'BB' AT EACH SIDE OF JAMB AND MULLION
AA4 = (4) ANCHORS TYPE 'AA' AT EACH SIDE OF JAMB AND MULLION
BB4 = (4) ANCHORS TYPE 'BB' AT EACH SIDE OF JAMB AND MULLION
AA5 = (5) ANCHORS TYPE 'AA' AT EACH SIDE OF JAMB AND MULLION
BB5 = (5) ANCHORS TYPE 'BB' AT EACH SIDE OF JAMB AND MULLION

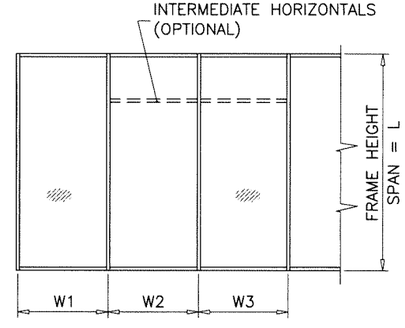

WIDTH (W) = W1
AT FRAME JAMB

WIDTH (W) = $\frac{W2 + W3}{2}$
AT FRAME MULLION

TYPICAL ANCHORS: SEE ELEV. FOR SPACING

TYPE 'AA'– 5/16" DIA. ULTRACON BY 'DEWALT' (Fu=177 KSI, Fy=155 KSI)
DIRECTLY INTO CONCRETE
1–3/4" MIN. EMBED INTO CONCRETE (HEAD/SILL)

ANCHOR EDGE DISTANCES
INTO CONCRETE = 3" MIN.

ANCHOR CL TO CL DISTANCE
INTO CONCRETE = 3" MIN.

TYPE 'BB'– 5/16" DIA. TEKS OR SELF–DRILLING SCREWS (GRADE 5 CRS)
INTO METAL STRUCTURES
(3) THREADS MIN. PENETRATION BEYOND METAL SUBSTRATE
ALUMINUM: 1/8" THK. MIN. (6063–T5 MIN.)
STEEL: 1/8" THK. MIN. (Fy = 36 KSI MIN.)
(STEEL IN CONTACT WITH ALUMINUM TO BE PLATED OR PAINTED)

ANCHOR EDGE DISTANCES
INTO METAL STRUCTURE = 1/2" MIN.

CONCRETE AT HEAD OR SILL f'c = 3000 PSI MIN.

FL #27598

JALAL FAROOQ LICENSE No. 81223 STATE OF FLORIDA PROFESSIONAL ENGINEER

Sealed: 10/23/2023

AL-FAROOQ CORPORATION
ENGINEERS & PRODUCT DEVELOPMENT
9360 SUNSET DRIVE, SUITE 220
MIAMI, FLORIDA 33173 (C.A.N. 3538)
TEL. (305) 264-8100 FAX. (305) 262-6978

COMP–ANL\18–32F–TG

SERIES–5250 ALUMINUM CURTAIN WALL SYSTEM (S.M.I.)

TECNOGLASS, LLC
3550 N.W. 49 STREET
MIAMI, FL. 33142
TEL. (305) 638–5151 FAX. (305) 638–5158

revisions:			
no	date	by	description

date: 06–27–18 | scale: – | dr. by: TARIQ | chk. by:

drawing no. 18–32F

ANCHOR LOAD CAPACITY – PSF (WITH RECEPTOR) EXT.(+) & INT.(–)					
NOMINAL DIMS.		ANCHORS TYPE 'AA'			ANCHORS 'BB'
WIDTH (W)	FRAME HEIGHT	AA3	AA4	AA5	BB3
30"	84"	130.0	130.0	130.0	130.0
36"		130.0	130.0	130.0	130.0
42"		130.0	130.0	130.0	130.0
48"		130.0	130.0	130.0	130.0
54"		117.0	130.0	130.0	130.0
58"		109.0	130.0	130.0	130.0
60"		105.0	130.0	130.0	130.0
66"		96.0	128.0	130.0	130.0
72"		88.0	117.0	130.0	130.0
78"		81.0	108.0	130.0	130.0
84"		75.0	100.0	125.0	130.0
30"	90"	130.0	130.0	130.0	130.0
36"		130.0	130.0	130.0	130.0
42"		130.0	130.0	130.0	130.0
48"		123.0	130.0	130.0	130.0
54"		109.0	130.0	130.0	130.0
58"		102.0	130.0	130.0	130.0
60"		98.0	130.0	130.0	130.0
66"		89.0	119.0	130.0	130.0
72"		82.0	109.0	130.0	130.0
78"		76.0	101.0	126.0	130.0
30"	96"	130.0	130.0	130.0	130.0
36"		130.0	130.0	130.0	130.0
42"		130.0	130.0	130.0	130.0
48"		115.0	130.0	130.0	130.0
54"		102.0	130.0	130.0	130.0
58"		95.0	127.0	130.0	130.0
60"		92.0	123.0	130.0	130.0
66"		84.0	112.0	130.0	130.0
72"		77.0	102.0	128.0	130.0
30"	102"	130.0	130.0	130.0	130.0
36"		130.0	130.0	130.0	130.0
42"		124.0	130.0	130.0	130.0
48"		108.0	130.0	130.0	130.0
54"		96.0	128.0	130.0	130.0
58"		90.0	119.0	130.0	130.0
60"		87.0	116.0	130.0	130.0
66"		79.0	105.0	130.0	130.0
30"	108"	130.0	130.0	130.0	130.0
36"		130.0	130.0	130.0	130.0
42"		117.0	130.0	130.0	130.0
48"		102.0	130.0	130.0	130.0
54"		91.0	121.0	130.0	130.0
58"		85.0	113.0	130.0	130.0
60"		82.0	109.0	130.0	130.0
66"		74.0	99.0	124.0	130.0
30"	114"	130.0	130.0	130.0	130.0
36"		129.0	130.0	130.0	130.0
42"		111.0	130.0	130.0	130.0
48"		97.0	129.0	130.0	130.0
54"		86.0	115.0	130.0	130.0
58"		8.0	107.0	130.0	130.0
60"		78.0	103.0	129.0	130.0
30"	120"	130.0	130.0	130.0	130.0
36"		123.0	130.0	130.0	130.0
42"		105.0	130.0	130.0	130.0
48"		92.0	123.0	130.0	130.0
54"		82.0	109.0	130.0	130.0
58"		76.0	102.0	127.0	130.0
30"	126"	130.0	130.0	130.0	130.0
36"		117.0	130.0	130.0	130.0
42"		100.0	130.0	130.0	130.0
48"		88.0	117.0	130.0	130.0
54"		78.0	104.0	130.0	130.0

ANCHOR LOAD CAPACITY – PSF (WITH RECEPTOR) EXT.(+) & INT.(–)					
NOMINAL DIMS.		ANCHORS TYPE 'AA'			ANCHORS 'BB'
WIDTH (W)	FRAME HEIGHT	AA3	AA4	AA5	BB3
30"	132"	130.0	130.0	130.0	130.0
36"		112.0	130.0	130.0	130.0
42"		96.0	128.0	130.0	130.0
48"		84.0	112.0	130.0	130.0
54"		74.0	99.0	124.0	130.0
30"	138"	128.0	130.0	130.0	130.0
36"		107.0	130.0	130.0	130.0
42"		91.0	122.0	130.0	130.0
48"		80.0	107.0	130.0	130.0
30"	144"	123.0	130.0	130.0	130.0
36"		102.0	130.0	130.0	130.0
42"		88.0	117.0	130.0	130.0
48"		77.0	102.0	128.0	130.0

CHART ABOVE SHOWS FRAME HEIGHTS FOR CURTAIN WALL WITHOUT HEAD RECEPTOR.
FOR CURTAIN WALL WITH HEAD RECEPTORS OVERALL HEIGHT = FRAME HT. FROM CHART + 2–1/4".

INTERPOLATION BETWEEN WIDTHS OR HEIGHTS ALLOWED.

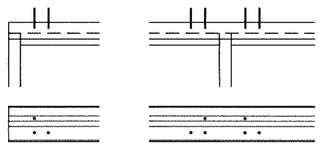

AA3, BB3

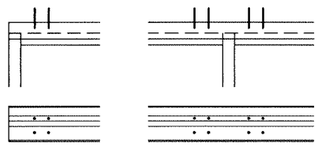

AA4

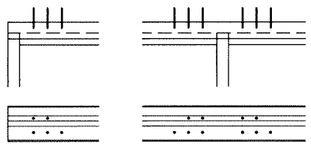

AA5



DOUBLE ROW
WITH HEAD RECEPTOR

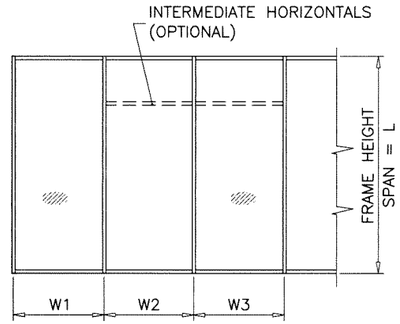

WIDTH (W) = W1
AT FRAME JAMB

WIDTH (W) = $\frac{W2 + W3}{2}$
AT FRAME MULLION

ANCHORS TYPES:

AA3 = (3) ANCHORS TYPE 'AA' AT EACH SIDE OF JAMB AND MULLION
BB3 = (3) ANCHORS TYPE 'BB' AT EACH SIDE OF JAMB AND MULLION
AA4 = (4) ANCHORS TYPE 'AA' AT EACH SIDE OF JAMB AND MULLION
AA5 = (5) ANCHORS TYPE 'AA' AT EACH SIDE OF JAMB AND MULLION

TYPICAL ANCHORS: SEE ELEV. FOR SPACING

TYPE 'AA'– 5/16" DIA. ULTRACON BY 'DEWALT' (Fu=177 KSI, Fy=155 KSI)
DIRECTLY INTO CONCRETE
1–3/4" MIN. EMBED INTO CONCRETE (HEAD/SILL)

ANCHOR EDGE DISTANCES
INTO CONCRETE = 3" MIN.

ANCHOR CL TO CL DISTANCE
INTO CONCRETE = 3" MIN.

TYPE 'BB'– 5/16" DIA. TEKS OR SELF–DRILLING SCREWS (GRADE 5 CRS)
INTO METAL STRUCTURES
(3) THREADS MIN. PENETRATION BEYOND METAL SUBSTRATE
ALUMINUM: 1/8" THK. MIN. (6063–T5 MIN.)
STEEL: 1/8" THK. MIN. (Fy = 36 KSI MIN.)
(STEEL IN CONTACT WITH ALUMINUM TO BE PLATED OR PAINTED)

ANCHOR EDGE DISTANCES
INTO METAL STRUCTURE = 1/2" MIN.

CONCRETE AT HEAD OR SILL f'c = 3000 PSI MIN.

Sealed: 10/23/2023

FL #27598

AL-FAROOQ CORPORATION
ENGINEERS & PRODUCT DEVELOPMENT
9360 SUNSET DRIVE, SUITE 220
MIAMI, FLORIDA 33173 (C.A.N. 3538)
TEL. (305) 264-8100 FAX. (305) 262-6978

COMP–ANL\18–32F–TG

SERIES–5250 ALUMINUM CURTAIN WALL SYSTEM (S.M.I.)

TECNOGLASS, LLC
3550 N.W. 49 STREET
MIAMI, FL. 33142
TEL. (305) 638–5158 FAX. (305) 638–5151

revisions:

no	date	by	description

date: 06–27–18
scale: –
dr. by: TARIQ
chk. by:

drawing no. 18–32F

sheet 10.1 of 23

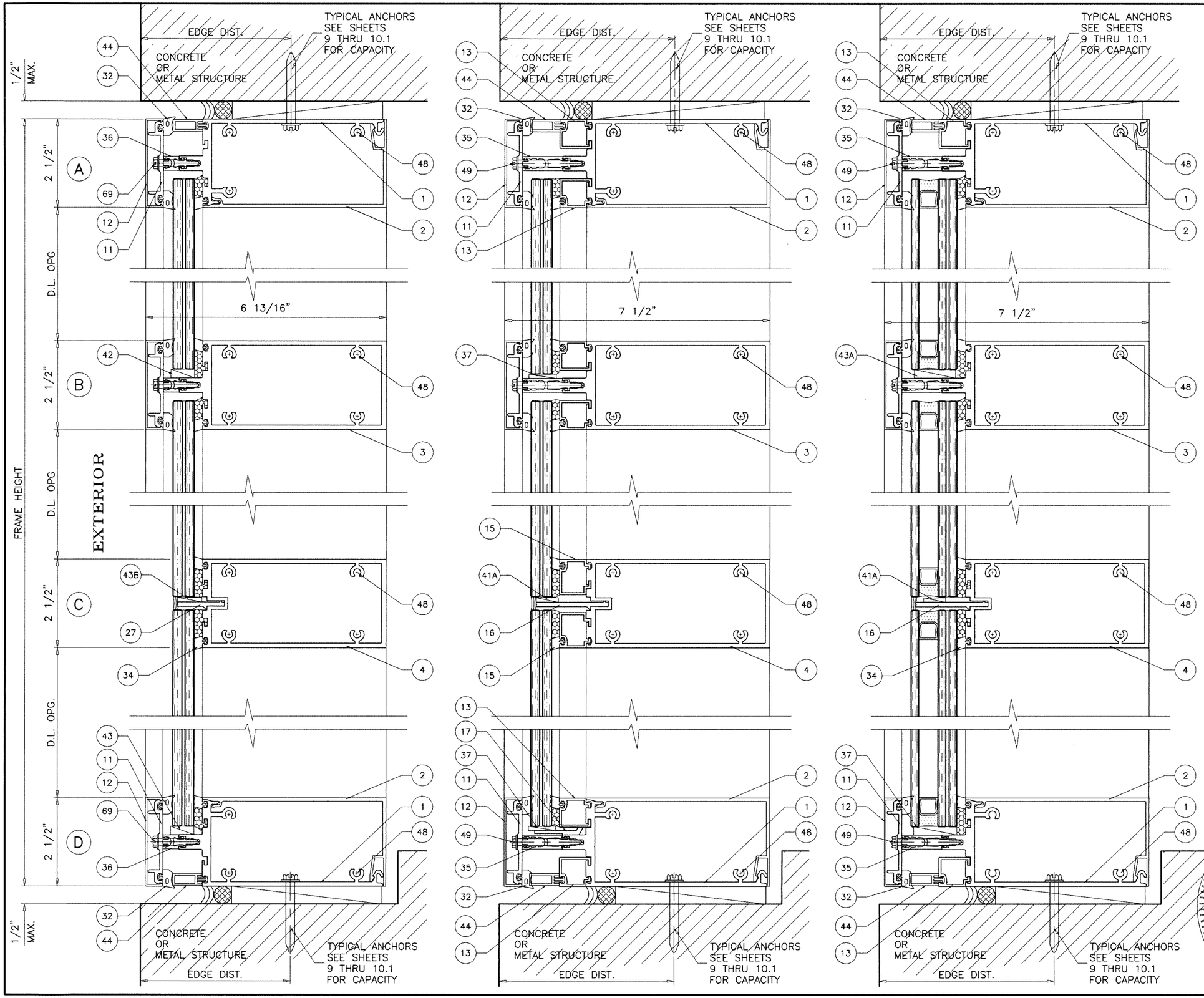

Sealed: 10/23/2023

FL #27598

JALAL FAROOQ LICENSE No. 81223 STATE OF FLORIDA PROFESSIONAL ENGINEER

AL-FAROOQ CORPORATION
ENGINEERS & PRODUCT DEVELOPMENT
9360 SUNSET DRIVE, SUITE 220
MIAMI, FLORIDA 33173 *(C.A.N. 3538)*
TEL. (305) 264-8100 FAX. (305) 262-6978

COMP-ANL\18-32F-TG

SERIES-5250 ALUMINUM CURTAIN WALL SYSTEM (S.M.I.)

TECNOGLASS, LLC
3550 N.W. 49 STREET
MIAMI, FL. 33142
TEL. (305) 638-5151 FAX. (305) 638-5158

revisions:

no	date	by	description

date: 06-27-18
scale: 3/8" = 1"
dr. by: TARIQ
chk. by:

drawing no. 18-32F

sheet 11 of 23

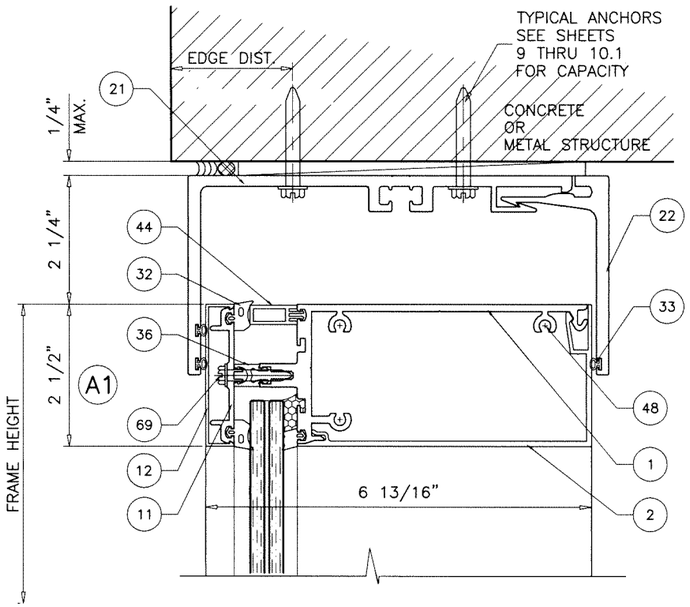

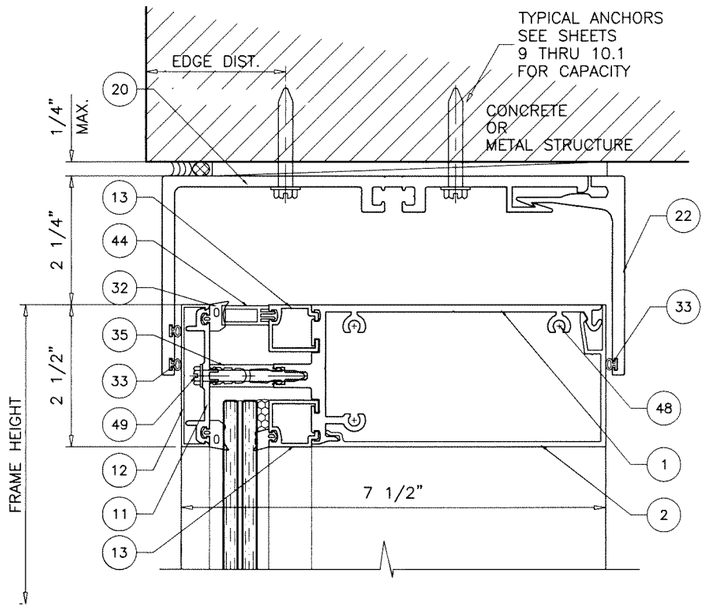

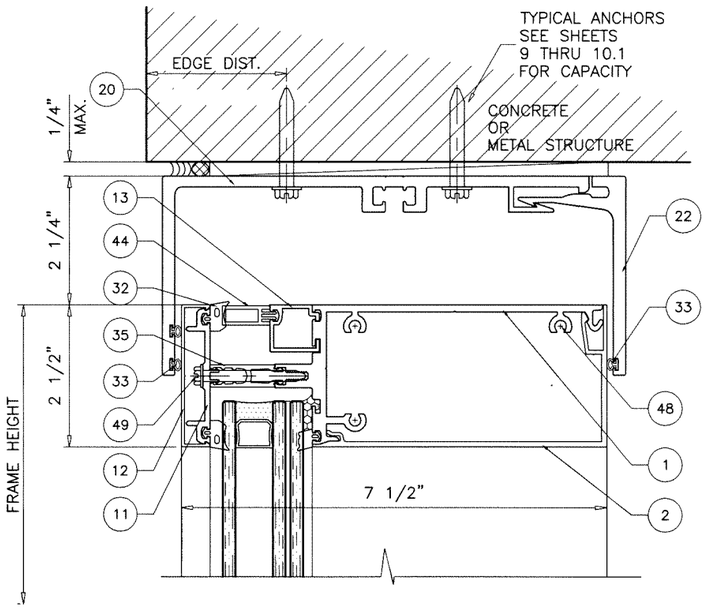

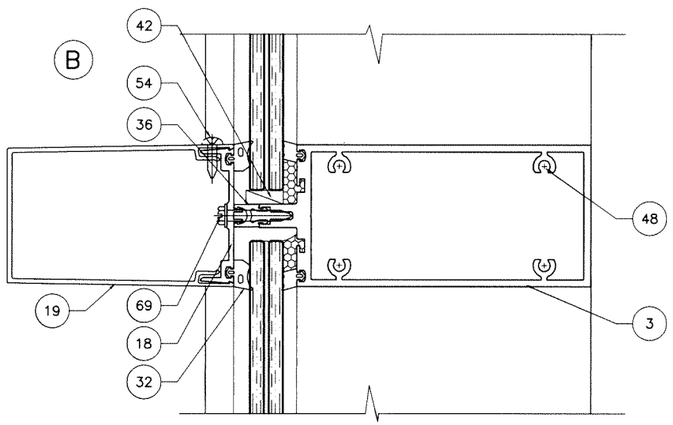

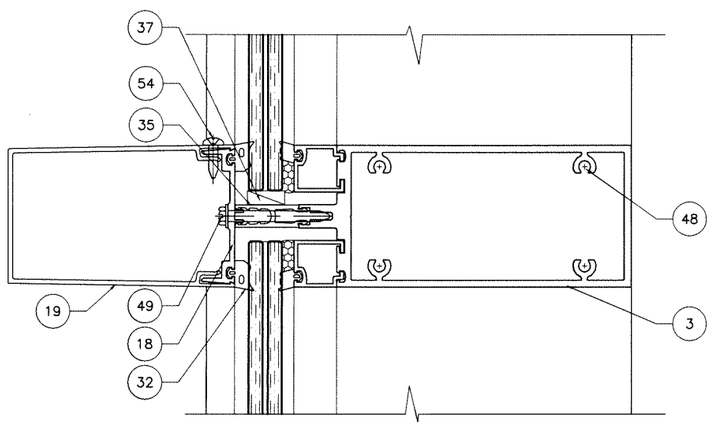

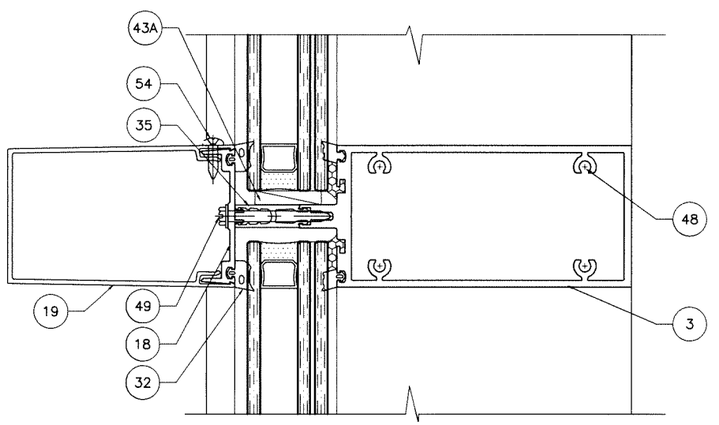

Sealed: 10/23/2023

FL #27598

AL-FAROOQ CORPORATION
ENGINEERS & PRODUCT DEVELOPMENT
9360 SUNSET DRIVE, SUITE 220
MIAMI, FLORIDA 33173 (C.A.N. 3538)
TEL. (305) 264-8100 FAX. (305) 262-6978

COMP-ANL\18-32F-TG

SERIES-5250 ALUMINUM CURTAIN WALL SYSTEM (S.M.I.)

TECNOGLASS, LLC
3550 N.W. 49 STREET
MIAMI, FL. 33142
TEL. (305) 638-5151 FAX. (305) 638-5158

revisions:

no	date	by	description

date: 06-27-18
scale: 3/8" = 1"
dr. by: TARIQ
chk. by:

drawing no. 18-32F

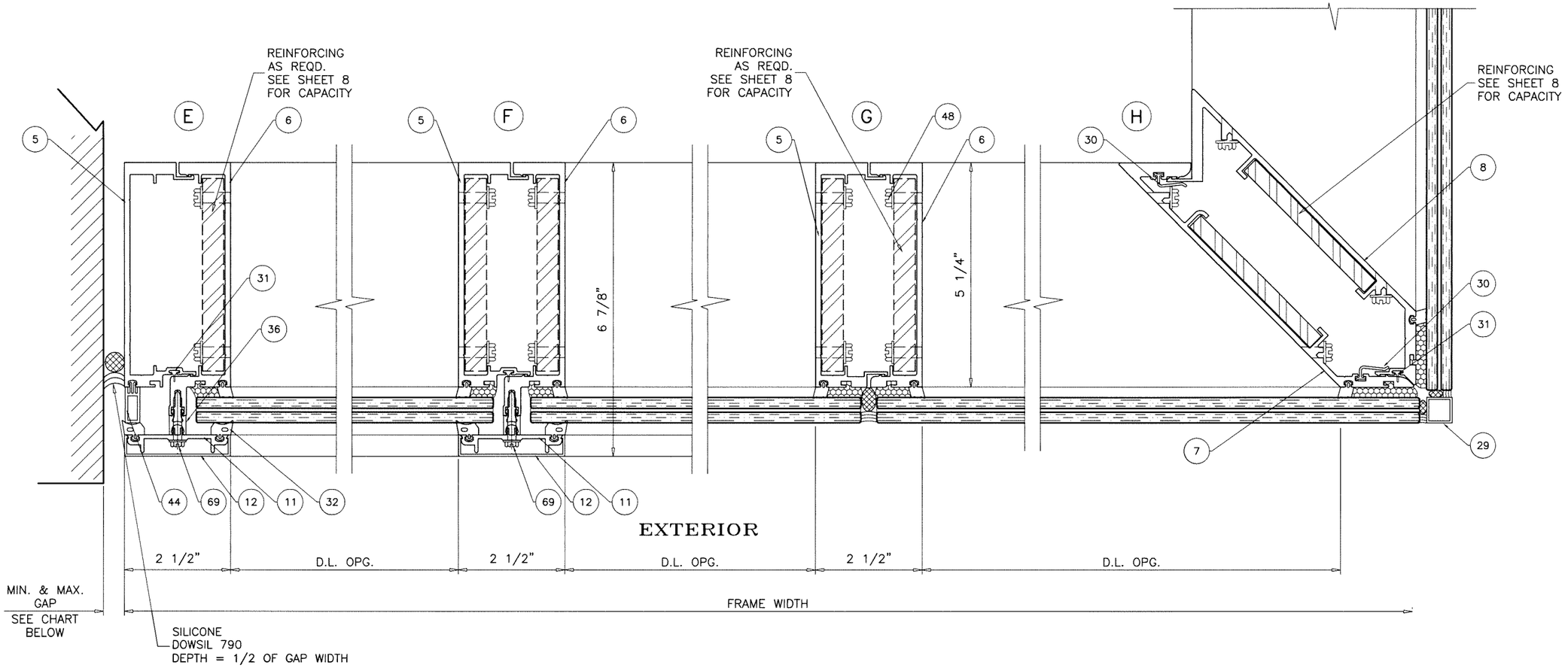

MAX. FRAME HEIGHT	GAP	
	MIN.	MAX.
96"	5/16"	3/4"
120"	3/8"	3/4"
144"	1/2"	3/4"

NOTE:
MAX. MOVEMENT CONSIDERED=100% STRETCH.
PLEASE REFER TO SEALANT MANUFACTURER'S DATA AND APPLICATION MANUAL FOR COMPATABILITY OF SEALANT TO SUBSTRATE & WINDOWALL MATERIAL/FINISH AND COMPLIANCE FOR WARRANTY.
REFER TO ACI-117-10 FOR CONSTRUCTION TOLERANCES.

ALTERNATE SEALANTS AT JAMB GAPS CAN BE DESIGNED BY ENGINEER OF RECORD BASED ON MANUFACTURER GUIDE LINES.

GAPS LESS THAN 1/4" MAY BE DESIGNED BY ENGINEER OF RECORD BY THE USE OF BOND BREAKER TAPE OR 15% OF GAP ALLOWED MOVEMENT.

Sealed: 10/23/2023

JALAL FAROOQ
LICENSE
No. 81223
STATE OF FLORIDA
PROFESSIONAL ENGINEER

FL #27598

AL-FAROOQ CORPORATION
ENGINEERS & PRODUCT DEVELOPMENT
9360 SUNSET DRIVE, SUITE 220
MIAMI, FLORIDA 33173 (C.A.N. 3538)
TEL. (305) 264-8100 FAX. (305) 262-6978

COMP-ANL\18-32F-TG

SERIES-5250 ALUMINUM CURTAIN WALL SYSTEM (S.M.I.)

TECNOGLASS, LLC
3550 N.W. 49 STREET
MIAMI, FL. 33142
TEL. (305) 638-5151 FAX. (305) 638-5158

revisions:

no	date	by	description

date: 06-27-18
scale: 3/8" = 1"
dr. by: TARIQ
chk. by:

drawing no. 18-32F

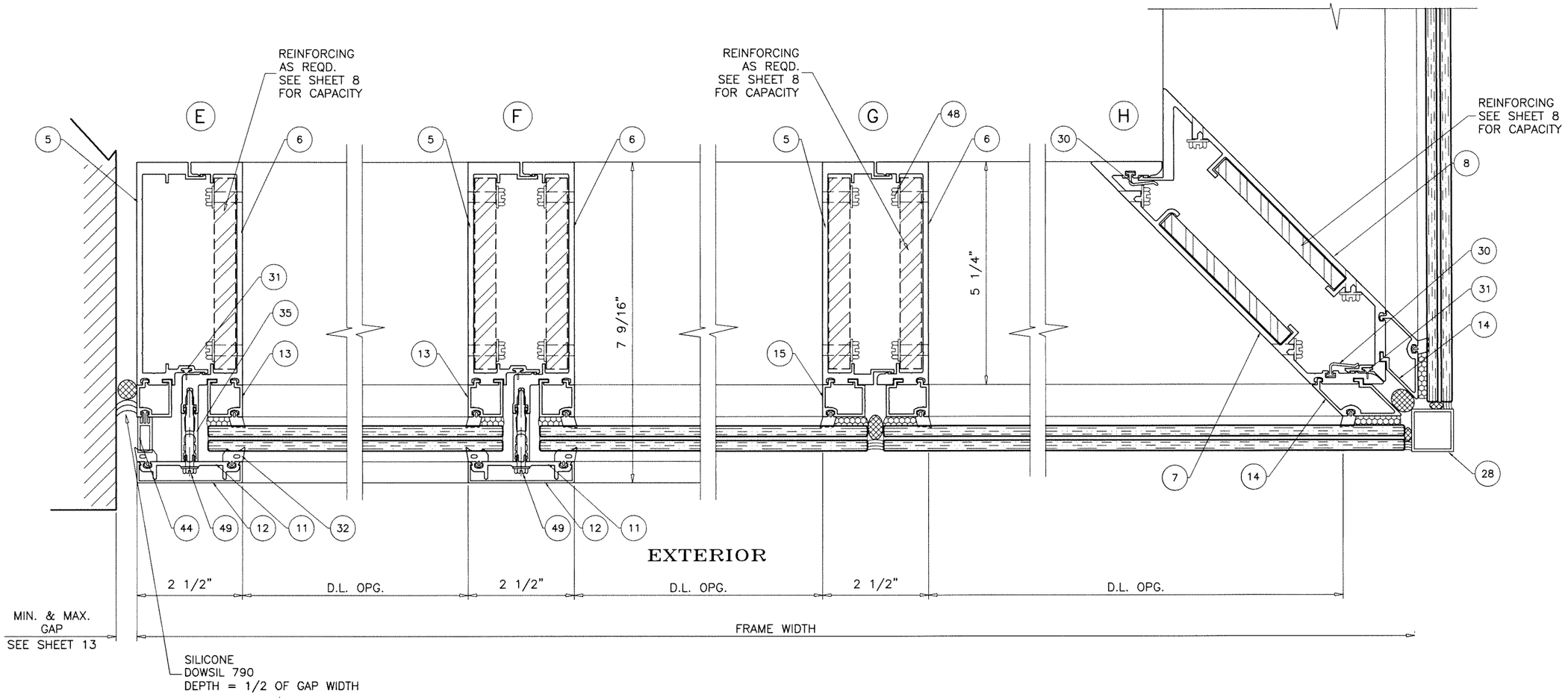

Sealed: 10/23/2023

FL #27598

JALAL FAROOQ
LICENSE
No. 61223
STATE OF FLORIDA
PROFESSIONAL ENGINEER

AL-FAROOQ CORPORATION
ENGINEERS & PRODUCT DEVELOPMENT
9360 SUNSET DRIVE, SUITE 220
MIAMI, FLORIDA 33173 (C.A.N. 3538)
TEL. (305) 264-8100 FAX. (305) 262-6978

COMP-ANL\18-32F-TG

SERIES-5250 ALUMINUM CURTAIN WALL SYSTEM (S.M.I.)

TECNOGLASS, LLC
3550 N.W. 49 STREET
MIAMI, FL. 33142
TEL. (305) 638-5151 FAX. (305) 638-5158

revisions:

no	date	by	description

date: 06-27-18
scale: 3/8" = 1"
dr. by: TARIQ
chk. by:

drawing no.
18-32F

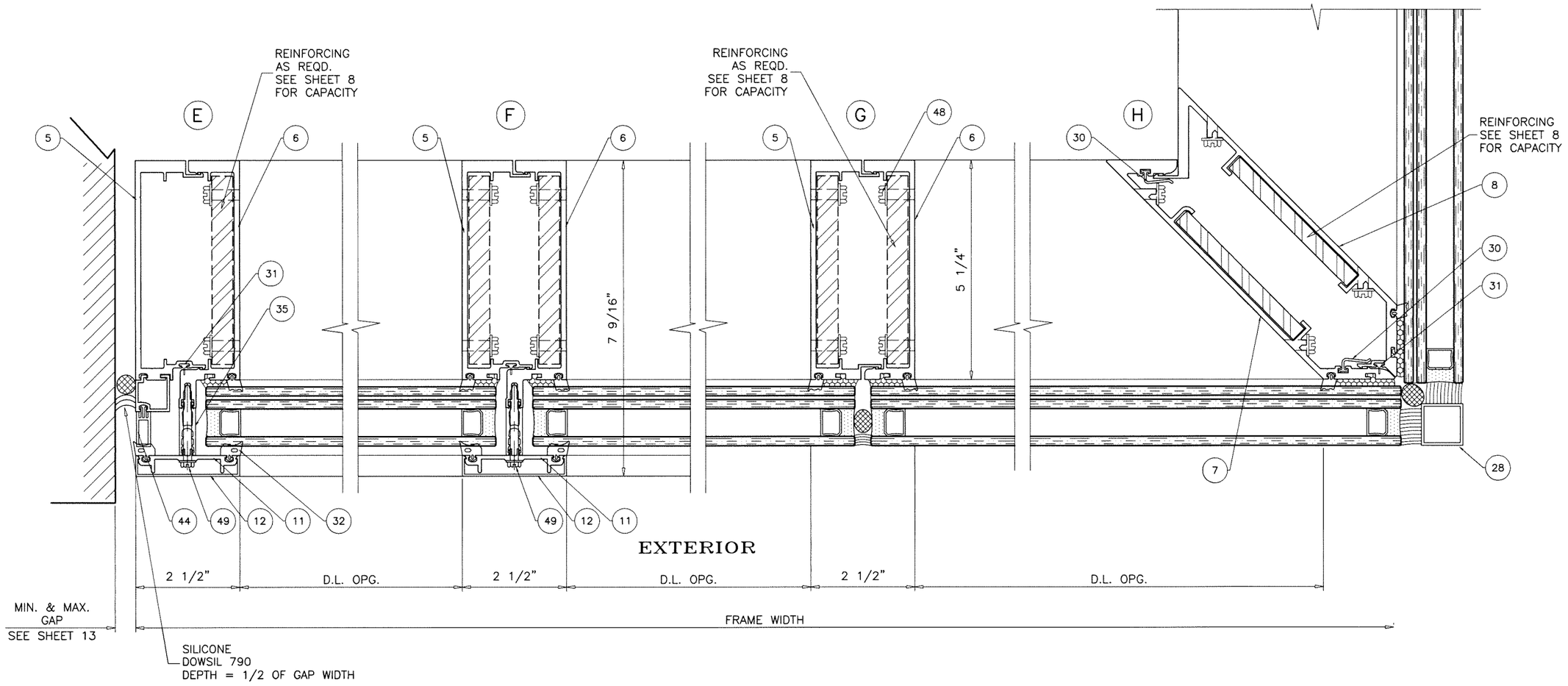

Sealed: 10/23/2023

FL #27598

JALAL FAROOQ
LICENSE
No. 81223
STATE OF FLORIDA
PROFESSIONAL ENGINEER

AL-FAROOQ CORPORATION
ENGINEERS & PRODUCT DEVELOPMENT
9360 SUNSET DRIVE, SUITE 220
MIAMI, FLORIDA 33173 (C.A.N. 3538)
TEL. (305) 264-8100 FAX. (305) 262-6978

COMP-ANL\18-32F-TG

SERIES-5250 ALUMINUM CURTAIN WALL SYSTEM (S.M.I.)

TECNOGLASS, LLC
3550 N.W. 49 STREET
MIAMI, FL. 33142
TEL. (305) 638-5151 FAX. (305) 638-5158

revisions:

no	date	by	description

date: 06-27-18
scale: 3/8" = 1"
dr. by: TARIQ
chk. by:

drawing no.
18-32F

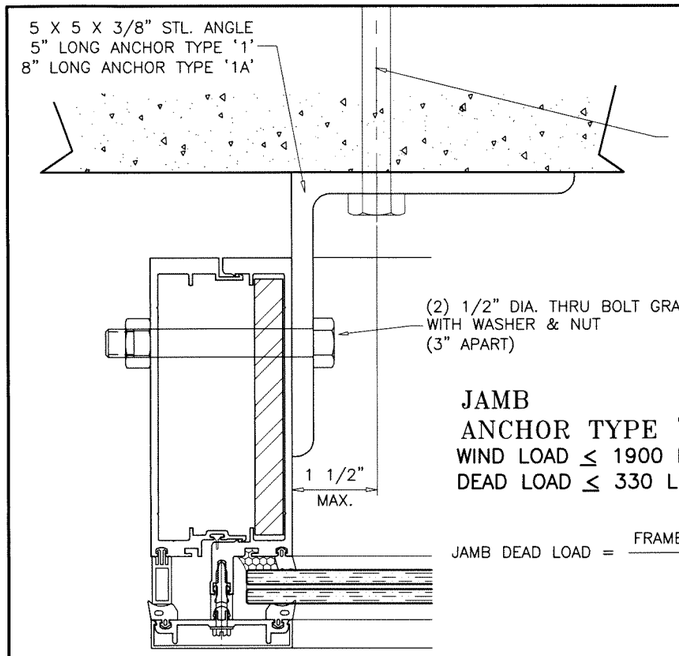

ANCHOR TYPE '1'
1/2" DIA. POWERS WEDGE–BOLT
1 PER ANGLE
4" MIN. EMBED
4" MIN. EDGE DIST.
OR
ANCHOR TYPE '1A'
1/2" DIA. SCREW–BOLT+ BY 'DEWALT'
2 PER ANGLE
4–1/4" MIN. EMBED
4" C/C SPACING
2" MIN. EDGE DIST.

JAMB ANCHOR TYPE '1'	JAMB ANCHOR TYPE '1A'
WIND LOAD ≤ 1900 LBS	WIND LOAD ≤ 1600 LBS
DEAD LOAD ≤ 330 LBS	DEAD LOAD ≤ 275 LBS

$$\text{JAMB DEAD LOAD} = \frac{\text{FRAME WIDTH (FT.) X FRAME HT. (FT.)}}{2} \text{ X 11 PSF}$$

DETAIL '4A'

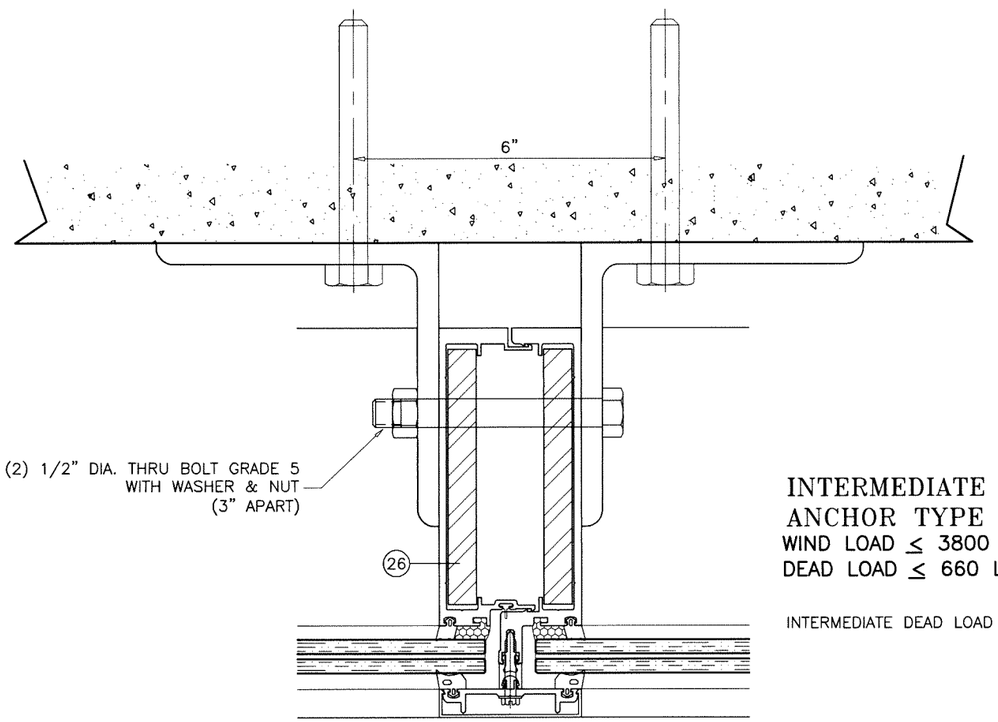

INTERMEDIATE ANCHOR TYPE '1'	INTERMEDIATE ANCHOR TYPE '1A'
WIND LOAD ≤ 3800 LBS	WIND LOAD ≤ 4200 LBS
DEAD LOAD ≤ 660 LBS	DEAD LOAD ≤ 550 LBS

INTERMEDIATE DEAD LOAD = FRAME WIDTH (FT.) X FRAME HT. (FT.) X 11 PSF

MIDSPAN ANCHOR
INTO 4000 PSI MIN. CONCRETE

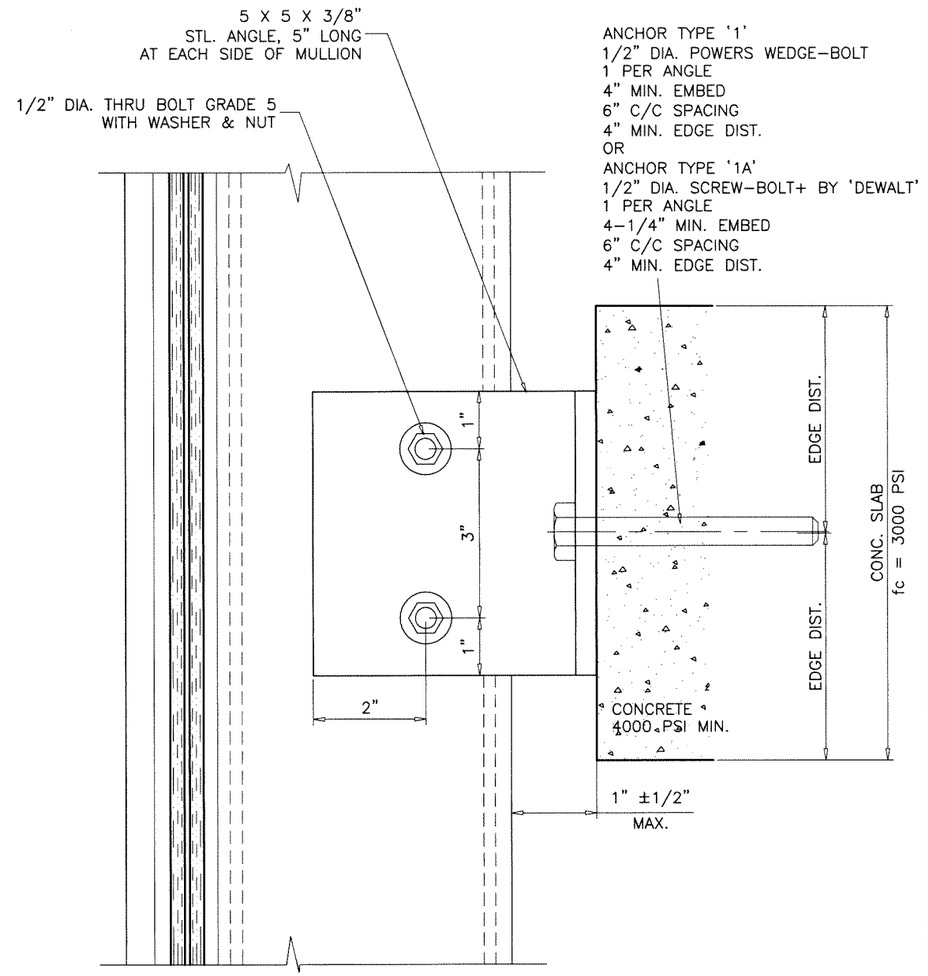

INTERMEDIATE ANCHORS

Sealed: 10/23/2023

JALAL FAROOQ LICENSE No. 81223 STATE OF FLORIDA PROFESSIONAL ENGINEER

FL #27598

AL-FAROOQ CORPORATION
ENGINEERS & PRODUCT DEVELOPMENT
9360 SUNSET DRIVE, SUITE 220
MIAMI, FLORIDA 33173 (C.A.N. 3538)
TEL. (305) 264-8100 FAX. (305) 262-6978

COMP–ANL\18–32F–TG

SERIES–5250 ALUMINUM CURTAIN WALL SYSTEM (S.M.I.)

TECNOGLASS, LLC
3550 N.W. 49 STREET
MIAMI, FL. 33142
TEL. (305) 638–5151 FAX. (305) 638–5158

revisions: no	date	by	description

date: 06–27–18
scale: 3/8" = 1"
dr. by: TARIQ
chk. by:

drawing no. 18–32F

sheet 16 of 23

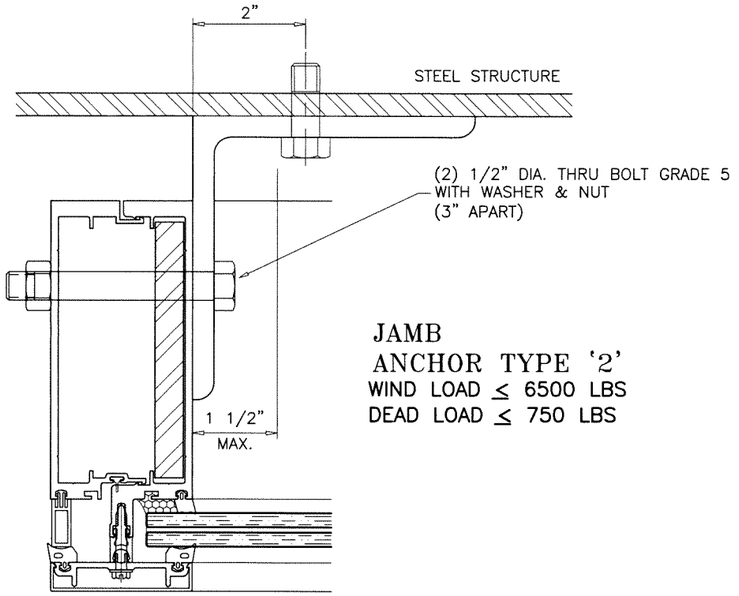

JAMB
ANCHOR TYPE '2'
WIND LOAD ≤ 6500 LBS
DEAD LOAD ≤ 750 LBS

DETAIL '4A' (ALT.)

ALL WELDS = 1/4" FILLET, WELDING ELECTRODE E-70
EMBEDED STEEL STUD IS NOT PART OF THIS APPROVAL.

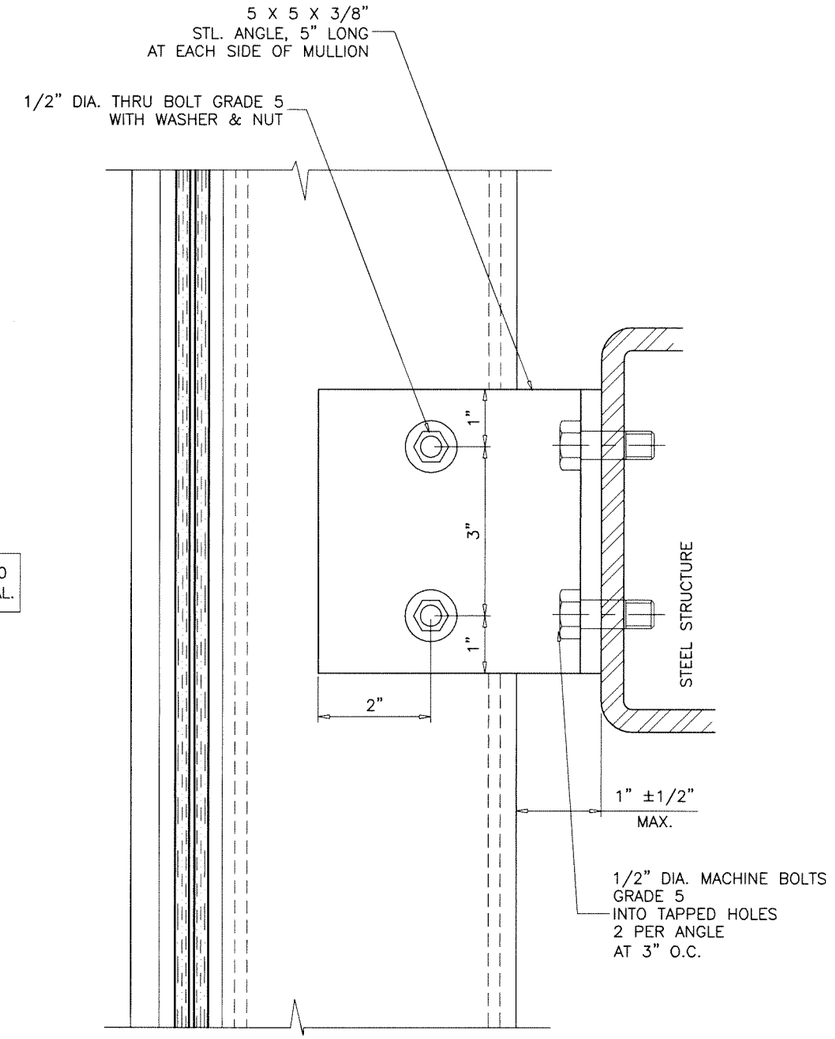

INTERMEDIATE ANCHORS

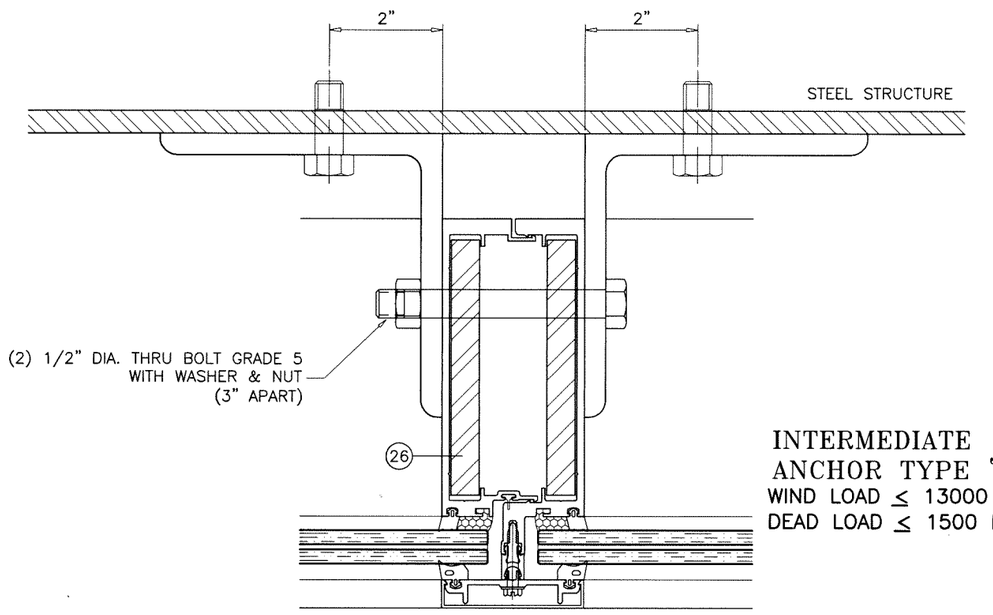

INTERMEDIATE
ANCHOR TYPE '2'
WIND LOAD ≤ 13000 LBS
DEAD LOAD ≤ 1500 LBS

MIDSPAN ANCHOR
INTO 1/4" THK. MIN. CCOMMERCIAL STEEL

Sealed: 10/23/2023

FL #27598

JALAL FAROOQ LICENSE No. 81223 STATE OF FLORIDA PROFESSIONAL ENGINEER

afc

AL-FAROOQ CORPORATION
ENGINEERS & PRODUCT DEVELOPMENT
9360 SUNSET DRIVE, SUITE 220
MIAMI, FLORIDA 33173 *(C.A.N. 3538)*
TEL. (305) 264-8100 FAX. (305) 262-6978

COMP-ANL\18-32F-TG

SERIES-5250 ALUMINUM CURTAIN WALL SYSTEM (S.M.I.)

TECNOGLASS, LLC
3550 N.W. 49 STREET
MIAMI, FL. 33142
TEL. (305) 638-5151 FAX. (305) 638-5158

revisions:

no	date	by	description

date: 06-27-18
scale: 3/8" = 1"
dr. by: TARIQ
chk. by:

drawing no.
18-32F

sheet 17 of 23

INTERMEDIATE ANCHOR TYPE '1'

WIND LOAD ≤ 1900 LBS (EACH SIDE)
DEAD LOAD ≤ 330 LBS (EACH SIDE)

INTERMEDIATE ANCHOR TYPE '1A'

WIND LOAD ≤ 2100 LBS (EACH SIDE)
DEAD LOAD ≤ 275 LBS (EACH SIDE)

CORNER MULLION DEAD LOAD (EACH SIDE) = $\frac{\text{FRAME WIDTH (FT.) X FRAME HT. (FT.)}}{2}$ X 11 PSF

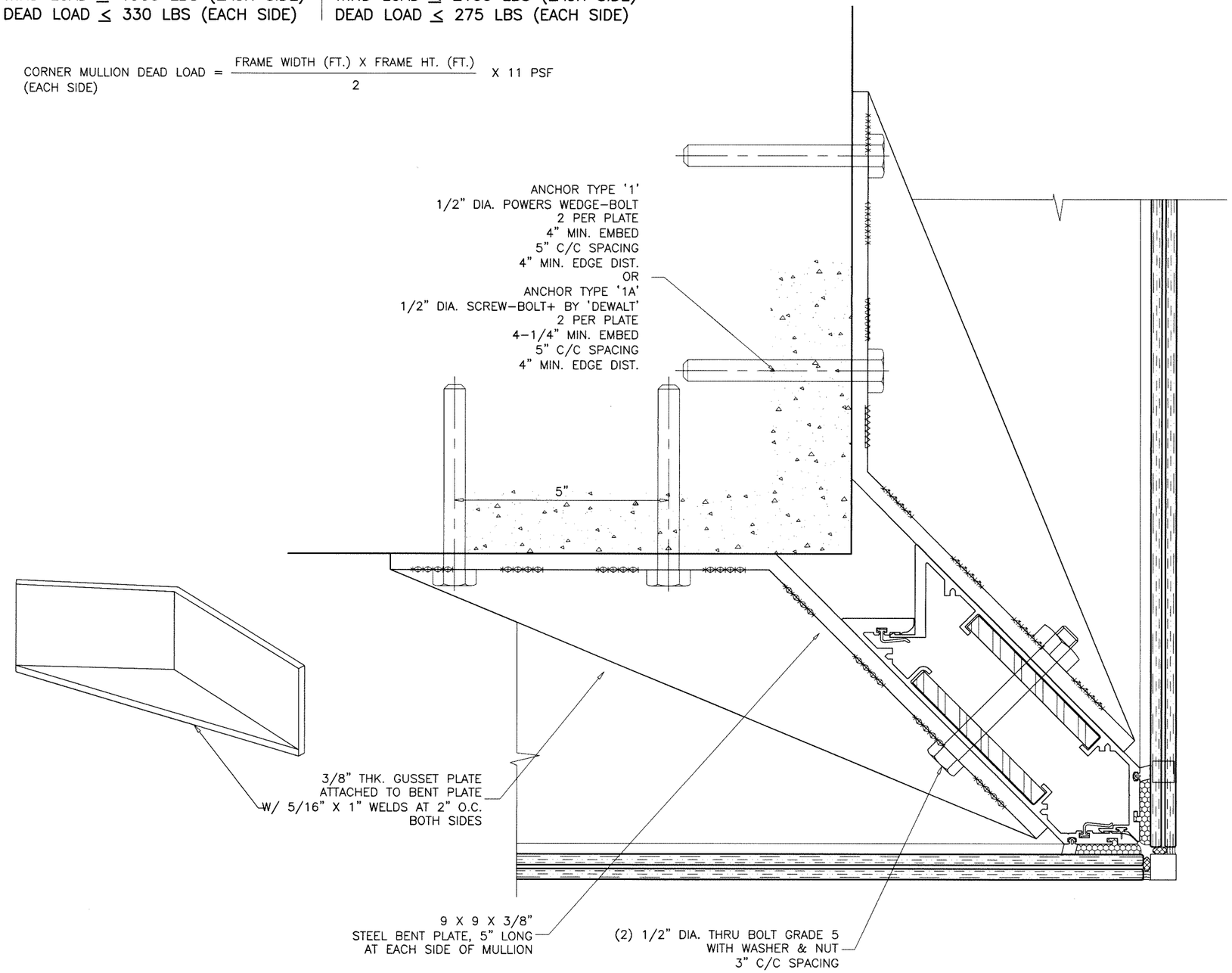

CORNER MULLION ANCHORS

MIDSPAN ANCHOR
INTO 4000 PSI MIN. CONCRETE

Sealed: 10/23/2023

FL #27598

JALAL FAROOQ LICENSE No. 81223 STATE OF FLORIDA PROFESSIONAL ENGINEER

AL-FAROOQ CORPORATION
ENGINEERS & PRODUCT DEVELOPMENT
9360 SUNSET DRIVE, SUITE 220
MIAMI, FLORIDA 33173 (C.A.N. 3538)
TEL. (305) 264-8100 FAX. (305) 262-6978

COMP-ANL\18-32F-TG

SERIES-5250 ALUMINUM CURTAIN WALL SYSTEM (S.M.I.)

TECNOGLASS, LLC
3550 N.W. 49 STREET
MIAMI, FL. 33142
TEL. (305) 638-5151 FAX. (305) 638-5158

revisions:			
no	date	by	description

date: 06-27-18
scale: 3/8" = 1"
dr. by: TARIQ
chk. by:

drawing no. 18-32F

INTERMEDIATE
ANCHOR
WIND LOAD ≤ 6500 LBS (EACH SIDE)
DEAD LOAD ≤ 750 LBS (EACH SIDE)

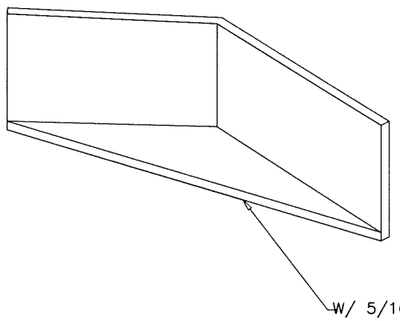

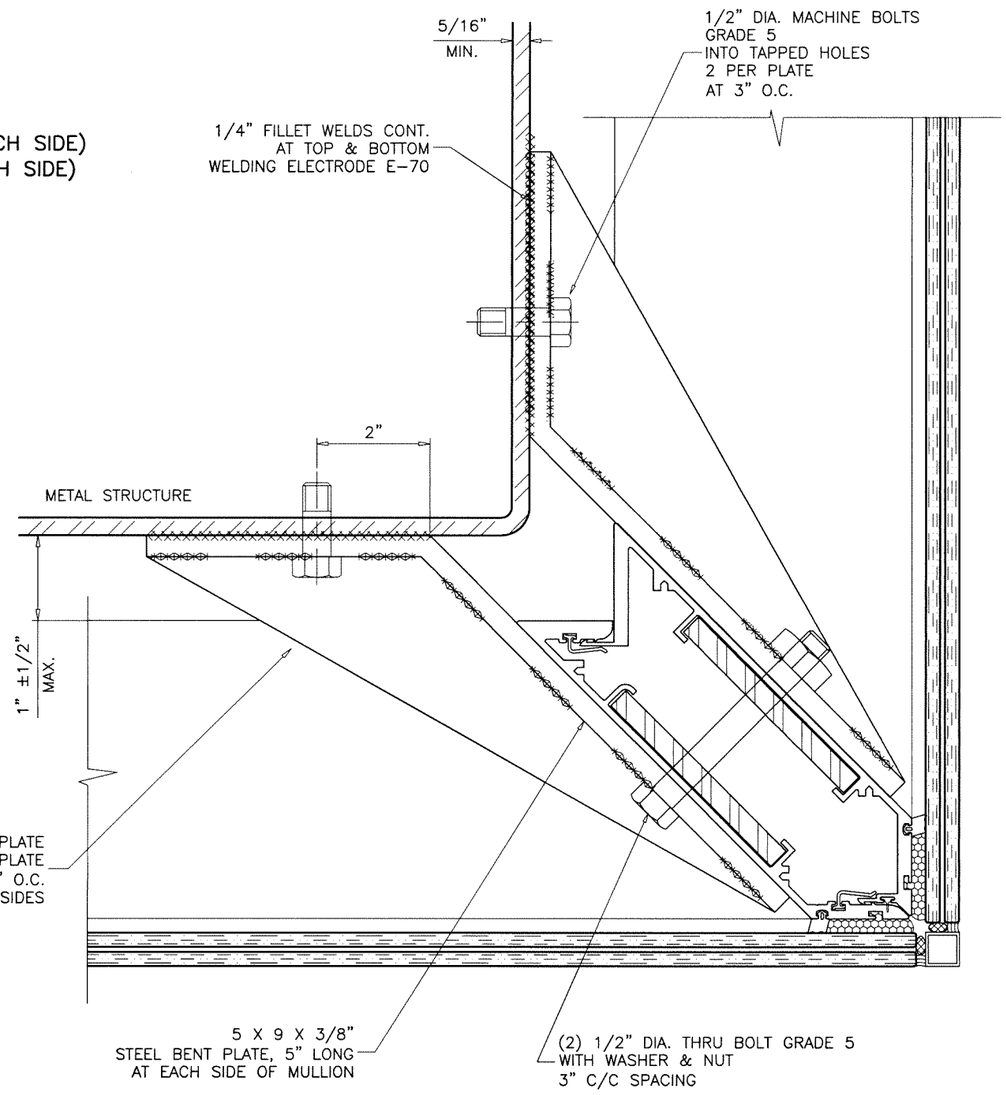

ALL WELDS = 1/4" FILLET, WELDING ELECTRODE E-70
EMBEDED STEEL STUD IS NOT PART OF THIS APPROVAL.

CORNER MULLION ANCHORS

MIDSPAN ANCHOR
INTO 1/4" THK. MIN. CCOMMERCIAL STEEL

Sealed: 10/23/2023

FL #27598

JALAL FAROOQ LICENSE No. 81223 STATE OF FLORIDA PROFESSIONAL ENGINEER

AL-FAROOQ CORPORATION
ENGINEERS & PRODUCT DEVELOPMENT
9360 SUNSET DRIVE, SUITE 220
MIAMI, FLORIDA 33173 (C.A.N. 3538)
TEL. (305) 264-8100 FAX. (305) 262-6978

COMP-ANL\18-32F-TG

SERIES-5250 ALUMINUM CURTAIN WALL SYSTEM (S.M.I.)

TECNOGLASS, LLC
3550 N.W. 49 STREET
MIAMI, FL. 33142
TEL. (305) 638-5151 FAX. (305) 638-5158

revisions:

no	date	by	description

date: 06-27-18
scale: 3/8" = 1"
dr. by: TARIQ
chk. by:

drawing no.
18-32F

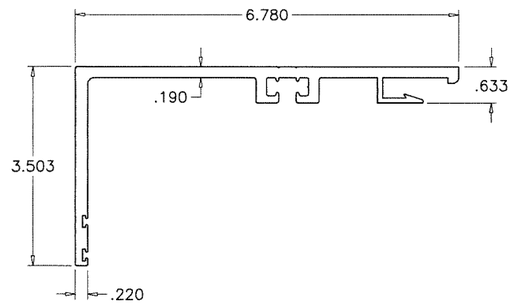

(21) EXTERIOR HEAD RECEPTOR (6-7/8")

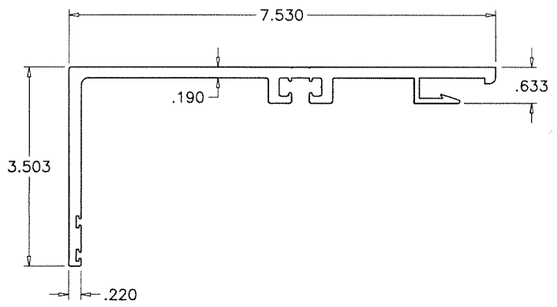

(20) EXTERIOR HEAD RECEPTOR (7-1/2")

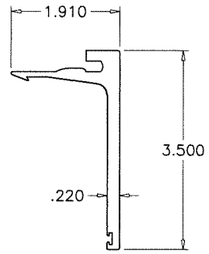

(22) HEAD RECEPTOR BACK

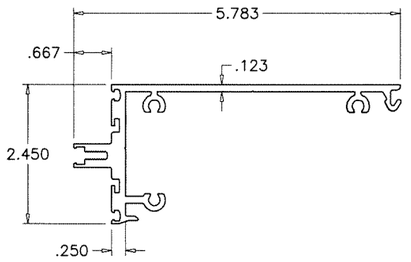

(1) FRAME HEAD/SILL

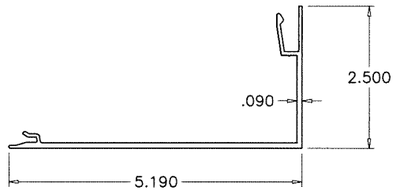

(2) HEAD/SILL COVER

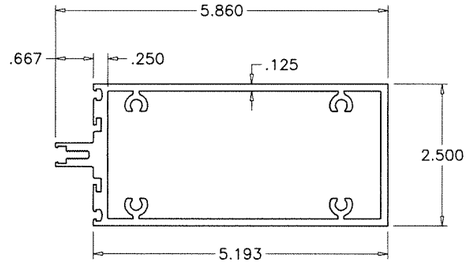

(3) FRAME HORIZONTAL

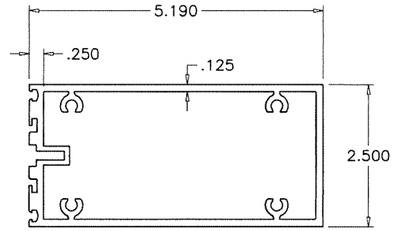

(4) FRAME HORIZONTAL SSG

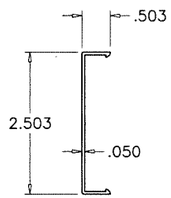

(12) PRESSURE PLATE COVER

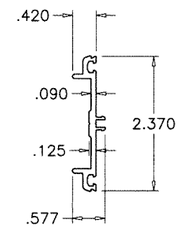

(11) PRESSURE PLATE

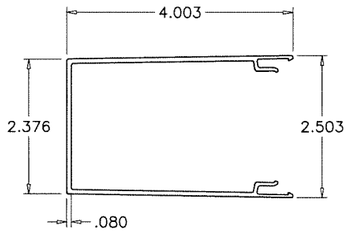

(19) EXTENDED CAP

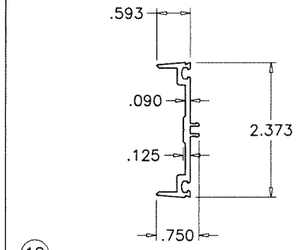

(18) PRESSURE PLATE EXTENDED CAP

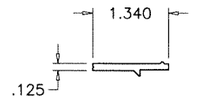

(27) GLAZING SHELF

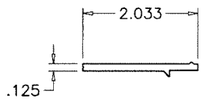

(16) GLAZING SHELF

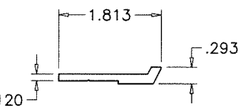

(17) GLASS SHELF SUPPORT

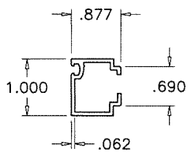

(15) STRUCTURAL GLAZING ADAPTER

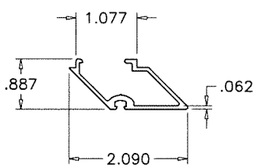

(14) 90° GLAZING ADAPTER

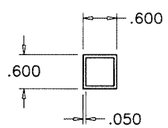

(29) FILLER TUBE

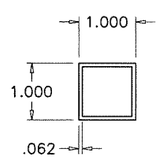

(28) FILLER TUBE

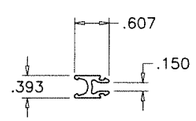

(36) 9/16" CW SPACER

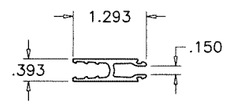

(35) 1-5/16" CW SPACER

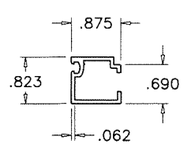

(13) GLAZING ADAPTER

Sealed: 10/23/2023

FL #27598

AL-FAROOQ CORPORATION
ENGINEERS & PRODUCT DEVELOPMENT
9360 SUNSET DRIVE, SUITE 220
MIAMI, FLORIDA 33173 (C.A.N. 3538)
TEL. (305) 264-8100 FAX. (305) 262-6978

COMP-ANL\18-32F-TG

SERIES-5250 ALUMINUM CURTAIN WALL SYSTEM (S.M.I.)

TECNOGLASS, LLC
3550 N.W. 49 STREET
MIAMI, FL. 33142
TEL. (305) 638-5151 FAX. (305) 638-5158

revisions:

no	date	by	description

date: 06-27-18
scale: 3/8" = 1"
dr. by: TARIQ
chk. by:

drawing no. 18-32F

sheet 20 of 23

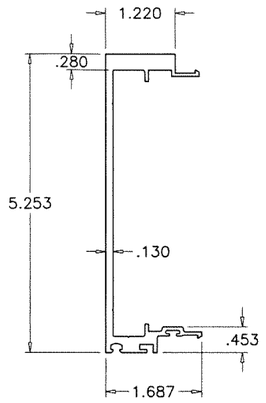

(5) MALE MULLION

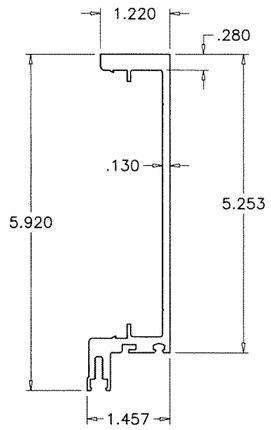

(6) FEMALE MULLION

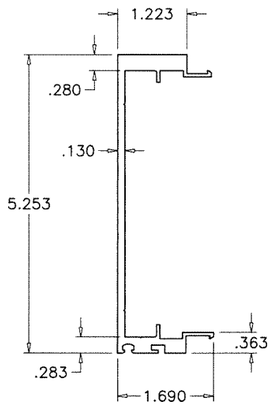

(9) MALE MULLION SSG

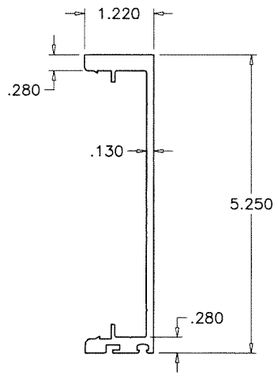

(10) FEMALE MULLION SSG

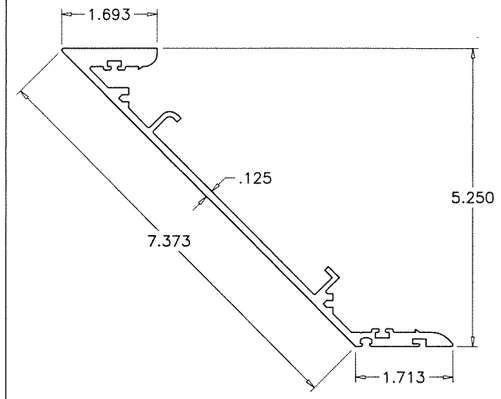

(8) FEMALE CORNER MULLION

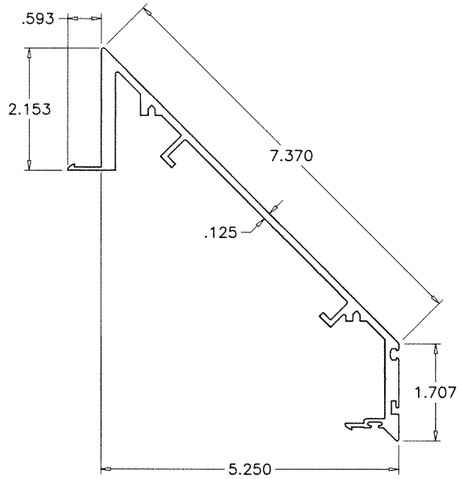

(7) MALE CORNER MULLION

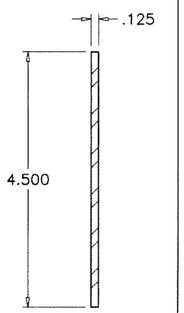

(23) REINF. BAR

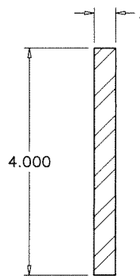

(24) 90° CORNER REINF. BAR

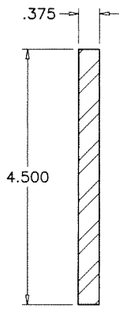

(25) REINF. BAR

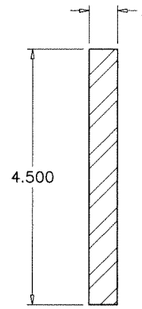

(26) REINF. BAR

Sealed: 10/23/2023

FL #27598

JALAL FAROOQ LICENSE No. 81223 STATE OF FLORIDA PROFESSIONAL ENGINEER

AL-FAROOQ CORPORATION
ENGINEERS & PRODUCT DEVELOPMENT
9360 SUNSET DRIVE, SUITE 220
MIAMI, FLORIDA 33173 (C.A.N. 3538)
TEL. (305) 264-8100 FAX. (305) 262-6978

COMP-ANL\18-32F-TG

SERIES-5250 ALUMINUM CURTAIN WALL SYSTEM (S.M.I.)

TECNOGLASS, LLC
3550 N.W. 49 STREET
MIAMI, FL. 33142
TEL. (305) 638-5151 FAX. (305) 638-5158

revisions:

no	date	by	description

date: 06-27-18
scale: 3/8" = 1"
dr. by: TARIQ
chk. by:

drawing no. 18-32F

sheet 21 of 23

ITEM NO.	PART NO.	QUANTITY	DESCRIPTION	MATERIAL	MANF./SUPPLIER/REMARKS
1	–	AS REQD.	HEAD / SILL	6063–T6	–
2	–	AS REQD.	HEAD / SILL COVER	6063–T6	–
3	–	AS REQD.	HORIZONTAL MULLION	6063–T6	–
4	–	AS REQD.	STRUCTURAL HORIZONTAL MULLION	6063–T6	–
5	–	AS REQD.	MALE MULLION	6063–T6	–
6	–	AS REQD.	FEMALE MULLION	6063–T6	–
7	–	AS REQD.	90° MALE CORNER MULLION	6063–T6	–
8	–	AS REQD.	90° FEMALE CORNER MULLION	6063–T6	–
9	–	AS REQD.	MALE MULLION	6063–T6	–
10	–	AS REQD.	FEMALE MULLION	6063–T6	–
11	–	AS REQD.	PRESSURE PLATE	6063–T6	–
12	–	AS REQD.	BEAUTY CAP	6063–T6	–
13	5250–203	AS REQD.	GLAZING ADAPTER	6063–T6	–
14	–	AS REQD.	90° GLAZING ADAPTER	6063–T6	–
15	5250–205	AS REQD.	STRUCTURAL GLAZING ADAPTER	6063–T6	–
16	–	AS REQD.	STRUCTURAL GLAZING SHELF	6063–T6	–
17	–	AS REQD.	GLASS SHELF SUPPORT	6063–T6	–
18	–	AS REQD.	PRESSURE PLATE EXTENDED CAP	6063–T6	–
19	–	AS REQD.	EXTENDED CAP	6063–T6	–
20	–	AS REQD.	STRUCTURAL EXTERIOR HEAD RECEPTOR (7 1/2")	6063–T6	–
21	–	AS REQD.	STRUCTURAL EXTERIOR HEAD RECEPTOR (6 7/8")	6063–T6	–
22	–	AS REQD.	BACK STRUCTURAL HEAD RECEPTOR	6063–T6	–
23	–	AS REQD.	1/8" X 4 1/2" FULL LENGTH REINFORCEMENT BAR (VERTICAL MULLION)	STEEL ASTM–A36	–
24	–	AS REQD.	3/8" X 4" FULL LENGTH REINFORCEMENT BAR (90 CORNER MULLION)	STEEL ASTM–A36	–
25	–	AS REQD.	3/8" X 4 1/2" FULL LENGTH REINFORCEMENT BAR (VERTICAL MULLION)	STEEL ASTM–A36	–
26	–	AS REQD.	1/2" X 4 1/2" FULL LENGTH REINFORCEMENT BAR (VERTICAL MULLION)	STEEL ASTM–A36	–
27	–	AS REQD.	STRUCTURAL GLAZING SHELF	6063–T6	–
28	–	AS REQD.	1" x 1" TUBE	6063–T6	–
29	–	AS REQD.	5/8" TUBE	6063–T6	–
30	–	AS REQD.	ANTI–BUCKLING CLIP (4" LONG EVERY 12" SPACING)	6063–T6	–
31	–	AS REQD.	MULLION SEAL GASKET	SILICONE	–
32	–	AS REQD.	INTERIOR GLASS SPACER	SILICONE	–
33	–	AS REQD.	BULB GASKET	SILICONE	–
34	–	AS REQD.	1/4" SLIDE–IN INTERIOR PRESSURE GASKET	SILICONE	–
35	–	AS REQD.	1 5/16" CW SPACER	POLYMIDE	–
36	–	AS REQD.	9/16" CW SPACER	POLYMIDE	–
37	–	AS REQD.	1/8" x 3/4" SETTING BLOCK	EPDM	–
38	–	AS REQD.	HIGH MODULUS TWO PART STRUCTURAL	SILICONE	–
41	–	AS REQD.	3/16" x 5/8" SETTING BLOCK	EPDM	–
41A	–	AS REQD.	1/8" x 5/8" SETTING BLOCK	EPDM	–
42	–	2/ LITE	3/16" x 1 7/16" SETTING BLOCK, AT 1/4 POINTS	EPDM	–
42A	–	2/ LITE	1/8" x 1 7/16" SETTING BLOCK, AT 1/4 POINTS	EPDM	–
43	–	2/ LITE	1/4" x 11/16" SETTING BLOCK, AT 1/4 POINTS	EPDM	–
43A	–	2/ LITE	1/4" x 1 1/2" SETTING BLOCK, AT 1/4 POINTS	EPDM	–
43B	–	2/ LITE	1/8" x 11/16" SETTING BLOCK, AT 1/4 POINTS	EPDM	–
44	–	AS REQD.	27/32" EDGE THERMAL ISOLATOR	PVC	–
45	–	AS REQD.	5" X 5" X 3/8" X 8" LG. ANGLE	STEEL ASTM–A36	–
46	–	AS REQD.	4" X 4" X 1/4" X 4 1/2" LG. FORMED ANGLE	STEEL ASTM–A36	–
47	–	AS REQD.	1/2" X 4 1/2" LG. THRU BOLT W/LOCK NUT & WASHER	SAE GRADE 5	–
47A	–	AS REQD.	5/8" X 4 1/2" LG. THRU BOLT W/LOCK NUT & WASHER	SAE GRADE 5	–
48	–	AS REQD.	1/4" – 14 X 1 1/2" LG. (AT VERTICAL & HORIZONTAL MULLION)	SAE GRADE 5	–
49	–	AS REQD.	#12 X 1" PHILLIPS PAN HEAD SHEET METAL SCREW	STAINLESS STEEL	–
52	–	AS REQD.	3/4" Ø HH POWER EDGE BOLT	SAE GRADE 5	–
53	–	AS REQD.	1/4" FILLET, 4" LONG TOP & BOTTOM	MILD STEEL E70	–
54	–	AS REQD.	#10 X 3/4" LG S,S S.S	STAINLESS STEEL	–
55	–	AS REQD.	1/4" X 1 1/2" X 1 1/2" WELD WASHER	MILD STEEL E70	–
56	–	AS REQD.	5" X 3" X 1/4" X 8" LG. ANGLE	STEEL ASTM–A36	–
57	–	AS REQD.	1/4" FILLET, 1 1/2" LONG TOP & BOTTOM	MILD STEEL E70	–
58	–	AS REQD.	1 5/16" X 2 1/16 HALFEN ANCHOR	STEEL ASTM–A36	–
59	–	AS REQD.	SPACER GASKET	SILICONE	–
60	–	AS REQD.	1/4 – 14 X 2" LG HEX WASHER HEAD	STAINLESS STEEL	–
61	–	AS REQD.	1/4 – 14 X 2" LG FLAT HEAD (AT 90° CORNER MULLION)	STAINLESS STEEL	–
67	–	AS REQD.	ZONE PLUG	EPDM	–
69	–	AS REQD.	#12 X 1 3/4" PHILLIPS PAN HEAD SHEET METAL SCREW	STAINLESS STEEL	–

Sealed: 10/23/2023

JALAL FAROOQ LICENSE No. 81223 STATE OF FLORIDA PROFESSIONAL ENGINEER

FL #27598

AL-FAROOQ CORPORATION
ENGINEERS & PRODUCT DEVELOPMENT
9360 SUNSET DRIVE, SUITE 220
MIAMI, FLORIDA 33173 *(C.A.N. 3538)*
TEL. (305) 264-8100 FAX. (305) 262-6978

COMP–ANL\18–32F–TG

SERIES–5250 ALUMINUM CURTAIN WALL SYSTEM (S.M.I.)

TECNOGLASS, LLC
3550 N.W. 49 STREET
MIAMI, FL. 33142
TEL. (305) 638–5151
FAX. (305) 638–5158

revisions:

no	date	by	description

date: 06–27–18
scale: 3/8" = 1"
dr. by: TARIQ
chk. by:

drawing no. 18–32F

sheet 22 of 23

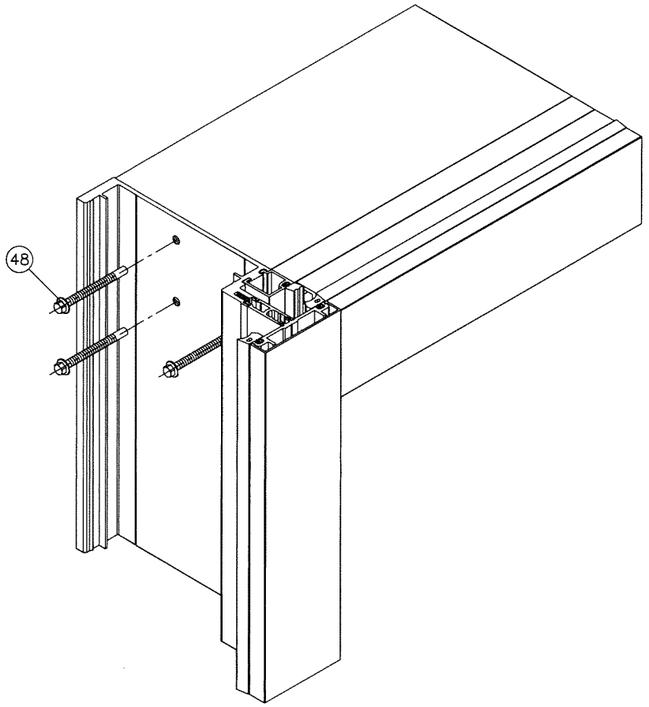

FRAME TOP CORNER

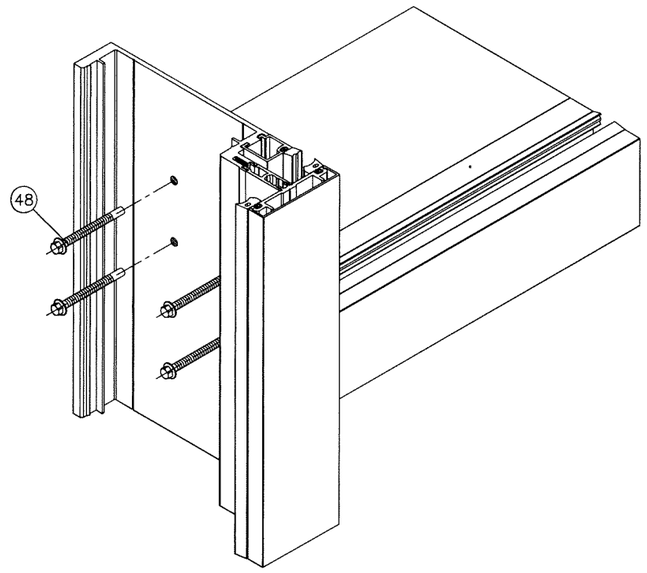

FRAME HORIZONTAL CORNER

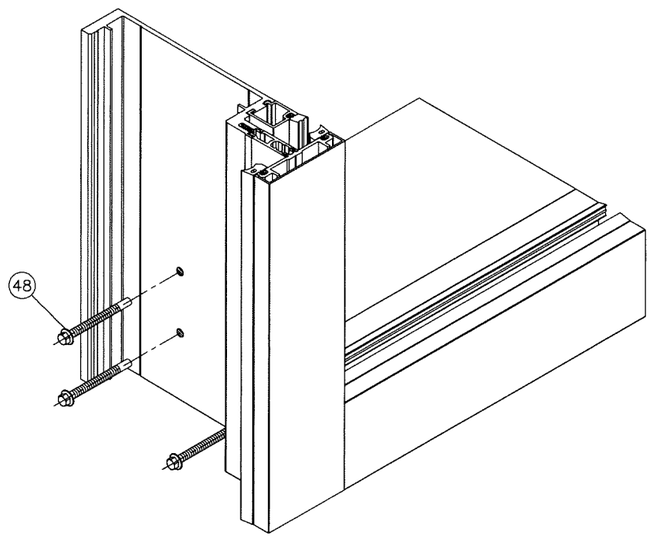

FRAME BOTTOM CORNER

Sealed: 10/23/2023

JALAL FAROOQ LICENSE No. 81223 STATE OF FLORIDA PROFESSIONAL ENGINEER

FL #27598

AL-FAROOQ CORPORATION
ENGINEERS & PRODUCT DEVELOPMENT
9360 SUNSET DRIVE, SUITE 220
MIAMI, FLORIDA 33173 (C.A.N. 3538)
TEL. (305) 264-8100 FAX. (305) 262-6978

COMP-ANL\18-32F-TG

SERIES-5250 ALUMINUM CURTAIN WALL SYSTEM (S.M.I.)

TECNOGLASS, LLC
3550 N.W. 49 STREET
MIAMI, FL. 33142
TEL. (305) 638-5151 FAX. (305) 638-5158

revisions:			
no	date	by	description

date: 06-27-18
scale: 3/8" = 1"
dr. by: TARIQ
chk. by:

drawing no. 18-32F