MIAMI-DADE COUNTY

DEPARTMENT OF REGULATORY AND ECONOMIC RESOURCES (RER)

BOARD AND CODE ADMINISTRATION DIVISION

MIAMI–DADE COUNTY, FLORIDA
PRODUCT CONTROL SECTION
11805 SW 26 Street, Room 208
Miami, FL 33175-2474
T (786) 315–2590 F (786) 315–2599
www.miamidade.gov/economy

NOTICE OF ACCEPTANCE (NOA)

PGT Industries, LLC
3400 Precision Drive,
North Venice, Fl. 34275

SCOPE:

This NOA is being issued under the applicable rules and regulations governing the use of construction materials. The documentation submitted has been reviewed and accepted by Miami–Dade County RER–Product Control Section to be used in Miami–Dade County and other areas where allowed by the Authority Having Jurisdiction (AHJ).

This NOA shall not be valid after the expiration date stated below. The Miami–Dade County Product Control Section (In Miami–Dade County) and/ or the AHJ (in areas other than Miami–Dade County) reserve the right to have this product or material tested for quality assurance purposes. If this product or material fails to perform in the accepted manner, the manufacturer will incur the expense of such testing and the AHJ may immediately revoke, modify, or suspend the use of such product or material within their jurisdiction. RER reserves the right to revoke this acceptance, if it is determined by Miami–Dade County Product Control Section that this product or material fails to meet the requirements of the applicable building code.

This product is approved as described herein and has been designed to comply with the Florida Building Code, including the High Velocity Hurricane Zone.

DESCRIPTION: Series "FD–650" Outswing Aluminum French Door w/wo Sidelites – N.I.

APPROVAL DOCUMENT: Drawing No. **8000–12 Rev I**, titled "Alum. French Door & Side Lites, Non–Impact", sheets 1 through 11 of 11, dated 12/23/04 and last revised on 12/18/2024, prepared by manufacturer, signed and sealed by Anthony Lynn Miller, P. E., bearing the Miami–Dade County Product Control Section Renewal stamp with the Notice of Acceptance number and Expiration date by the Miami–Dade County Product Control Section.

MISSILE IMPACT RATING: None: Approved Hurricane Protection devices, complying w/ FBC, as applicable are required.

Limitations:

1. See sheet **2** for Design Pressures (DP) VS sizes and glass types for doors and sidelites (Narrow or full jambs) and overhang /sill options. When doors are assembled with sidelites, lower design pressures from door or sidelite shall control.
2. See glass options in sheet **1** and spacer options for insulated glass in sheet **8**.
3. See installation anchoring details in sheets **9, 10** and **11.**

LABELING: Each unit shall bear a permanent label with the manufacturer's name or logo, city, state, series, and following statement: "Miami–Dade County Product Control Approved", unless otherwise noted herein.

RENEWAL of this NOA shall be considered after a renewal application has been filed and there has been no change in the applicable building code negatively affecting the performance of this product.

TERMINATION of this NOA will occur after the expiration date or if there has been a revision or change in the materials, use, and/ or manufacture of the product or process. Misuse of this NOA as an endorsement of any product, for sales, advertising or any other purposes shall automatically terminate this NOA. Failure to comply with any section of this NOA shall be cause for termination and removal of NOA.

ADVERTISEMENT: The NOA number preceded by the words Miami–Dade County, Florida, and followed by the expiration date may be displayed in advertising literature. If any portion of the NOA is displayed, then it shall be done in its entirety.

INSPECTION: A copy of this entire NOA shall be provided to the user by the manufacturer or its distributors and shall be available for inspection at the job site at the request of the Building Official.

This NOA **revises & renews NOA No. 23-0724.05** and consists of this page 1 and evidence pages E–1, E–2, and E-3 as well as approval document mentioned above.

The submitted documentation was reviewed by **Ishaq I. Chanda, P. E.** Ishaq I. Chanda

MIAMI-DADE COUNTY APPROVED

PGT Industries, LLC

NOTICE OF ACCEPTANCE: EVIDENCE SUBMITTED

1. Evidence submitted under previous approvals

A. DRAWINGS

1. Manufacturer's die drawings and sections.

2. Drawing No. **8000–12 Rev G**, titled "Alum. French Door & Side Lites, Non–Impact", sheets 1 through 11 of 11, dated 12/23/04 and last revised on 04/20/20, prepared by manufacturer, signed and sealed by Anthony Lynn Miller, P. E.

B. TESTS

1. Test reports on: 1) Air Infiltration Test, per FBC, TAS 202–94
2) Uniform Static Air Pressure Test, Loading per FBC, TAS 202–94
3) Water Resistance Test, per FBC, TAS 202–94
4) Forced Entry Test, per FBC 2411.3.2.1, and TAS 202–94

along with marked–up drawings and installation diagram of an aluminum doors of OXXO configuration, prepared by Fenestration Testing Laboratory, Inc., Test Report No. **FTL–5967**, dated 05/07/09, signed and sealed by Julio E. Gonzalez, P. E.
(Submitted under previous NOA No. 09–1028.09)

2. Test reports on: 1) Air Infiltration Test, per FBC, TAS 202–94
2) Uniform Static Air Pressure Test, Loading per FBC, TAS 202–94
3) Water Resistance Test, per FBC, TAS 202–94
4) Large Missile Impact Test per FBC, TAS 201–94
5) Cyclic Wind Pressure Loading per FBC, TAS 203–94
6) Forced Entry Test, per FBC 2411.3.2.1, and TAS 202–94

along with marked–up drawings and installation diagram of an aluminum doors of OXXO configuration, prepared by Fenestration Testing Laboratory, Inc., Test Report No. **FTL–4921,** dated 07/17/06, signed and sealed by Edmundo J. Largaespada, P. E.
(Submitted under previous NOA No. 05–0107.01)

3. Test reports on: 1) Air Infiltration Test, per FBC, TAS 202–94
5) Uniform Static Air Pressure Test, Loading per FBC, TAS 202–94
6) Water Resistance Test, per FBC, TAS 202–94
7) Forced Entry Test, per FBC 2411.3.2.1, and TAS 202–94

along with marked–up drawings and installation diagram of an aluminum doors of OXXO configuration, prepared by Fenestration Testing Laboratory, Inc., Test Reports No.'s **FTL–4450,** dated 12/14/04, **FTL–4451,** dated 12/14/04 and **FTL–4452,** dated 12/14/04, all signed and sealed by Edmundo J. Largaespada, P. E. ***(Submitted under previous NOA No. 05–0107.01).***

4. Reference Test report on 1) Uniform Static Air Pressure Test, per FBC, TAS 202-94
2) Large Missile Impact Test per FBC, TAS 201-94
3) Cyclic Wind Pressure Loading per FBC, TAS 203-94

Along with marked-up drawings and installation diagram of Aluminum Sliding Glass Doors (w/ PS, Super, Cardinal & Duraseal Spacers), prepared by Fenestration Testing Laboratory, Inc., Test Reports No(s) **FTL-8717, FTL-8970** and **FTL-8968**, dated 02/15/16, 06/07/16 and 06/20/16, all signed & sealed by Idalmis Ortega, P.E.(***Submitted under previous NOA No. 16-0629.15)***

Ishaq I. Chanda

Ishaq I. Chanda, P. E.
Product Control Unit Supervisor
NOA No. 24-1219.11
Expiration Date: March 24, 2030
Approval Date: January 16, 2025

B. TESTS (CONTUNUED)

5. Test reports on:
1) Air Infiltration Test, per FBC, TAS 202–94
2) Uniform Static Air Pressure Test, Loading per FBC, TAS 202–94
3) Water Resistance Test, per FBC, TAS 202–94
4) Large Missile Impact Test per FBC, TAS 201–94
5) Cyclic Wind Pressure Loading per FBC, TAS 203–94
6) Forced Entry Test, per ASTM F588 and TAS 202-94

along with marked-up drawings and installation diagram of all PGT Industries, Inc., representative units listed below and tested to qualify **Dowsil 791** and **Dowsil 983** silicones, per Proposal #**19-1155TP**, prepared by Fenestration Testing Laboratory, Inc., Test Reports No.: **PGT Industries, Inc. test specimens: FTL-7897,** PGT PW5520 PVC Fixed Window (unit 6 in proposal), dated 09/03/14, **FTL-20-2107.1,** PGT SGD780 Aluminum Sliding Glass Door (unit 7 in proposal) **FTL-20-2107.2,** PGT CA740 Alum. Outswing Casement Window (unit 8 in proposal) **FTL-20-2107.3,** PGT PW7620A Aluminum Fixed Window (unit 9 in proposal) and **FTL-20-2107.4**, PGT PW7620A Aluminum Fixed Window (unit 10 in proposal) all dated 07/13/20 and signed and sealed by Idalmis Ortega, P.E.
(*Submitted under previous NOA No. 20-0427.04)*

C. CALCULATIONS

1. Anchor verification calculations and structural analysis, complying with **FBC 2010 and FBC 2014, 5th Edition**, prepared by manufacturer, dated 02/11/15, signed and sealed by A. Lynn Miller, P. E.

2. Anchor verification calculations and structural analysis, complying with **FBC 5th Edition (2014)** and **FBC 6th Edition (2017)**, prepared by manufacturer, dated 11/22/17, signed and sealed by A. Lynn Miller, P. E.

3. Anchor verification calculations and structural analysis, complying with **FBC 2020, 7th Edition**, prepared by manufacturer, dated 04/20/20, signed and sealed by A. Lynn Miller, P. E.

4. Glazing complies with ASTM E1300–04, -09, -12 and-16.

D. QUALITY ASSURANCE

1. Miami–Dade Department of Regulatory and Economic Resources (RER.

E. MATERIAL CERTIFICATIONS

1. None.

F. STATEMENTS

1. Statement letter of conformance with **FBC 5th Edition (2014)** and **FBC 6th Edition (2017),** issued by manufacturer, dated 08/16/17, signed and sealed by A. Lynn Miller, P. E.

2. Statement letter of conformance to **FBC–2010** and complying with **FBC 5th Edition (2014)**, issued by manufacturer, dated 11/06/14, signed and sealed by A. Lynn Miller, P. E.

3. Statement letter of conformance to **FBC 2017 (6th Edition)** and **FBC 2020 (7th Edition)**, issued by manufacturer, dated 11/22/19, signed and sealed by Lynn Miller, P. E.

4. Statement letter of no financial interest, issued by manufacturer, dated 11/22/19, signed and sealed by A. Lynn Miller, P. E.

Ishaq I. Chanda

Ishaq I. Chanda, P. E.
Product Control Unit Supervisor
NOA No. 24-1219.11
Expiration Date: March 24, 2030
Approval Date: January 16, 2025

F. STATEMENTS (continued)

5. Department of State Certification of **PGT INDUSTRIES, INC.** as a for profit corporation, active and organized under the laws of the State of Florida, dated 01/27/15 and filed by Ken Detzner, Secretary of State.

6. Notification of Successor Engineer for manufacturer's NOA document per **Section 61G15–27.001** of the **Florida Administrative Code**, notifying original engineer that the successor engineer is assuming full professional and legal responsibility for all engineering documents pertaining to this NOA, dated 10/07/11, signed and sealed by A. Lynn Miller, P. E.

G. OTHERS

1. Proposal No.**08–1891** issued by Product Control, dated 01/26/09, signed by Ishaq Chanda, P. E. ***(Submitted under previous NOA No. 09–1028.09).***

2. Test proposal No. **16-0152** dated 03/09/16 approved by RER.

3. RER Test proposal # **19-1155,** dated 01/10/20 approved by Ishaq I. Chanda, P.E.

2. Evidence submitted under previous submittal

A. DRAWINGS

1. Drawing No. **8000–12 Rev H**, titled "Alum. French Door & Side Lites, Non–Impact", sheets 1 through 11 of 11, dated 12/23/04 and last revised on 07/19/2023, prepared by manufacturer, signed and sealed by Anthony Lynn Miller, P. E.

B. TESTS

1. None.

C. CALCULATIONS

1. None.

D. QUALITY ASSURANCE

1. Miami Dade Department of Regulatory and Economic Resources (RER).

E. MATERIAL CERTIFICATIONS

1. None.

F. STATEMENTS

1. Statement letter of conformance to **FBC 2020 (7th Edition)** and **FBC 2023 (8th Edition)**, issued by manufacturer, dated 07/20/2023, signed and sealed by Lynn Miller, P. E.

2. Statement letter of no financial interest, issued by manufacturer, dated 07/20/2023, signed and sealed by A. Lynn Miller, P. E.

G. OTHER

1. This NOA **revises NOA # 20-0427.04,** expiring 03/24/25. Ishaq I. Chanda

Ishaq I. Chanda, P. E.
Product Control Unit Supervisor
NOA No. 24-1219.11
Expiration Date: March 24, 2030
Approval Date: January 16, 2025

NOTICE OF ACCEPTANCE: EVIDENCE SUBMITTED

3. NEW EVIDENCE SUBMITTED

A. DRAWINGS

1. Drawing No. **8000–12 Rev I**, titled "Alum. French Door & Side Lites, Non–Impact", sheets 1 through 11 of 11, dated 12/23/04 and last revised on 12/18/2024, prepared by manufacturer, signed and sealed by Anthony Lynn Miller, P. E.

B. TESTS

1. None.

C. CALCULATIONS

1. None.

D. QUALITY ASSURANCE

1. Miami-Dade Department of Regulatory and Economic Resources (RER).

E. MATERIAL CERTIFICATIONS

1. None.

F. STATEMENTS

1. Statement letter of conformance, complying with **FBC 8th Edition (2023)**, and statement letter of no financial interest, dated 12/18/24, signed and sealed by Anthony Lynn Miller, P.E.

2. Statement letter dated 12/18/24 issued by manufacturer requesting renewal with company name change to PGT industries, LLC, signed and sealed by Anthony Lynn Miller, P.E.

3. e-mail dated 12/23/24 sent by Lynn Miller (PGT Code Compliance Manager), consists of PGT innovation form 8-k filed w/SEC, PGT innovation form 10-K filled w/SEC and Exhibit 21(Form 10-K); PGT innovation's list of subsidiaries.

G. OTHERS

1. Article of conversion of PGT Industries, Inc to PGT industries, LLC pdf provided on 12/24/24 by Ms. April Lee, Assistant General Counsel.

2. Florida Department of State, Division of Corporation listing # L2400142070 of PGT Industries, LLC as active status since 12/17/24.

3. Florida Department of State, Division of Corporation listing # F03387 of PGT Industries, Inc as Inactive status.

4. PGT Name change organization chart layout prepared by RER (for file use only).

5. This NOA **revises & renews NOA No.** ***23-0724.05*** **(**PGT Industries, Inc.**),** expires on 03/24/30.

Ishaq I. Chanda

Ishaq I. Chanda, P. E.
Product Control Unit Supervisor
NOA No. 24-1219.11
Expiration Date: March 24, 2030
Approval Date: January 16, 2025

SERIES 650 OUTSWING NON-IMPACT RESISTANT FRENCH DOOR AND SIDE LITE

DESIGN PRESSURE RATING	IMPACT RATING
SEE TABLES 1, 2 & 3 ON SHEET 2	NOT RATED FOR MISSILE IMPACT RESISTANCE

1. GLAZING OPTIONS:
   A. 3/16" TEMPERED GLASS
   B. 7/8" I.G. GLASS CONSISTING OF (2) LITES OF 3/16" TEMPERED GLASS WITH A 1/2" AIR SPACE.

2. DESIGN PRESSURES: (SEE TABLES 1, 2 AND 3, SHEET 2)
   A. NEGATIVE DESIGN LOADS BASED ON TESTED PRESSURE AND GLASS TABLES ASTM E 1300.
   B. POSITIVE DESIGN LOADS BASED ON WATER TEST PRESSURE AND GLASS TABLES ASTM E 1300.
   C. DESIGN LOADS ARE BASED ON ALLOWABLE STRESS DESIGN, ASD.

3. CONFIGURATIONS: X, O, XX, XO, OX, XXX, XXO, OXX, OXO, XXXX, XXXO, OXXX, OR OXXO WHERE O REPRESENTS EITHER THE NARROW JAMB OR FULL JAMB SIDE LITE. ANY TWO ADJACENT X UNITS CAN BE EITHER TWO SINGLE X DOORS OR A DOUBLE XX DOOR, BOTH USING EITHER THE STANDARD OR THE LOW-RISE SILL. THE FRENCH DOOR ASSEMBLY BEAM IS USED TO ASSEMBLE X, XX, AND XO UNITS TO MAKE THE ABOVE CONFIGURATIONS.

4. ANCHORAGE: THE 33 1/3% STRESS INCREASE HAS NOT BEEN USED IN THE DESIGN OF THIS PRODUCT. FOR ANCHORAGE REQUIREMENTS SEE SHEETS 9 THROUGH 11.

5. SHUTTERS ARE REQUIRED WHERE IMPACT RESISTANCE REQUIRED. SHUTTERS MUST BE MIAMI-DADE COUNTY APPROVED FOR INSTALLATION IN MIAMI-DADE COUNTY.

6. SEALANTS: INSTALLATION SCREWS, FRAME AND PANEL CORNERS SEALED WITH CLEAR COLORED SEALANT. VERTICAL ASSEMBLY BEAM SEAM-SEALED ON THE INTERIOR AND EXTERIOR WITH CONTRACTOR'S SEALANT.

7. REFERENCES: TEST REPORTS FTL-4450, FTL-4451, FTL-4452, FTL-4921 AND FTL-5967.
   ANSI/AF&PA NDS FOR WOOD CONSTRUCTION
   ADM ALUMINUM DESIGN MANUAL

8. THIS PRODUCT HAS BEEN DESIGNED & TESTED TO COMPLY WITH THE REQUIREMENTS OF THE FLORIDA BUILDING CODE, INCLUDING THE HIGH VELOCITY HURRICANE ZONE (HVHZ).

Material	Min. F_y	Min. F_u
Steel Screw	92 ksi	120 ksi
18-8 Screw	60 ksi	95 ksi
410 Screw	90 ksi	110 ksi
Elco UltraCon®	155 ksi	177 ksi
1/4" DeWalt UltraCon+®	148 ksi	164 ksi
410 SS Elco/Dewalt CreteFlex®	127.4 ksi	189.7 ksi
6063-T5 Aluminum	16 ksi	22 ksi
A36 Steel	36 ksi	58 ksi
Gr. 33 Steel Stud	33 ksi	45 ksi

TABLE A:

Anchor Group	Anchor Type	Frame Member	Substrate	Min. Edge Distance	Min. Embedment or Metal Thickness
A	#12 SMS (steel, 18-8 S.S. or 410 S.S.)	All	Southern Pine (SG = 0.55)	9/16"	1-3/8"
		All	6063-T5 Aluminum	3/8"	1/8"
		All	Steel, A36	3/8"	0.060"
		All	Steel Stud, A1003 Gr. 33	3/8"	0.0451" (18 Ga.)
B	1/4" DeWalt UltraCon+®	All	Concrete (min. 3 ksi)	2"	1-3/4"
		Jamb	Hollow Block (ASTM C90)	2"	1-1/4"
C	1/4" 410 SS Elco/DeWalt CreteFlex®	All	Concrete (min. 3.35 ksi)	1-3/4"	1-3/4"
		Jamb	Hollow Block (ASTM C90)	1-3/4"	1-1/4"
		All	Southern Pine (SG = 0.55)	1"	1-3/8"

1) WHERE SUBSTRATE CONDITIONS REQUIRE ANCHORAGE FROM MORE THAN ONE OF THE ANCHOR GROUPS ABOVE, CHOOSE THE ANCHOR GROUP OF THE LOWEST LETTER FOR ALL TABLES IN THIS APPROVAL.
2) ALL ANCHOR HEAD TYPES ARE APPLICABLE.
3) MIN. OF 3 THREADS BEYOND METAL SUBSTRATE.
4) ALL ANCHOR HEAD TYPES ACCEPTABLE.

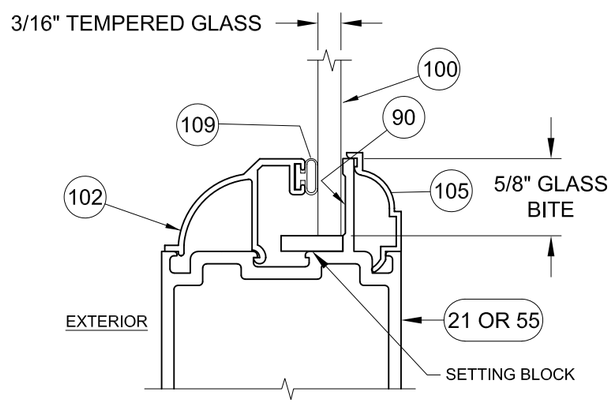

GLAZING DETAIL
MONOLITHIC GLASS

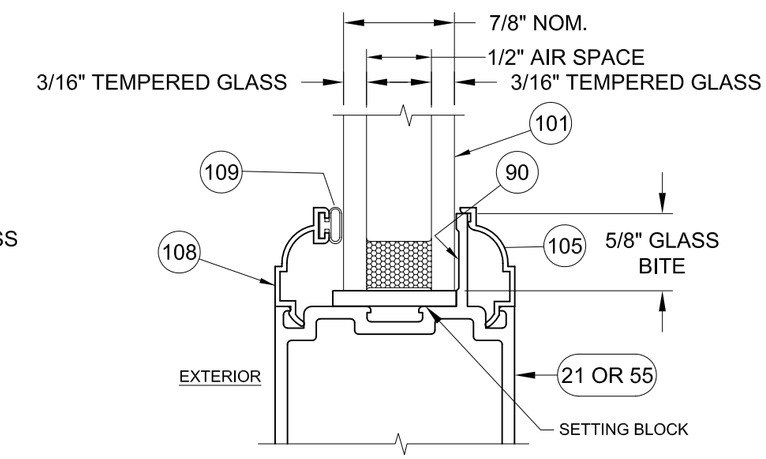

GLAZING DETAIL
I.G. GLASS

GENERAL NOTES..... 1
CONFIGURATIONS..... 1
GLAZING DETAILS..... 1
DESIGN PRESSURES..... 2
ELEVATIONS..... 3
VERT. SECTIONS..... 4
HORIZ. SECTIONS..... 5
PARTS LIST..... 6
EXTRUSIONS..... 7-8
ANCHORAGE..... 9-11

CODES / STANDARDS USED:

- 2023 FLORIDA BUILDING CODE (FBC), 8TH EDITION
- ASTM E1300-09
- ANSI/AF&PA NDS-2018 FOR WOOD CONSTRUCTION
- ALUMINUM DESIGN MANUAL, ADM-2020
- AISI S100-16
- AISC 360-16

PRODUCT RENEWED
as complying with the Florida Building Code
NOA-No. 24-1219.11
Expiration Date 03/24/2030
By Ishaq I. Chanda
Miami-Dade Product Control

Revision: REVISED CO. ADDRESS JR - 12/18/24

PREPARED BY A. LYNN MILLER
1070 TECHNOLOGY DRIVE
N. VENICE, FL 34275
(941) 480-1600
REGISTRATION #29296

PGT Custom Windows and Doors
3400 PRECISION DRIVE
N. VENICE, FL 34275
(941) 480-1600

Series	Desc.	Sheet	DWG No.	Rev.
FD650	GENERAL NOTES & GLAZING DETAILS	1 OF 11	8000-12	1

Title: ALUM. FRENCH DOOR & SIDE LITES (NI)
Drawn By: JENS ROSOWSKI
Date: 12/23/04

ANTHONY LYNN MILLER
LICENSE
No. 58705
A. Lynn Miller
12/18/24
STATE OF FLORIDA
PROFESSIONAL ENGINEER
A. LYNN MILLER, P.E.
P.E.# 58705

TABLE 1. COMPARATIVE ANALYSIS: OUTSWING DOORS

GLASS A. 3/16" TEMPERED GLASS

OPTIONS: B. 7/8" I.G. (3/16"T, AIR SPACE, 3/16"T)

CONFIG.	DOOR WIDTH	DOOR HEIGHT				
		6^{8} - 79 3/4"	7^{0} - 83 3/4"	87 3/4"	91 3/4"	8^{0} - 95 3/4"
X	2^{0} 25"	+100.0 -145.0	+100.0 -145.0	+100.0 -145.0	+100.0 -145.0	+100.0 -139.5
X	27"	+100.0 -145.0	+100.0 -145.0	+100.0 -144.2	+100.0 -136.9	+100.0 -130.3
X	29"	+100.0 -145.0	+100.0 -143.4	+100.0 -135.7	+100.0 -128.7	+100.0 -122.4
X	2^{6} 31"	+100.0 -144.2	+100.0 -135.8	+100.0 -128.3	+100.0 -121.6	+100.0 -115.6
X	2^{8} 33"	+100.0 -126.7	+100.0 -126.7	+100.0 -122.0	+100.0 -115.5	+100.0 -109.7
X	35"	+100.0 -112.2	+100.0 -112.2	+100.0 -112.2	+100.0 -110.2	+100.0 -104.6
X	3^{0} 37"	+100.0 -100.0	+100.0 -100.0	+100.0 -100.0	+100.0 -100.0	+100.0 -100.0
XX	4^{0} 47 3/4"	+100.0 -145.0	+100.0 -145.0	+100.0 -145.0	+100.0 -145.0	+100.0 -139.5
XX	51 3/4"	+100.0 -145.0	+100.0 -145.0	+100.0 -144.2	+100.0 -136.9	+100.0 -130.3
XX	55 3/4"	+100.0 -145.0	+100.0 -143.4	+100.0 -135.7	+100.0 -128.7	+100.0 -122.4
XX	5^{0} 59 3/4"	+100.0 -144.2	+100.0 -135.8	+100.0 -128.3	+100.0 -121.6	+100.0 -115.6
XX	5^{4} 63 3/4"	+100.0 -126.7	+100.0 -126.7	+100.0 -122.0	+100.0 -115.5	+100.0 -109.7
XX	67 3/4"	+100.0 -112.2	+100.0 -112.2	+100.0 -112.2	+100.0 -110.2	+100.0 -104.6
XX	6^{0} 71 3/4"	+100.0 -100.0	+100.0 -100.0	+100.0 -100.0	+100.0 -100.0	+100.0 -100.0

TABLE 2. COMPARATIVE ANALYSIS: FULL JAMB SIDE LITE

GLASS A. 3/16" TEMPERED GLASS

OPTIONS: B. 7/8" I.G. (3/16"T, AIR SPACE, 3/16"T)

SIDE LITE WIDTH	SIDE LITE HEIGHT				
	6^{8} - 79 3/4"	7^{0} - 83 3/4"	87 3/4"	91 3/4"	8^{0} - 95 3/4"
21 11/16"	+100.0 -145.0	+100.0 -145.0	+100.0 -145.0	+100.0 -145.0	+100.0 -145.0
24 11/16"	+100.0 -145.0	+100.0 -145.0	+100.0 -145.0	+100.0 -144.9	+100.0 -137.9
30 11/16"	+100.0 -142.9	+100.0 -135.3	+100.0 -127.8	+100.0 -121.1	+100.0 -115.1
33 11/16"	+100.0 -118.6	+100.0 -118.6	+100.0 -118.6	+100.0 -112.5	+100.0 -106.8
36 11/16"	+100.0 -100.0	+100.0 -100.0	+100.0 -100.0	+100.0 -100.0	+100.0 -100.0

NOTE: REFERENCE TEST REPORTS FTL4450, FTL-4451, FTL-4452, FTL-4921 AND FTL 5967.

TABLE 3. COMPARATIVE ANALYSIS: NARROW JAMB SIDE LITE

GLASS A. TEMPERED GLASS

OPTIONS: B. 7/8" I.G. (3/16"T, AIR SPACE, 3/16"T)

SIDE LITE WIDTH	SIDE LITE HEIGHT				
	6^{8} - 79 3/4"	7^{0} - 83 3/4"	87 3/4"	91 3/4"	8^{0} - 95 3/4"
10 11/16"	+100.0 -145.0	+100.0 -145.0	+100.0 -145.0	+100.0 -145.0	+100.0 -145.0
13 11/16"	+100.0 -145.0	+100.0 -145.0	+100.0 -145.0	+100.0 -145.0	+100.0 -145.0
16 11/16"	+100.0 -145.0	+100.0 -145.0	+100.0 -145.0	+100.0 -145.0	+100.0 -145.0
19 11/16"	+100.0 -145.0	+100.0 -145.0	+100.0 -145.0	+100.0 -145.0	+100.0 -145.0
21 11/16"	+100.0 -145.0	+100.0 -145.0	+100.0 -145.0	+100.0 -145.0	+100.0 -145.0
24 11/16"	+100.0 -145.0	+100.0 -145.0	+100.0 -145.0	+100.0 -144.9	+100.0 -137.9
30 11/16"	+100.0 -142.9	+100.0 -135.3	+100.0 -127.8	+100.0 -121.1	+100.0 -115.1
33 11/16"	+100.0 -118.6	+100.0 -118.6	+100.0 -118.6	+100.0 -112.5	+100.0 -106.8
36 11/16"	+100.0 -100.0	+100.0 -100.0	+100.0 -100.0	+100.0 -100.0	+100.0 -100.0

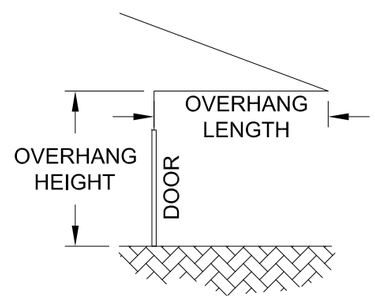

NOTES:
1. IF USING THE OPTIONAL LOW-RISE SILL (PART 10, SHEET 7 OF 11), THE OVERHANG LENGTH MUST BE GREATER THAN OR EQUAL TO THE OVERHANG HEIGHT (SEE DIAGRAM). IF NOT, THE MAXIMUM POSITIVE (+) DESIGN PRESSURE IS LIMITED TO +50.0 PSF FOR ALL STYLES AND SIZES OF THE DOOR AND ANY ADJOINING SIDELITES.
2. FOR COMBINED UNITS, THE LOWEST DESIGN PRESSURE OF THE SIDELITE AND THE DOOR GOVERNS THE OVERALL ASSEMBLY DESIGN PRESSURE.

PRODUCT RENEWED
as complying with the Florida Building Code
NOA-No. 24-1219.11
Expiration Date 03/24/2030
By Ishaq I. Chanda
Miami-Dade Product Control

Revision: REVISED CO. ADDRESS JR - 12/18/24

PREPARED BY A. LYNN MILLER
1070 TECHNOLOGY DRIVE
N. VENICE, FL 34275
(941) 480-1600
REGISTRATION #29296

PGT Custom Windows and Doors
3400 PRECISION DRIVE
N. VENICE, FL 34275
(941) 480-1600

Title:	ALUM. FRENCH DOOR & SIDE LITES (NI)	Date	12/23/04	Rev.	1
Desc.:	DESIGN PRESSURES	Drawn By	JENS ROSOWSKI	DWG No.	8000-12
Series	FD650	Sheet	2 OF 11		

ANTHONY LYNN MILLER
LICENSE
No. 58705
A. Lynn Miller
12/18/24
STATE OF FLORIDA
PROFESSIONAL ENGINEER
A. LYNN MILLER, P.E.
P.E.# 58705

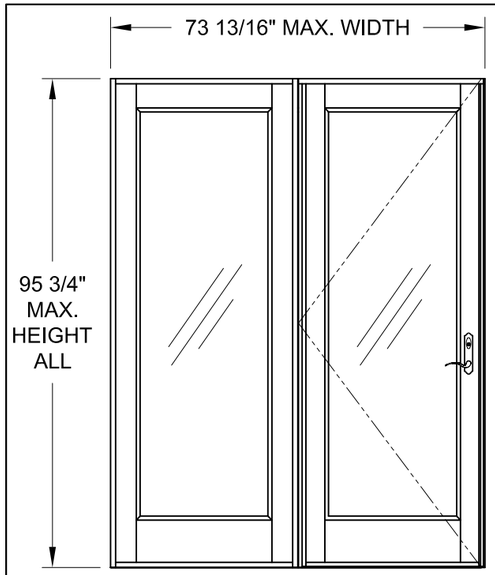

OX OR XO

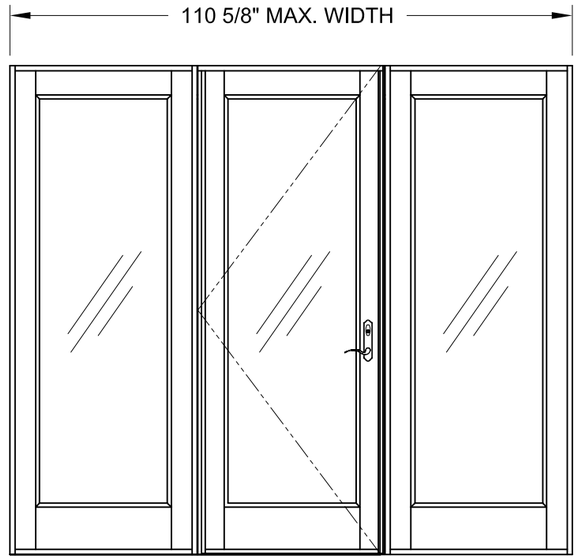

OXO

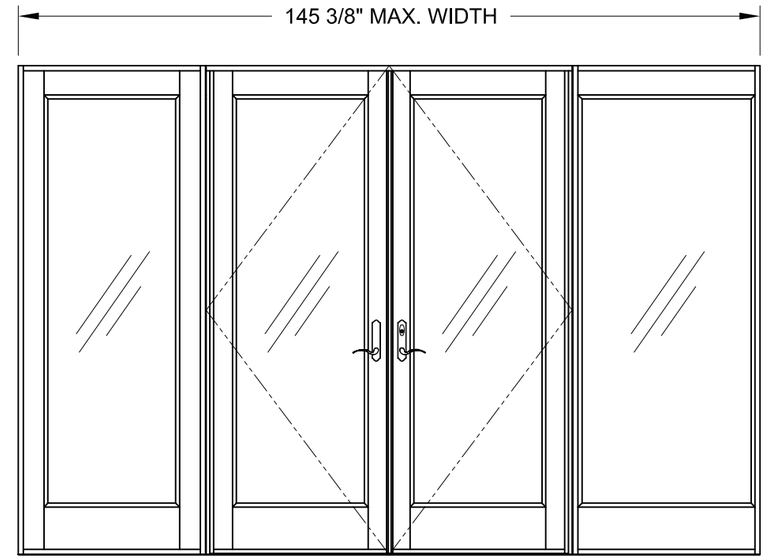

OXXO (SHOWING EACH VERSION SIDELITE)

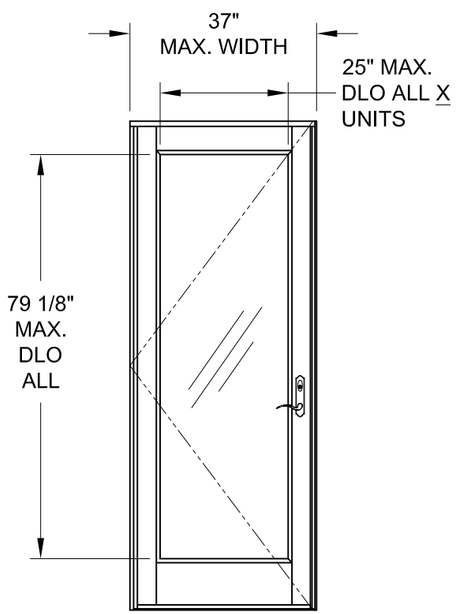

X

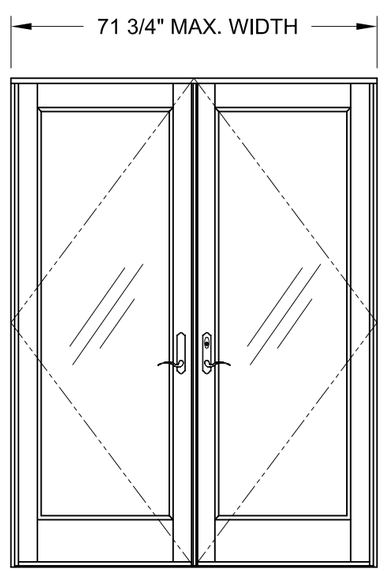

XX

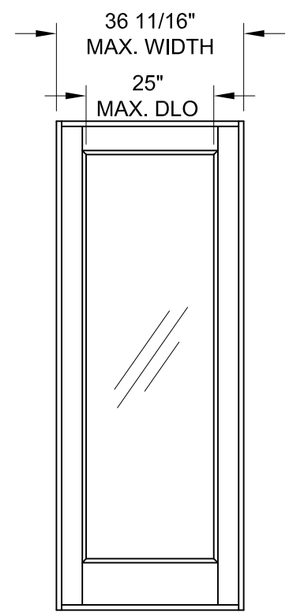

O (FULL JAMB)

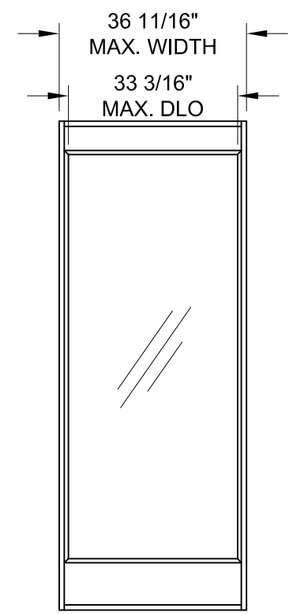

O (NARROW JAMB)

NOTES:
1. CONFIGURATIONS WITH SIDE LITES CAN BE EITHER NARROW JAMB OR FULL JAMB VERSIONS.
2. FOR ANCHOR SPACING AND DETAILS, SEE SHEETS 9 THROUGH 11.
3. FOR VERTICAL SECTIONS SEE SHEET 4 AND FOR HORIZONTAL SECTIONS SEE SHEET 5.

PRODUCT RENEWED
as complying with the Florida Building Code
NOA-No. 24-1219.11
Expiration Date 03/24/2030
By Ishaq I. Chanda
Miami-Dade Product Control

Revision:
REVISED CO. ADDRESS
JR - 12/18/24

PREPARED BY A. LYNN MILLER
1070 TECHNOLOGY DRIVE
N. VENICE, FL 34275
(941) 480-1600

REGISTRATION #29296

PGT Custom Windows and Doors
3400 PRECISION DRIVE
N. VENICE, FL 34275
(941) 480-1600

Series	Desc.	Sheet	DWG No.	Drawn By	Date	Rev.
FD650	ELEVATIONS	3 OF 11	8000-12	JENS ROSOWSKI	12/23/04	1

Title: ALUM. FRENCH DOOR & SIDE LITES (NI)

ANTHONY LYNN MILLER
LICENSE
No. 58705
STATE OF FLORIDA
PROFESSIONAL ENGINEER
12/18/24

A. LYNN MILLER, P.E.
P.E.# 58705

VERTICAL SECTION A
NARROW AND FULL JAMB SIDE LITE HEAD

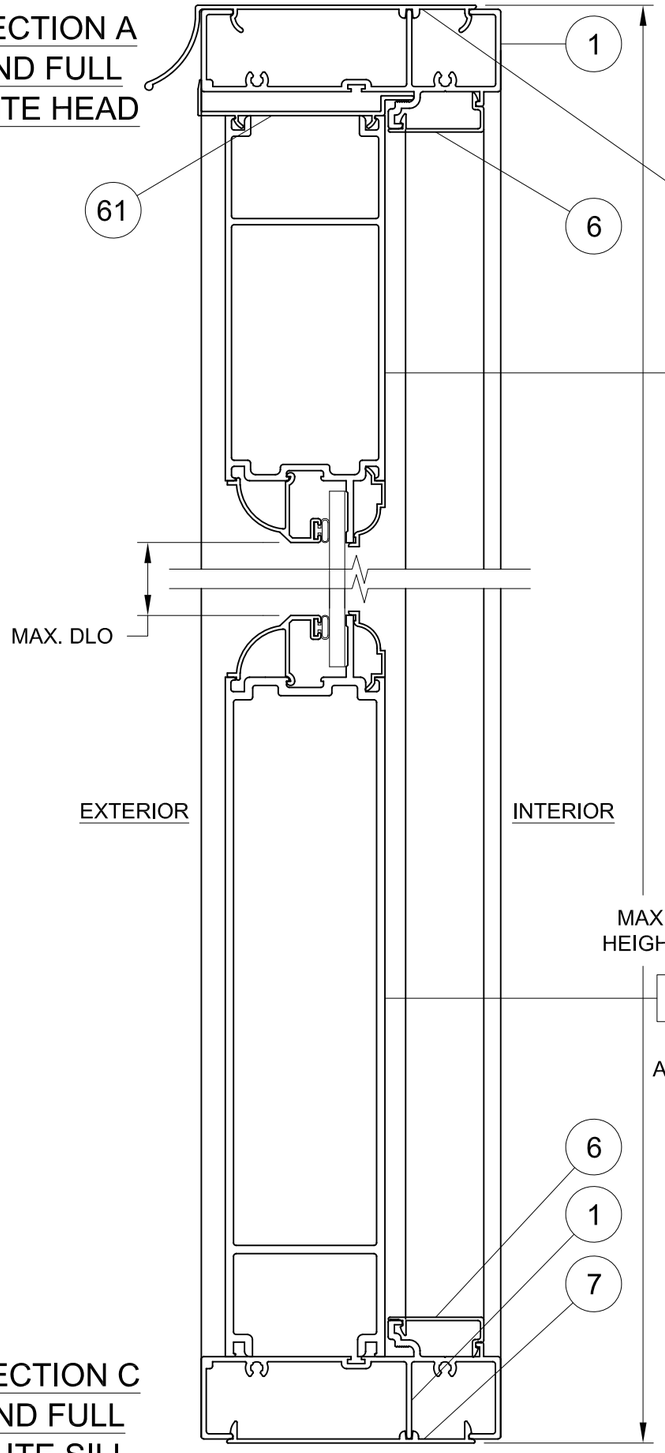

VERTICAL SECTION B
OUTSWING HEAD

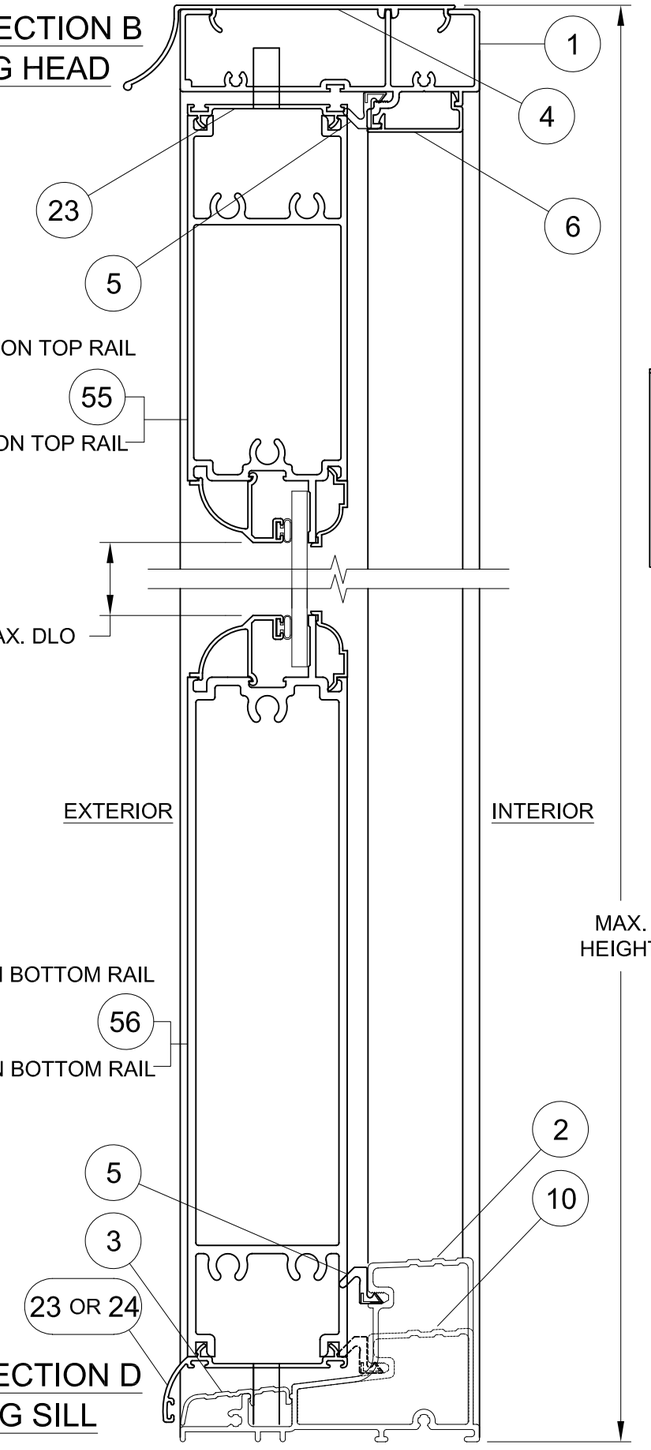

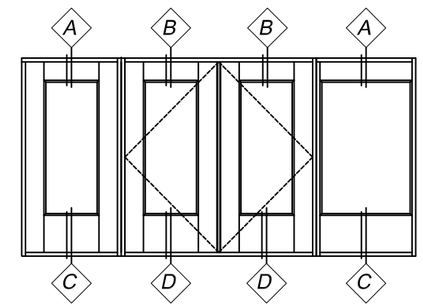

VERTICAL SECTION C
NARROW AND FULL JAMB SIDE LITE SILL

VERTICAL SECTION D
OUTSWING SILL

PRODUCT RENEWED
as complying with the Florida Building Code
NOA–No. 24-1219.11
Expiration Date 03/24/2030
By Ishaq I. Chanda
Miami–Dade Product Control

Revision:
REVISED CO. ADDRESS
JR - 12/18/24

PREPARED BY A. LYNN MILLER
1070 TECHNOLOGY DRIVE
N. VENICE, FL 34275
(941) 480-1600
REGISTRATION #29296

PGT Custom Windows and Doors
3400 PRECISION DRIVE
N. VENICE, FL 34275
(941) 480-1600

Series	Desc.	Sheet	DWG No.	Rev.
FD650	VERTICAL SECTION	4 OF 11	8000-12	1

Title: ALUM. FRENCH DOOR & SIDE LITES (NI)
Drawn By: JENS ROSOWSKI
Date: 12/23/04

ANTHONY LYNN MILLER
LICENSE
No. 58705
A. Lynn Miller
12/18/24
STATE OF FLORIDA
PROFESSIONAL ENGINEER
A. LYNN MILLER, P.E.
P.E.# 58705

OXXO HORIZONTAL SECTION SHOWING (1) OF EACH SIDE LITE TYPE

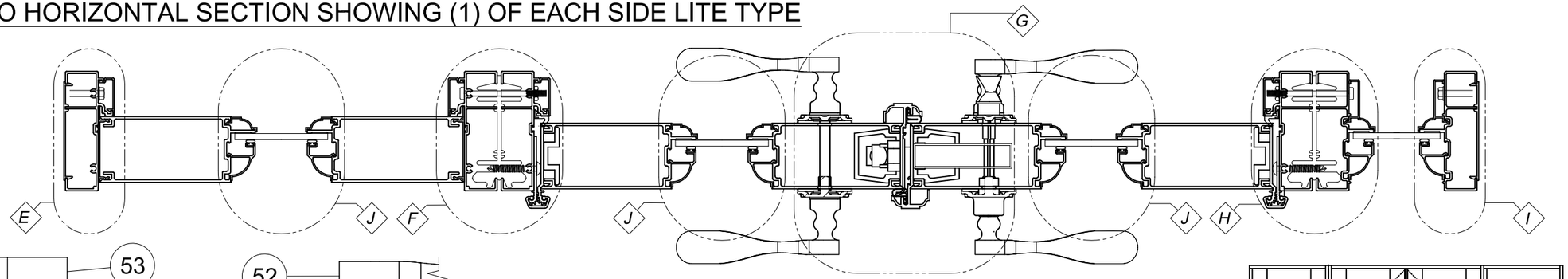

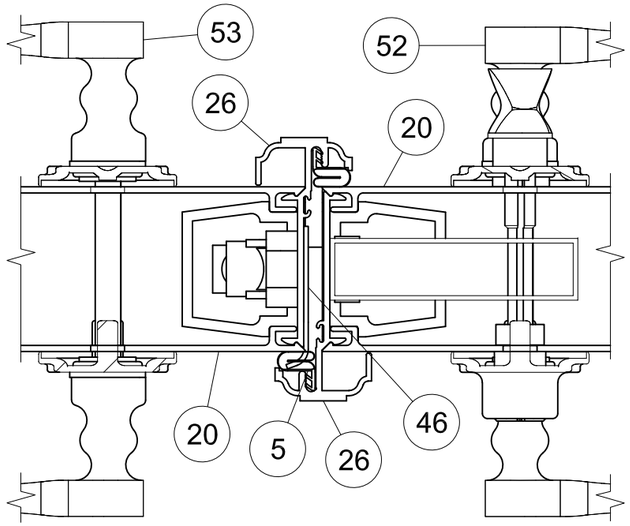

DETAIL G STILES AT ASTRAGAL

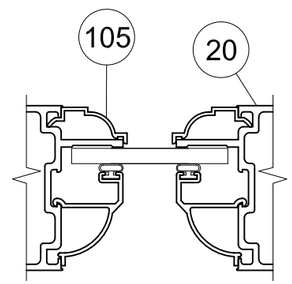

DETAIL J
SLAB AT
GLASS BED

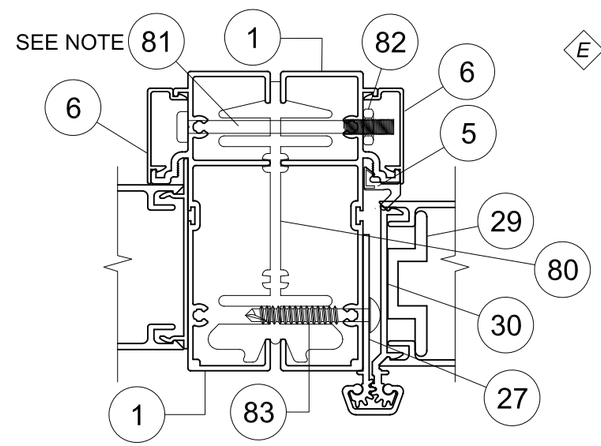

DETAIL F
FULL JAMB SIDE LITE
(AT HINGE JAMB)

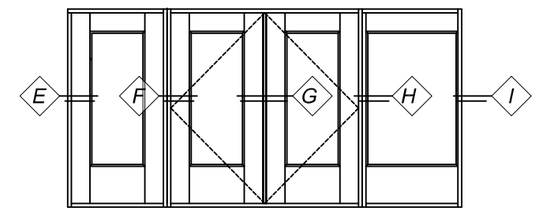

NOTE: ASSEMBLY HARDWARE QTY (3), 11"
FROM TOP & BOTTOM AND ONE AT MIDSPAN

INTERIOR

EXTERIOR

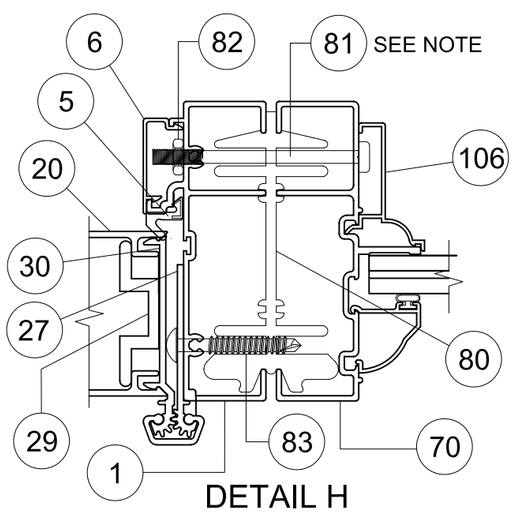

DETAIL H
NARROW JAMB SIDE LITE
(AT HINGE JAMB)

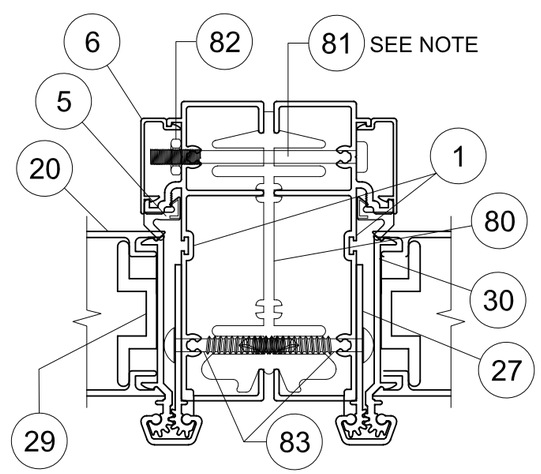

DETAIL K
HINGE JAMB TO HINGE JAMB
(NOT SHOWN ABOVE)

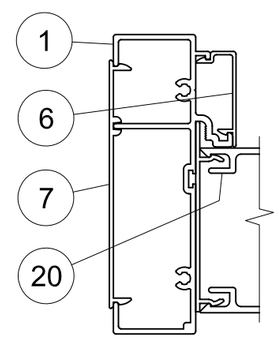

DETAIL E
JAMB, FULL JAMB
SIDE LITE

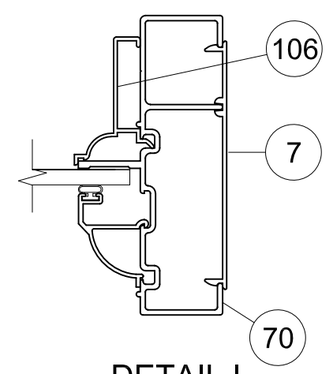

DETAIL I
JAMB, NARROW
JAMB SIDE LITE

PRODUCT RENEWED
as complying with the Florida Building Code
NOA–No. 24-1219.11
Expiration Date 03/24/2030
By Ishaq I. Chanda
Miami–Dade Product Control

Revision: REVISED CO. ADDRESS
JR - 12/18/24

PREPARED BY A. LYNN MILLER
1070 TECHNOLOGY DRIVE
N. VENICE, FL 34275
(941) 480-1600
REGISTRATION #29296

PGT Custom Windows and Doors
3400 PRECISION DRIVE
N. VENICE, FL 34275
(941) 480-1600

Series	Sheet	DWG No.	Rev.
FD650	5 OF 11	8000-12	1

Desc. HORIZONTAL SECTION DETAILS
Title ALUM. FRENCH DOOR & SIDE LITES (NI)
Drawn By JENS ROSOWSKI
Date 12/23/04

ANTHONY LYNN MILLER
LICENSE
No. 58705
A. Lynn Miller
12/18/24
STATE OF
FLORIDA
PROFESSIONAL ENGINEER

A. LYNN MILLER, P.E.
P.E.# 58705

FD650 DOOR(S)

ITEM	DWG#	DESCRIPTION	PGT#
		FRAME KIT PARTS	
1	8006	FRAME - HEAD & HINGE JAMB	68006
2	8003C	OUT-SWING SILL	68003A
3	8004C	OUT-SWING SILL COVER	68004C
4	8008	DRIP CAP	68008
5	----------	HEAD, SILL & JAMB WEATHERSTRIP (SCHLEGAL)	U83337T8500
6	8007	SCREW COVER	68007
7	8009	INSTALL PLATE	68009
8	----------	FRAME ASSEMBLY SCREW #8 X 1" PH QUAD	781PQA
9	8032	ASTRAGAL END SEAL	48032
10	8058A	OUT-SWING SILL (LOW RISE)	48058
		DOOR PANEL	
5	----------	HEAD, SILL & JAMB WEATHERSTRIP (SCHLEGAL)	U83337T8500
20	8012	STILE	68012
21	8014	TOP RAIL, (THREADED ROD DESIGN)	68014
22	8013	BOTTOM RAIL, (THREADED ROD DESIGN)	68013
23	8017	TOP SWEEP	68017
24	8016	BOTTOM SWEEP	68016
25	----------	SWEEP SCREWS, #4 X 1/2" PHIL PH	
26	8015	ASTRAGAL, ACTIVE & INACTIVE	68015
27	8021B	GEAR HINGE, JAMB SIDE	68021B
28	8020A	GEAR HINGE, COVER	68020A
29	8018	GEAR HINGE, BACK-UP PLATE	68018
30	8019A	GEAR HINGE, DOOR SIDE	68019A
31	8035	GEAR HINGE, BEARING	68035
32	----------	GEAR HINGE, SET-SCREW #6-32 x 1/4"	
33	----------	GEAR HINGE, MTG. SCREW #12 x 3/4" TRUSS HD.	
34	----------	GEAR HINGE, MTG. SCREW #12 x 1 1/2" TRUSS HD.	
35	----------	THREADED ROD 5/16-18 X 36"	6TRODA
36	----------	FLANGED HEX NUT 5/16-18	7990NUTA
37	8039	TRUSS CLAMP	60378M
38	8043	S/S GEAR LATCH MECHANISM (ASHLAND)	
39	8030	LOCK BLOCK	48030
40	----------	LATCH ASS'Y SCREWS #8 X 2" SS PHILL TR HD	78X2TPAX
41	8037	S/S SHOOT BOLT ROD (SULLIVAN)	
42	8045	STANDARD FLUSH BOLTS W/ SS ROD (SULLIVAN)	
43	8031	SHOOT BOLT GUIDE	48031
44	----------	SHOOT BOLT GUIDE & STRIKE SCREW 8-32 X 3/8" SS PHILL TR HD	78X38PFTX
45	8038R	RIGHT- STRIKE PLATE AT ASTRAGAL (ACTIVE HINGED LEFT)	W5110-43S1
46	8038L	LEFT - STRIKE PLATE AT ASTRAGAL (ACTIVE HINGED RIGHT)	W5110-44S1
47	----------	STRIKE PLATE SCREWS 8-32 X 3/8" SS PHILL TR HD	78X38PFTX
48	----------	STRIKE PLATE MIDDLE SCREW 6-24 X 1/2" FH	7612FPTX
49	8036	STRIKE PLATE AT HEAD & SILL	
50	----------	HEAD STRIKE SCREWS SS 8 X 1/2 PHILL FH	7858ZAX
51	----------	STRIKE PLATE SCREWS @SILL SS 8 X 1/2 PHILL UNDERCUT FH	78X12PFHUX
52	8041	ACTIVE TRIM SET (ASHLAND)	
53	8042	PASSIVE TRIM SET (ASHLAND)	
54	8044	STAINLESS STEEL PASSIVE LOCK GEAR (ASHLAND)	
55	8014A	TOP RAIL (LAG BOLT DESIGN)	68014A
56	8013A	BOTTOM RAIL (LAG BOLT DESIGN)	68013A

FD650 FULL JAMB SIDE LITE

ITEM	DWG #	DESCRIPTION	PGT#
1	8006	FRAME - HEAD, SILL & JAMB	68006
4	8008	DRIP CAP	68008
6	8007	SCREW COVER	68007
7	8009	INSTALL PLATE	68009
8	----------	FRAME ASSEMBLY SCREW #8 X 1" PH QUAD	781PQA
20	8012	STILE	68012
21	8014	TOP RAIL	68014
22	8013	BOTTOM RAIL	68013
35	----------	THREADED ROD 5/16-18 X 36"	6TRODA
36	----------	FLANGED HEX NUT 5/16-18	7990NUTA
37	8039	TRUSS CLAMP	60378M
60	----------	#8 X 3/4" PH SQ DRIVE TEK SCREW	78X34PSTW
61	8028	SIDE LITE HEAD TRIM	68028
62	8029	SIDE LITE JAMB TRIM	68029

FD650 NARROW JAMB SIDE LITE

1	8006	FRAME - HEAD & SILL	68006
4	8008	DRIP CAP	68008
6	8007	SCREW COVER	68007
7	8009	INSTALL PLATE	68009
8	----------	FRAME ASSEMBLY SCREW #8 X 1" PH QUAD	781PQA
21	8014	TOP RAIL	68014
22	8013	BOTTOM RAIL	68013
35	----------	THREADED ROD 5/16-18 X 36"	6TRODA
36	----------	FLANGED HEX NUT 5/16-18	7990NUTA
37	8039	TRUSS CLAMP	60378M
60	----------	#8 X 3/4" PH SQ DRIVE TEK SCREW	78X34PSTW
61	8028	SIDE LITE HEAD TRIM	68028
70	8010	FRAME, JAMB	68010

ASSEMBLY KIT

80	8033B	FRENCH DOOR ASSEMBLY BEAM	68033B
81	----------	#10-24 X 2 1/2" PH SCREW	
82	----------	#10-24 HEX NUT	
83	----------	#12 X 1 1/2" TR HD TEK SCREW	
84	8056	SUBSILL (OPTIONAL)	68056

GLASS, BEADS & SILICONE

90	----------	GLAZING SEALANT, DOW CORNING 791, 899, 983 OR 995	
100	----------	3/16" TEMPERED GLASS	
101	----------	7/8" I.G. GLASS (3/16"T, 1/2" AIR SPACE, 3/16"T)	
102	8025	3/16" BEAD	68025
105	8022	BACK BEAD	68022
106	8026A	SL BACKBEAD	68026A
108	8024A	7/8" IG BEAD	68024A
109	1224	VINYL BULB WSTP (THICK)	6TP247

PRODUCT RENEWED
as complying with the Florida Building Code
NOA–No. 24-1219.11
Expiration Date 03/24/2030
By Ishaq I. Chanda
Miami–Dade Product Control

Revision: REVISED CO. ADDRESS
JR - 12/18/24

PREPARED BY A. LYNN MILLER
1070 TECHNOLOGY DRIVE
N. VENICE, FL 34275
(941) 480-1600
REGISTRATION #29296

PGT Custom Windows and Doors
3400 PRECISION DRIVE
N. VENICE, FL 34275
(941) 480-1600

Title: ALUM. FRENCH DOOR & SIDE LITES (NI)
Desc.: PARTS LIST
Date: 12/23/04
Drawn By: JENS ROSOWSKI
DWG No.: 8000-12
Rev.: 1
Sheet: 6 OF 11
Series: FD650

ANTHONY LYNN MILLER
LICENSE
No. 58705
A. Lynn Miller
12/18/24
STATE OF FLORIDA
PROFESSIONAL ENGINEER
A. LYNN MILLER, P.E.
P.E.# 58705

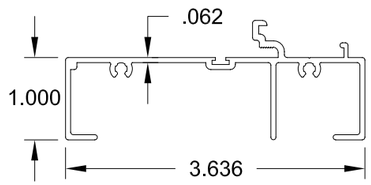

1 #8006 6063-T6
FRAME, HEAD, JAMB
AND SIDELITE SILL

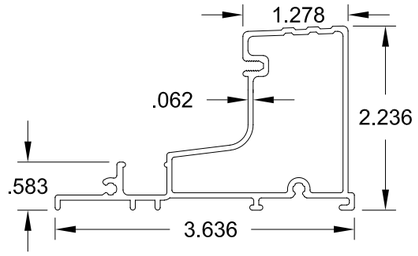

2 #8003C 6063-T6
OUT-SWING SILL

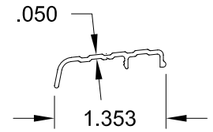

3 #8004C 6063-T5
OS SILL COVER

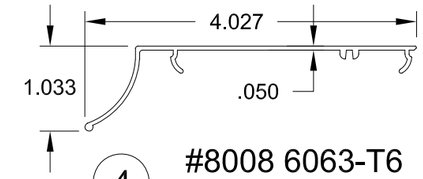

4 #8008 6063-T6
DRIP CAP

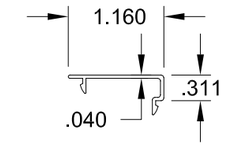

6 #8007 6063-T6
SCREW COVER

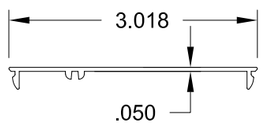

7 #8009 6063-T6
INSTALL PLATE

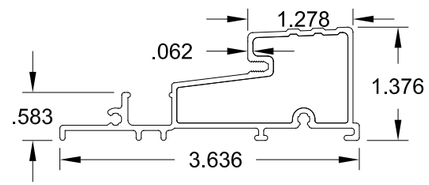

10 #8058A 6063-T6
OUT-SWING LOW SILL

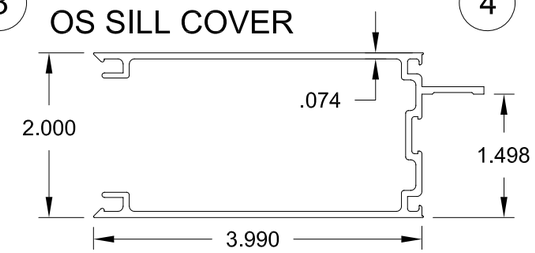

20 #8012 6063-T6
STILE

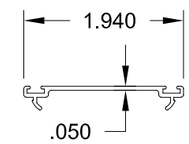

23 #8017 6063-T5
TOP SWEEP

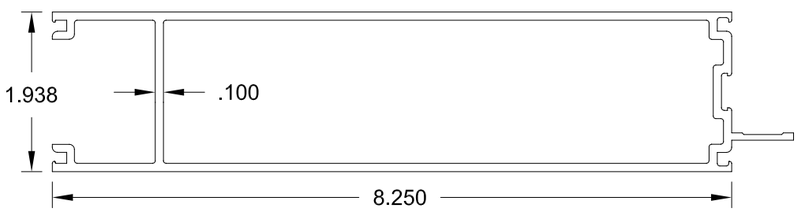

22 #8013 6063-T6
BOTTOM RAIL

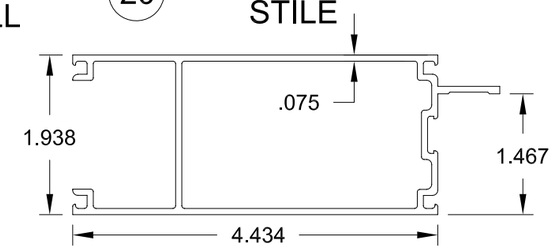

21 #8014 6063-T5
TOP RAIL

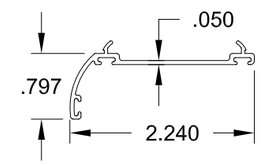

24 #8016 6063-T5
BOTTOM SWEEP

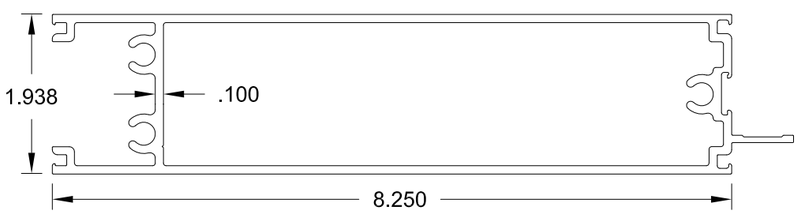

56 #8013A 6063-T6
BOTTOM RAIL, LAG BOLT DESIGN

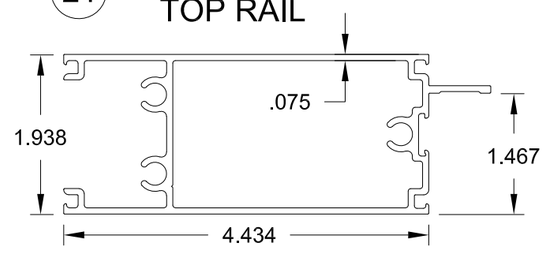

55 #8014A 6063-T5
TOP RAIL, LAG BOLT DESIGN

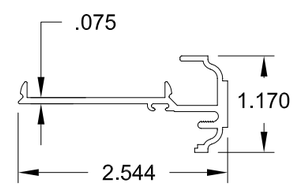

26 #8015 6063-T6
ASTRAGAL

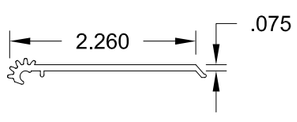

27 #8021B 6063-T6
GEAR HINGE, JAMB

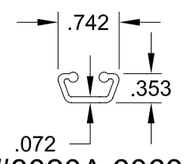

28 #8020A 6063-T6
GEAR HINGE, COVER

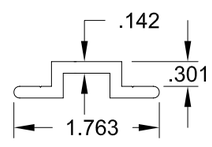

29 #8018 6063-T5
HINGE, BACK-UP

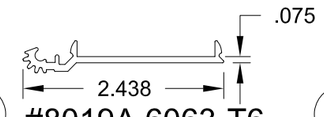

30 #8019A 6063-T6
GEAR HINGE, DOOR

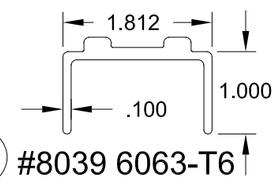

37 #8039 6063-T6
TRUSS CLAMP

PRODUCT RENEWED
as complying with the Florida Building Code
NOA–No. 24-1219.11
Expiration Date 03/24/2030
By Ishaq I. Chanda
Miami–Dade Product Control

Revision:
REVISED CO. ADDRESS
JR - 12/18/24

PREPARED BY A. LYNN MILLER
1070 TECHNOLOGY DRIVE
N. VENICE, FL 34275
(941) 480-1600

REGISTRATION #29296

PGT Custom Windows and Doors
3400 PRECISION DRIVE
N. VENICE, FL 34275
(941) 480-1600

Series	Desc.	Sheet	DWG No.	Rev.
FD650	EXTRUSION PROFILES	7 OF 11	8000-12	1

Title: ALUM. FRENCH DOOR & SIDE LITES (NI)
Drawn By: JENS ROSOWSKI
Date: 12/23/04

ANTHONY LYNN MILLER
LICENSE
No. 58705
12/18/24
STATE OF FLORIDA
PROFESSIONAL ENGINEER
A. LYNN MILLER, P.E.
P.E.# 58705

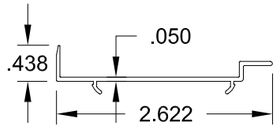

61 #8028 6063-T5
SL HEAD TRIM

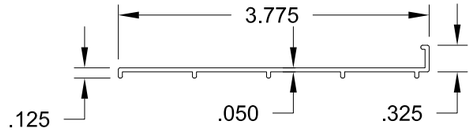

84 #8056 6063-T4
SUBSILL, OPTIONAL

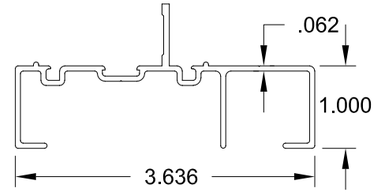

70 #8010 6063-T6
NARROW SL JAMB

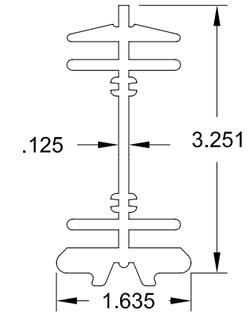

80 #8033B 6105-T5
FD ASS'Y BEAM

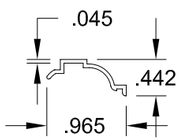

105 #8022 6063-T5
BACKBEAD

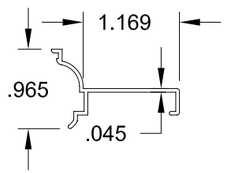

106 #8026A 6063-T5
SL BACKBEAD

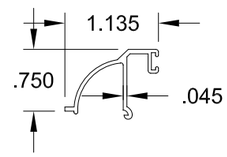

102 #8025 6063-T5
3/16" BEAD

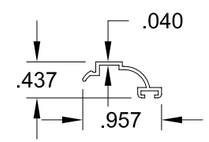

108 #8024A 6063-T5
I.G. BEAD

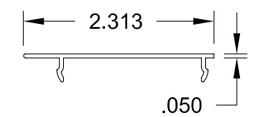

62 #8029 6063-T5
SL JAMB TRIM

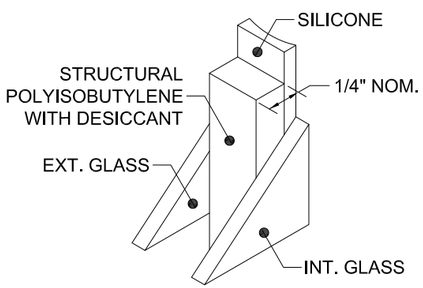

110 KODISPACE
4SG TPS

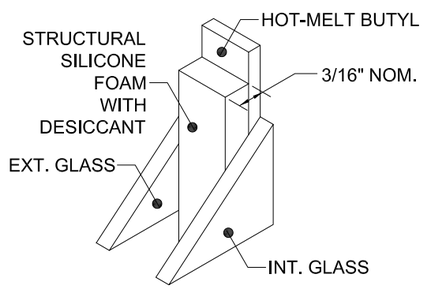

111 SUPER
SPACER® NXT™

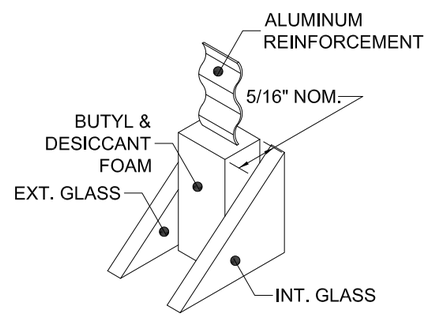

112 DURASEAL®
SPACER

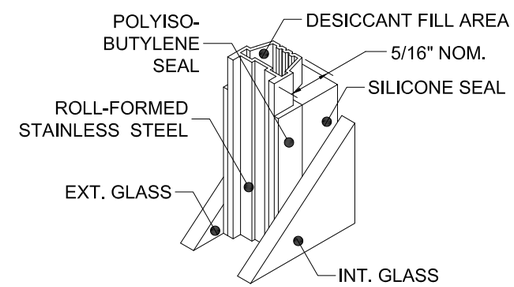

113 XL EDGE™
SPACER

Part #	Description	Material
110	Kommerling 4SG TPS Spacer System	See this Sheet for Materials
111	Quanex Super Spacer nXT with Hot Melt Butyl	
112	Quanex Duraseal Spacer	
113	Cardinal XL Edge Spacer	

REFERENCE TEST REPORTS: FTL-8717, 8968 & 8970

PRODUCT RENEWED
as complying with the Florida Building Code
NOA-No. 24-1219.11
Expiration Date 03/24/2030
By Ishaq I. Chanda
Miami-Dade Product Control

Revision: REVISED CO. ADDRESS
JR - 12/18/24

PREPARED BY A. LYNN MILLER
1070 TECHNOLOGY DRIVE
N. VENICE, FL 34275
(941) 480-1600
REGISTRATION #29296

PGT Custom Windows and Doors
3400 PRECISION DRIVE
N. VENICE, FL 34275
(941) 480-1600

Title	Desc.	Series	Sheet	DWG No.	Drawn By	Date	Rev.
ALUM. FRENCH DOOR & SIDE LITES (NI)	EXTRUSION PROFILES	FD650	8 OF 11	8000-12	JENS ROSOWSKI	12/23/04	1

ANTHONY LYNN MILLER
LICENSE
No. 58705
A. Lynn Miller
12/18/24
STATE OF FLORIDA
PROFESSIONAL ENGINEER
A. LYNN MILLER, P.E.
P.E.# 58705

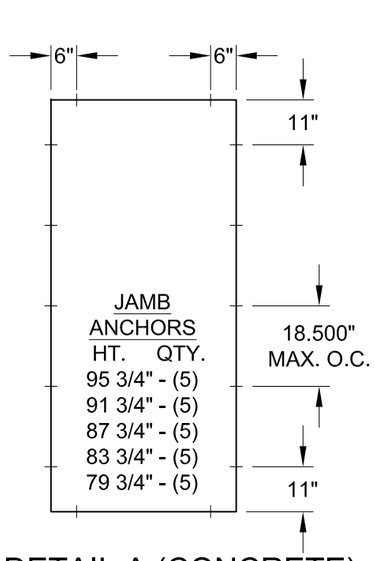

DETAIL A (CONCRETE)
(SINGLE PANEL)
ANCHOR TYPES:
B OR C

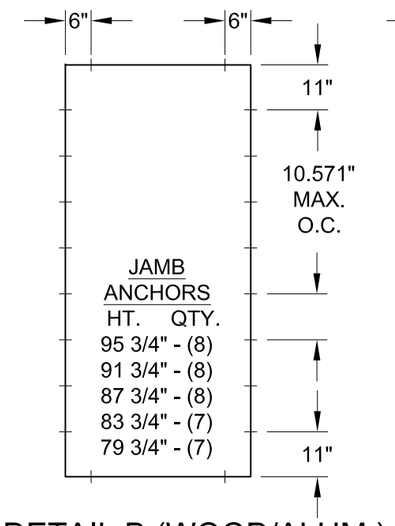

DETAIL B (WOOD/ALUM.)
(SINGLE PANEL)
ANCHOR TYPES:
C OR A

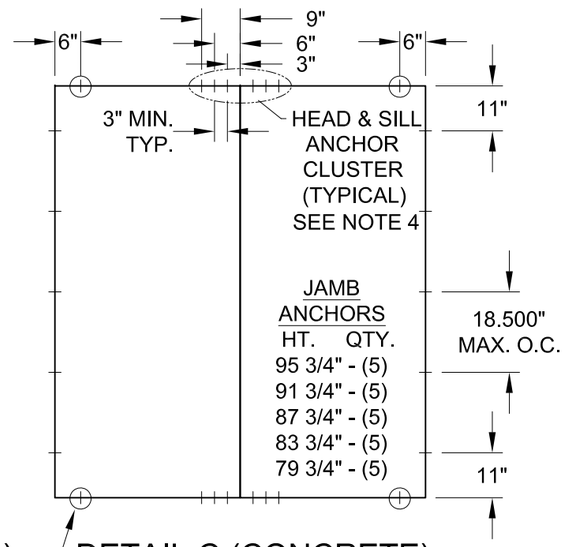

DETAIL C (CONCRETE)
(2 OR MORE PANELS)
ANCHOR TYPES:
B OR C

SEE NOTE 4 REGARDING
APPLICABLITY OF CIRCLED
ANCHOR LOCATIONS

SEE NOTE 5
REGARDING
APPLICABLITY
OF CIRCLED
ANCHOR
LOCATIONS

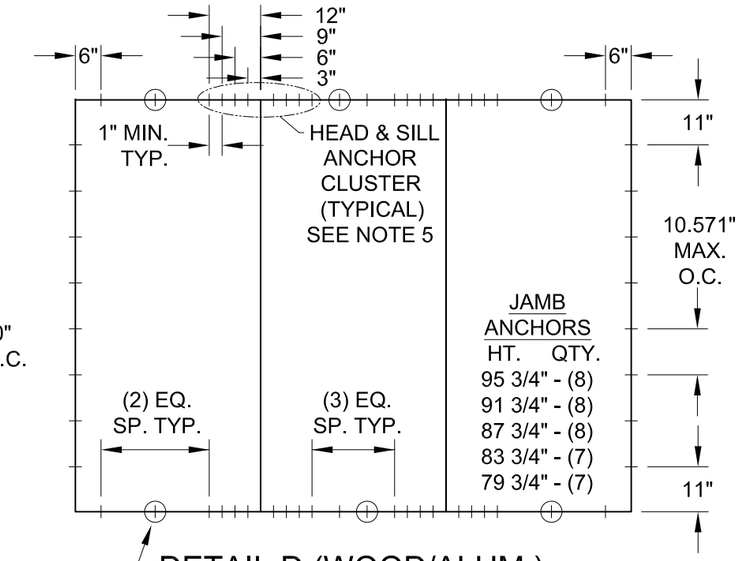

DETAIL D (WOOD/ALUM.)
(2 OR MORE PANELS)
ANCHOR TYPES:
C OR A

ANCHORAGE SPACING REQUIREMENTS:

1. DETAILS A AND B ABOVE REPRESENT ANCHORING OF SINGLE X DOORS, OR INDIVIDUAL SIDE LITE O PANELS WITH FULL OR NARROW WIDTH JAMBS. DETAILS C AND D ABOVE REPRESENT ANCHORING OF ANY MIXTURE OF DOUBLE XX DOORS, SINGLE X DOORS, NARROW JAMB OR FULL JAMB SIDE LITE PANELS, FOR MULTIPLE-PANEL INSTALLATIONS OF TWO OR MORE PANELS. UNLESS OTHERWISE STATED, DIMENSIONS OF DETAILS A THROUGH D ARE MAXIMUMS.

2. ANCHOR TYPES: SEE TABLE A, SHEET 1 FOR ANCHOR TYPES, SUBSTRATES AND LIMITATIONS.

3. SINGLE PANEL CONFIGURATIONS: (DETAIL A, CONCRETE SUBSTRATE. DETAIL B, WOOD/ALUM. SUBSTRATE)

   HEAD AND SILL.....6" MAX. FROM FRAME CORNERS.
   JAMBS.....11" MAX. FROM FRAME CORNERS, 18.500" MAX. O.C. CONCRETE SUBSTRATE (DETAIL A) AND 10.571" MAX. O.C. WOOD SUBSTRATE (DETAIL B).

4. TWO OR MORE PANEL CONFIGURATIONS: (DETAIL C, CONCRETE SUBSTRATE)
   HEAD AND SILL: 6" MAX. FROM FRAME CORNERS IF PANEL WIDTH IS 15" OR GREATER AND
   AT 3", 6" AND 9" MAX. ON EACH SIDE OF ASSEMBLY BEAM AND/OR ASTRAGAL LOCATIONS (CLUSTER OF 6).

   JAMBS: 11" MAX. FROM FRAME CORNERS AND 18.500" MAX. O.C

5. TWO OR MORE PANEL CONFIGURATIONS: (DETAIL D, WOOD/ALUM. SUBSTRATE)
   HEAD AND SILL: 6" MAX. FROM FRAME CORNERS AND
   AT 3", 6", 9" AND 12" MAX. ON EACH SIDE OF ASSEMBLY BEAM AND/OR ASTRAGAL LOCATIONS (CLUSTER OF 8).
   CIRCLED ANCHOR OUTSIDE CLUSTER REQUIRED IF PANEL WIDTH IS OVER 27-3/4".

   JAMBS: 11" MAX. FROM FRAME CORNERS AND 10.571" MAX. O.C

PRODUCT RENEWED
as complying with the Florida Building Code
NOA-No. 24-1219.11
Expiration Date 03/24/2030
By Ishaq I. Chanda
Miami-Dade Product Control

Revision: REVISED CO. ADDRESS
JR - 12/18/24

PREPARED BY A. LYNN MILLER
1070 TECHNOLOGY DRIVE
N. VENICE, FL 34275
(941) 480-1600
REGISTRATION #29296

PGT Custom Windows and Doors
3400 PRECISION DRIVE
N. VENICE, FL 34275
(941) 480-1600

Series	Desc.	DWG No.	Sheet	Title	Drawn By	Date	Rev.
FD650	ANCHORAGE SPACING	8000-12	9 OF 11	ALUM. FRENCH DOOR & SIDE LITES (NI)	JENS ROSOWSKI	12/23/04	1

ANTHONY LYNN MILLER
LICENSE
No. 58705
A. Lynn Miller
12/18/24
STATE OF
FLORIDA
PROFESSIONAL ENGINEER
A. LYNN MILLER, P.E.
P.E.# 58705

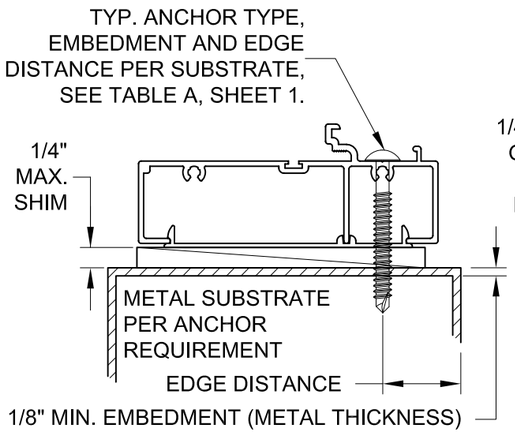

TYPICAL SIDE LITE SILL
(DIRECT TO METAL)

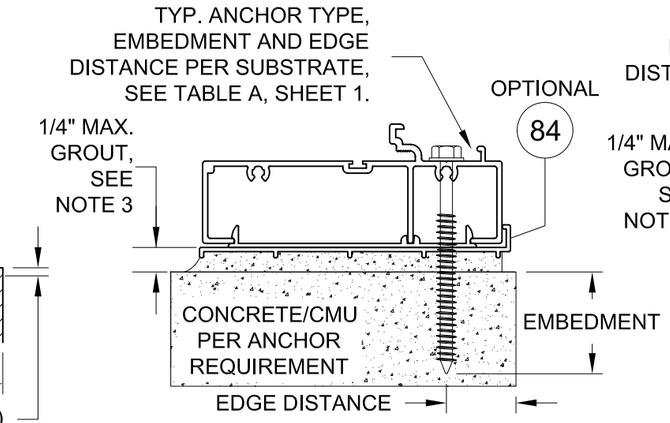

TYPICAL SIDE LITE SILL
(DIRECT TO CONCRETE)

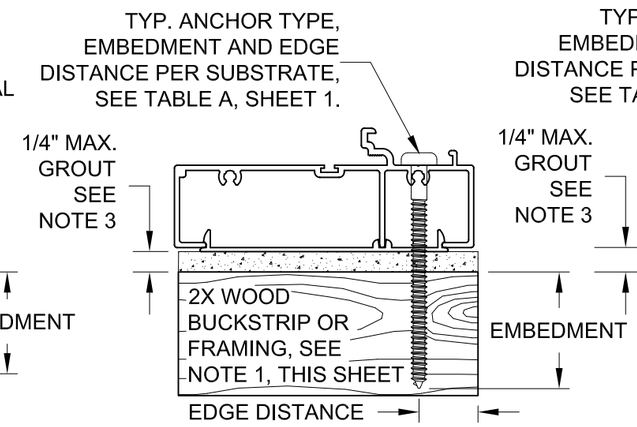

TYPICAL SIDE LITE SILL
(DIRECT TO WOOD)

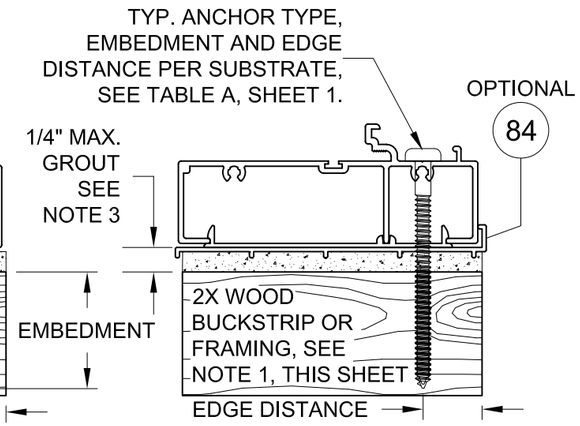

TYPICAL SIDE LITE SILL
(DIRECT TO WOOD)

EXTERIOR INTERIOR
(ALL HEAD & SILL SECTIONS)

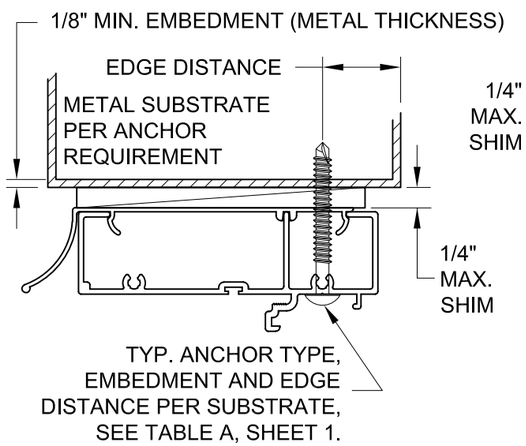

TYPICAL DOOR & SIDE LITE HEAD
(DIRECT TO METAL)

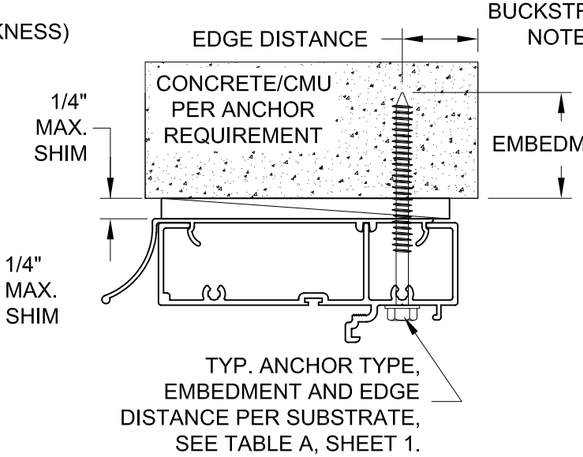

TYPICAL DOOR & SIDE LITE HEAD
(DIRECT TO CONCRETE)

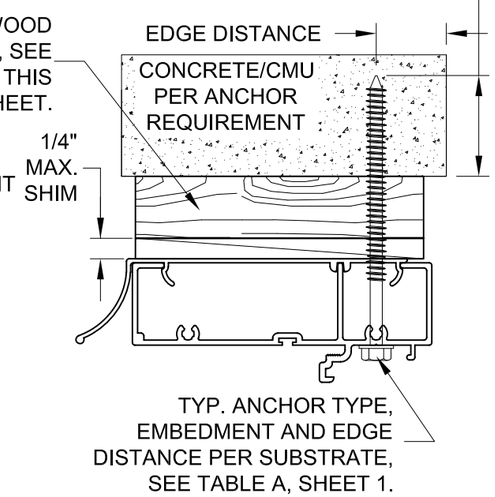

TYPICAL DOOR & SIDE LITE HEAD
(THRU 1X INTO CONCRETE)

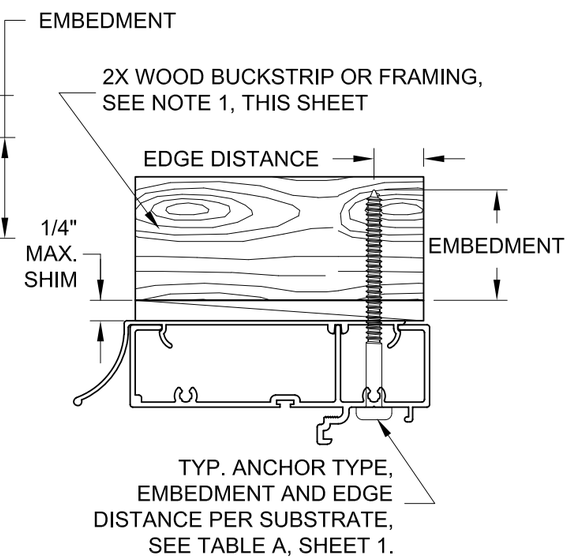

TYPICAL DOOR & SIDE LITE HEAD
(DIRECT TO WOOD)

NOTES:

1. WOOD BUCKS DEPICTED AS 1x ARE LESS THAN 1-1/2" THICK. 1x WOOD BUCKS ARE OPTIONAL IF UNIT IS INSTALLED DIRECTLY TO SOLID CONCRETE. WOOD BUCKS DEPICTED AS 2x ARE 1-1/2" THICK OR GREATER. INSTALLATION TO THE SUBSTRATE OF WOOD BUCKS TO BE ENGINEERED BY OTHERS OR AS APPROVED BY THE AUTHORITY HAVING JURISDICTION (AHJ).
2. FOR ATTACHMENT TO ALUM: THE MAT'L SHALL BE A MIN. STRENGTH OF 6063-T5 AND A MIN. OF 1/8" THICK. THE ALUM. STRUCTURAL MEMBER SHALL BE OF A SIZE TO PROVIDE FULL SUPPORT TO THE DOOR FRAME SIMILAR TO THAT SHOWN IN THE DETAILS ON THIS SHEET FOR 2x WOOD BUCKS. THE ANCHOR SHALL BE A #12 SMS WITH FULL ENGAGEMENT INTO THE ALUM. IF THESE CRITERIA ARE MET, THE PRESSURES SHOWN ON SHEET 2 AND ANCHORAGE SPACING FOR WOOD SHOWN ON SHEET 10 MAY BE USED.
3. IF SILL IS TIGHT TO SUBSTRATE, GROUT OR OTHER MATERIAL IS NOT REQUIRED. IF USED, NON-SHRINK, NON-METALLIC GROUT, 3400 PSI MIN., (DONE BY OTHERS) MUST FULLY SUPPORT THE ENTIRE LENGTH OF THE SILL THAT IS NOT TIGHT TO THE SUBSTRATE, AND TRANSFER SHEAR LOAD TO SUBSTRATE.

PRODUCT RENEWED
as complying with the Florida Building Code
NOA-No. 24-1219.11
Expiration Date 03/24/2030
By Ishaq I. Chanda
Miami-Dade Product Control

Revision: REVISED CO. ADDRESS
JR - 12/18/24

PREPARED BY A. LYNN MILLER
1070 TECHNOLOGY DRIVE
N. VENICE, FL 34275
(941) 480-1600
REGISTRATION #29296

PGT Custom Windows and Doors
3400 PRECISION DRIVE
N. VENICE, FL 34275
(941) 480-1600

Series	Desc.	Sheet	DWG No.	Rev.
FD650	ANCHORAGE DETAILS	10 OF 11	8000-12	1

Title: ALUM. FRENCH DOOR & SIDE LITES (NI)
Drawn By: JENS ROSOWSKI
Date: 12/23/04

ANTHONY LYNN MILLER
LICENSE
No. 58705
A. Lynn Miller
12/18/24
STATE OF FLORIDA
PROFESSIONAL ENGINEER
A. LYNN MILLER, P.E.
P.E.# 58705

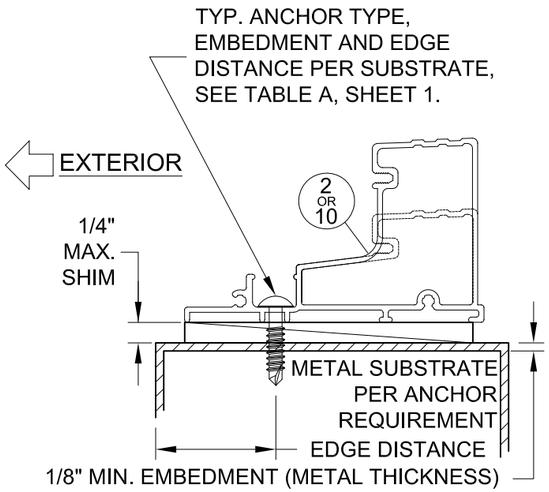

TYPICAL DOOR SILL
(DIRECT TO METAL)

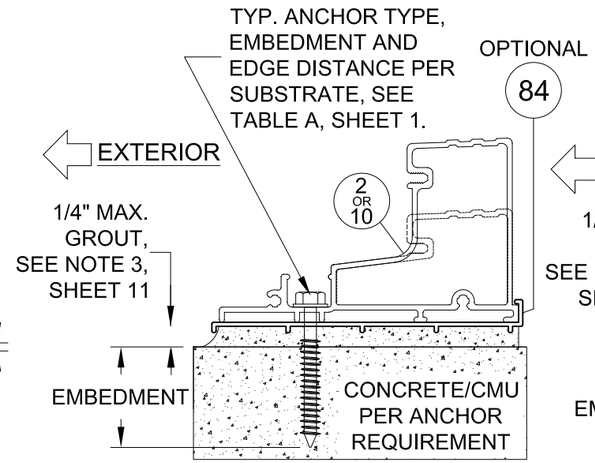

TYPICAL DOOR SILL
(DIRECT TO CONCRETE)

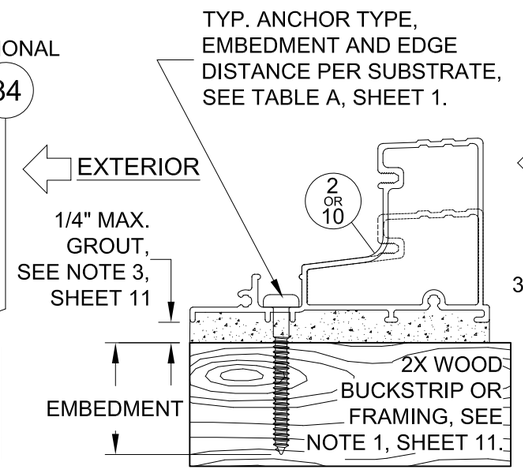

TYPICAL DOOR SILL
(DIRECT TO WOOD)

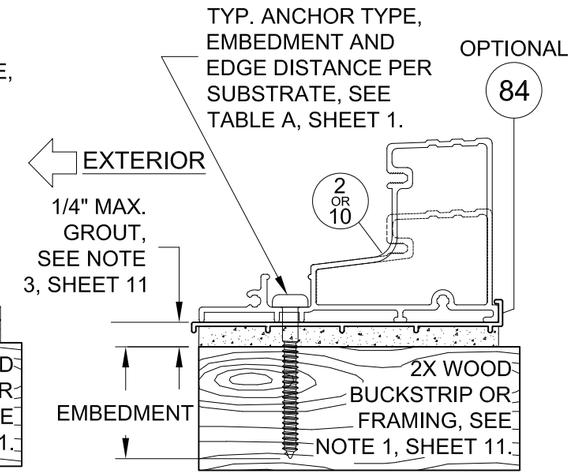

OPTIONAL DOOR SILL
(DIRECT TO WOOD)

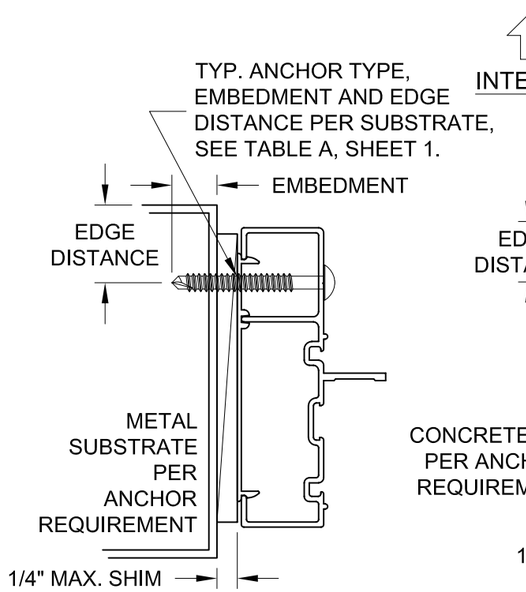

TYPICAL DOOR & SIDE LITE JAMB
(DIRECT TO METAL)

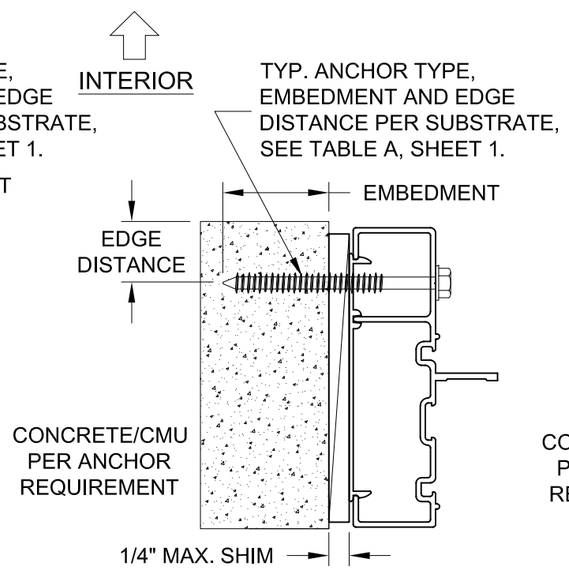

TYPICAL DOOR & SIDE LITE JAMB
(DIRECT TO CONCRETE)

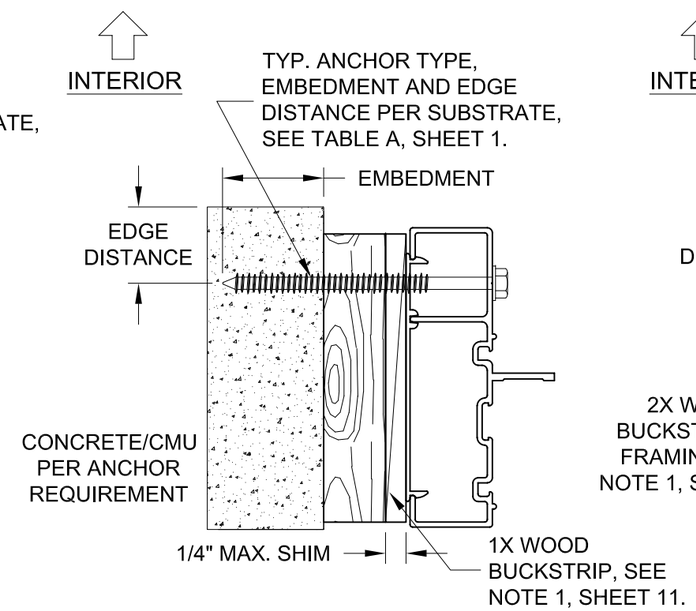

TYPICAL DOOR & SIDE LITE JAMB
(THRU 1X INTO CONCRETE)

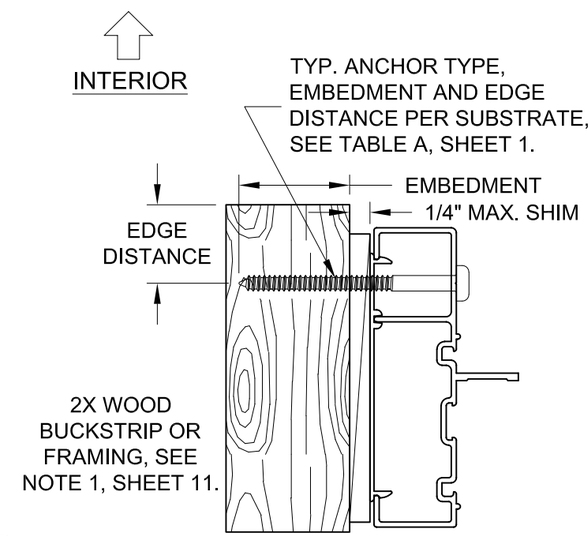

TYPICAL DOOR & SIDE LITE JAMB
(DIRECT TO WOOD)

PRODUCT RENEWED
as complying with the Florida Building Code
NOA-No. 24-1219.11
Expiration Date 03/24/2030
By Ishaq I. Chanda
Miami-Dade Product Control

Revision: REVISED CO. ADDRESS JR - 12/18/24

PREPARED BY A. LYNN MILLER
1070 TECHNOLOGY DRIVE
N. VENICE, FL 34275
(941) 480-1600
REGISTRATION #29296

PGT Custom Windows and Doors
3400 PRECISION DRIVE
N. VENICE, FL 34275
(941) 480-1600

Series	Sheet	DWG No.	Drawn By	Date	Rev.
FD650	11 OF 11	8000-12	JENS ROSOWSKI	12/23/04	1

Title: ALUM. FRENCH DOOR & SIDE LITES (NI)
Desc.: ANCHORAGE DETAILS

ANTHONY LYNN MILLER
LICENSE
No. 58705
STATE OF FLORIDA
PROFESSIONAL ENGINEER
12/18/24

A. LYNN MILLER, P.E.
P.E.# 58705