NOTES:

1. REGAL SHOWN, CELEBRITY, AMERICAN 100, CS, XL, CSX, CSL OR VANTAGE SERIES MAY BE SUBSTITUTED.
2. STRUTS ATTACHED WITH 2 SELF DRILLING SCREWS 1/4"–20 X 3/4" AT EACH STILE LOCATION
3. 4 SECTION HIGH DOOR SHOWN (7FT) ,TALLER DOOR CONFIGURATIONS MAY BE CONSTRUCTED UP TO A MAXIMUM OF 14FT HIGH, USING SAME PANEL CONSTRUCTION AS SHOWN (MAXIMUM SECTION HEIGHT OF 21").
4. MINIMUM STEEL THICKNESS FOR SECTION IS 25 GA. (.0185").
5. SECTIONS EMBOSSED 14.00"x20.375" ,16" X20.375", 14"X41", 16"X40" OR SECTIONS WITHOUT EMBOSSMENT MAY ALSO BE USED. (LOCATION AND QUANTITY OF CENTER STILES MUST BE THE SAME).
6. TORSION SPRINGS OR EXTENSION SPRINGS AVAILABLE.
7. LOCK MUST BE ATTACHED AT EACH SIDE OF THE DOOR. CAM & BAR LOCKS OR AN OPENER MAY BE SUBSTITUTED.
8. WOOD MOUNT SHOWN, STEEL AND MASONRY ANGLE AND REVERSE ANGLE MOUNT AVAILABLE. NUMBER OF JAMB BRACKET ANCHOR LOCATIONS MUST BE THE SAME.
9. JAMB DETAIL IN ACCORDANCE WITH DWG. # RCWL–0001
10. STRUT PLACEMENT SHOWN IS TYPICAL (TOP STRUTS ARE OVER THE HINGES AS SHOWN USING THE HOLES PROVIDED IN THE HINGE, BOTTOM STRUTS ARE JUST ABOVE THE TOP OF THE HINGES). SEE DETAIL E
11. THIS DOOR HAS NOT BEEN TESTED FOR WIND–BORNE DEBRIS.
12. USE THIS DRAWING IN CONJUNCTION WITH INSTALLATION INSTRUCTIONS. WHERE THE DRAWING CONFLICTS WITH OTHER INSTALLATION INSTRUCTIONS, THIS DRAWING GOVERNS.

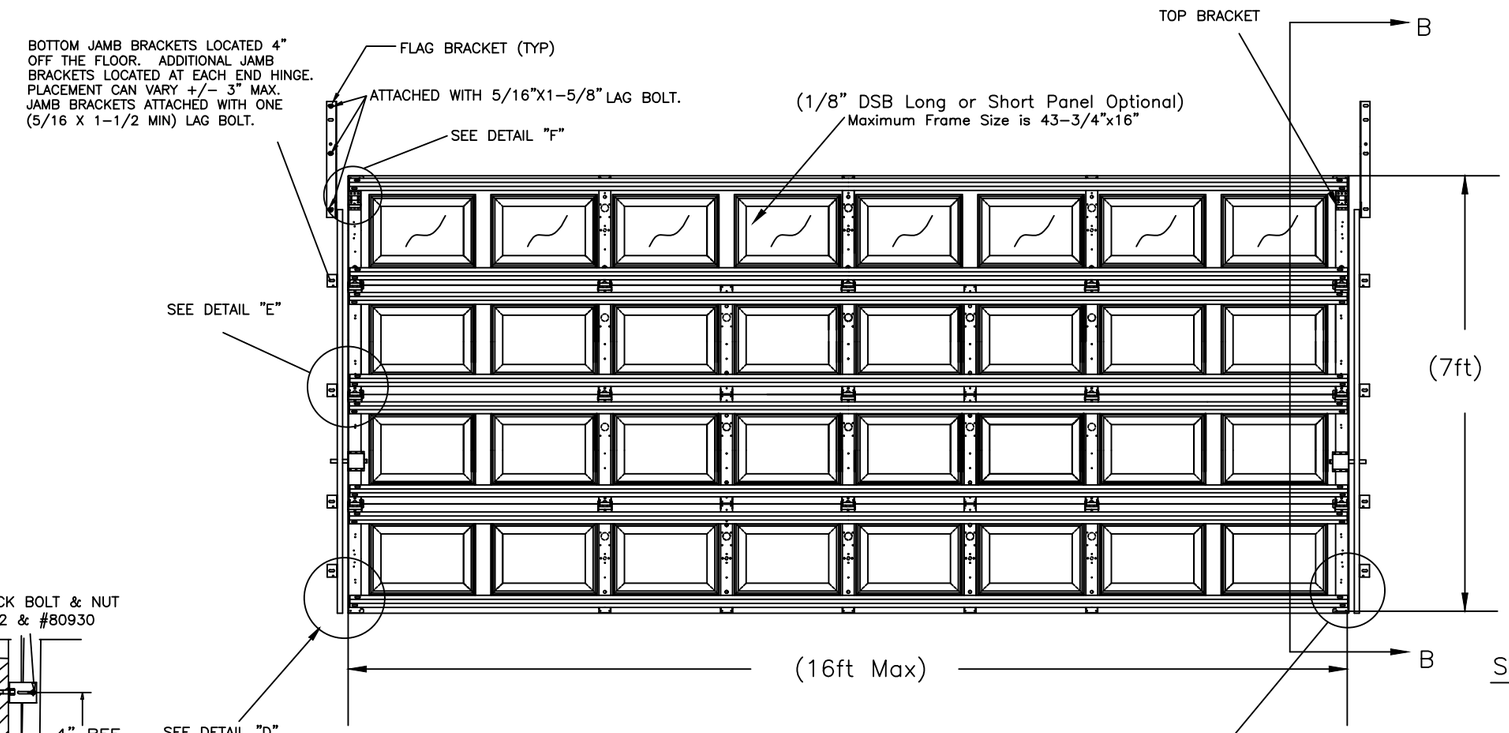

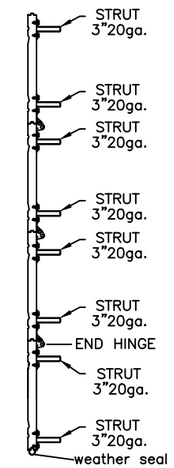

SECTION "B–B"

Strut Requirements

# sections	# Struts
	3"
4	8
5	10
6	12
7	14
8	16

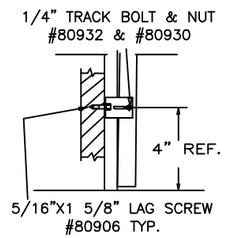

DETAIL D

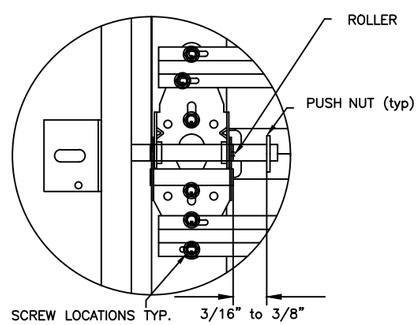

DETAIL E

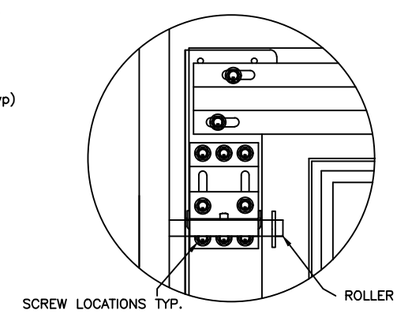

DETAIL F

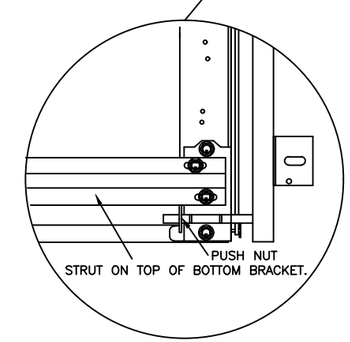

Approved Pressures

DOOR WIDTH	DESIGN PRESSURE	MIN # CENTER STILES INT	GLAZED
12'–00"	+ 35.2 PSF / –39.2 PSF	3	2
14'–00"	+ 30.1 PSF / –33.6 PSF	4	3
16'–00"	+ 26.4 PSF / –29.4 PSF	5	3
17'–00"	+ 23.3 PSF / –26.0 PSF	7	3
18'–00"	+ 20.8 PSF / –23.2 PSF	7	3
20'–00"	+ 16.8 PSF / –18.8 PSF	9	4

JOHN E. SCATES LICENSE No. 51737 STATE OF FLORIDA PROFESSIONAL ENGINEER

Digitally signed by John E Scates
Date: 2021.09.23 12:31:25 -05'00'

Printed copies of this document are not considered signed and sealed and the signature must be verified on any electronic copies.

PROFESSIONAL ENGINEER'S SEAL PROVIDED ONLY FOR VERIFICATION OF WINDLOAD CONSTRUCTION DETAILS

JOHN E. SCATES, P.E.
2560 King Arthur Blvd #124–24
Lewisville, TX 75056
FL. P.E. # 51737
TX. P.E. # 56308, F–2203

This product was tested/evaluated in accordance with ANSI/DASMA 108

Rev.	By	Date	Description	Rev.	By	Date	Description
0	BR	3/16/18	NEW DRAWING	8			
1	BR	3/16/18	updated for fbc	9			
2				10			
3				11			
4				12			
5				13			
6				14			
7				15			

SCALE N.T.S.	DATE
DRAWN BY BJR	03–16–18
INITIAL CHK. TL	03–16–18
FINAL CHK.	"
ENGR.	"
APPR. BY	"
C2229–7	

Mid–America Door Company PONCA CITY, OK

DESCRIPTION
REGAL/ CELEBRITY WINDLOAD SERIES

TITLE
WINDLOAD CONSTRUCTION DETAILS

DWG. NO. RC–FWL7–1607 | SHT. 1 OF 2 | REV. 1

NOTES: THIS DRAWING AND / OR TECHNICAL INFORMATION ON THIS SHEET IS THE PROPERTY OF MID–AMERICA DOOR COMPANY AND IS LOANED IN CONFIDENCE FOR ENGINEERING AND MUTUAL ASSISTANCE PURPOSES ONLY, AND MAY NOT BE REPRODUCED OR USED TO MANUFACTURE ANYTHING DISCLOSED HEREON WITHOUT THE EXPRESSED PERMISSION OF MID–AMERICA DOOR COMPANY.

NOTES:

1. STRUTS ARE NOT MORE THAN 1 1/2" SHORTER THAN SECTION.
2. USE IN CONJUNCTION WITH INSTALLATION INSTRUCTIONS. WHERE THE DRAWING CONFLICTS WITH OTHER INSTALLATION INSTRUCTIONS, THIS DRAWING GOVERNS.

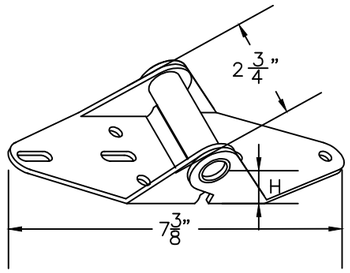

P/N 20604 (#1 HINGE)

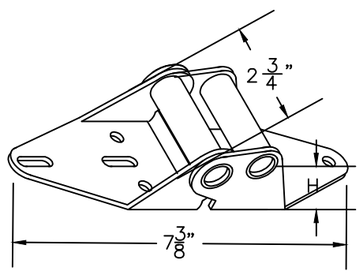

END HINGE

HINGE #	GAGE #	"H"	PART NUMBER
1	14	3/4"	20602
2	14	1"	20606
3	14	1 1/4"	20610
4	14	1 1/2"	20614
5	14	1 3/4"	20616
6	13	2"	20618

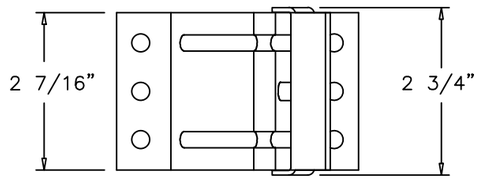

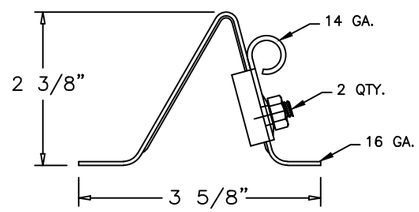

P/N 20356 TOP FIXTURE

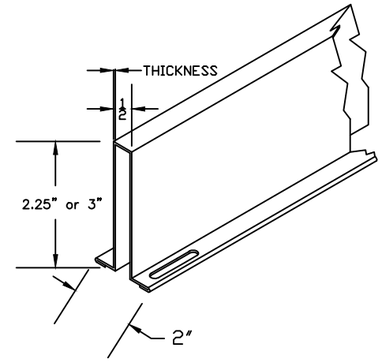

STRUTS

THICKNESS OF STRUTS ARE AS STATED BELOW	
2.25" 22 GAUGE 33 KSI MINIMUM YIELD	.028" MIN.
3" 20 GAUGE 50 KSI MINIMUM YIELD	.036" MIN.

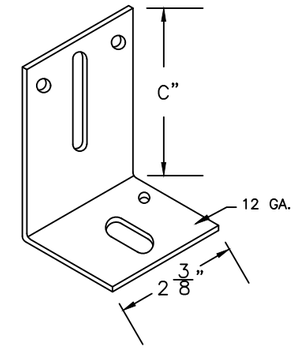

TRACK BRACKET

BRACKET #	"C"	PART NUMBER
4	3"	20368
5	3 1/4"	20370
6	3 1/2"	20372
7	3 3/4"	20374
8	4"	20376
9	4 3/4"	20378

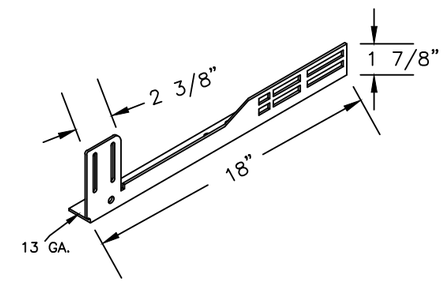

20366 &7 FLAG BRACKET

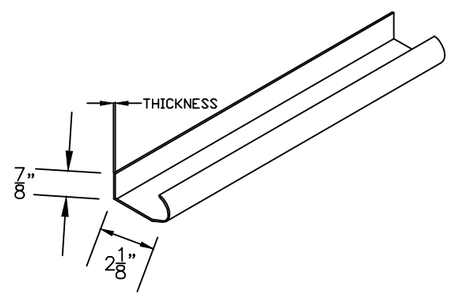

WINDLOAD TRACK

THICKNESS OF TRACK IS AS STATED BELOW	
VERTICAL TRACK IS MIN. 16 GA.	.058" MIN
HORIZONTAL TRACK IS MIN. 16 GA.	.058" MIN

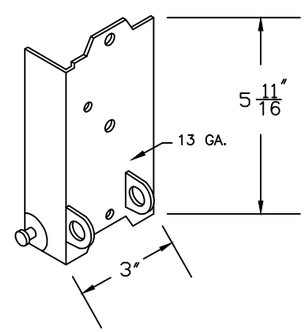

P/N 20334&5 BOTTOM BRKT.

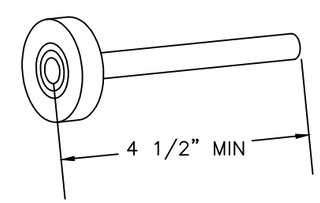

P/N 20812
SHORT STEM 11 BALL NYLON COATED STEEL ROLLER

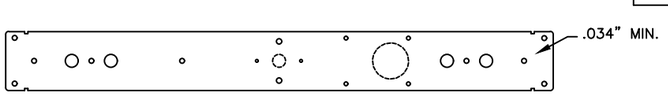

P/N 10455 & 10465 (21" & 18") CENTER STILE

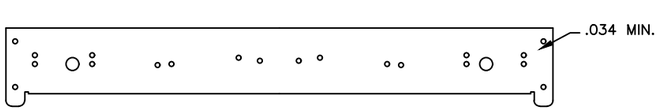

P/N 10450 & 10460 (21" & 18") END STILE

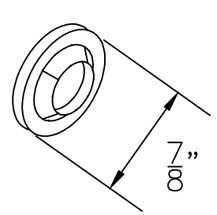

P/N 20239 PUSH NUT

JOHN E. SCATES LICENSE No. 51737 STATE OF FLORIDA PROFESSIONAL ENGINEER

PROFESSIONAL ENGINEER'S SEAL PROVIDED ONLY FOR VERIFICATION OF WINDLOAD CONSTRUCTION DETAILS

JOHN E. SCATES, P.E.
2560 King Arthur Blvd #124-24
Lewisville, TX 75056
FL. P.E. # 51737
TX. P.E. # 56308, F-2203

Rev.	By	Date	Description	Rev.	By	Date	Description
0	BR	3/16/18	NEW DRAWING	8			
1	BR	3/16/18	updated for fbc	9			
2				10			
3				11			
4				12			
5				13			
6				14			
7				15			

SCALE	N.T.S.	DATE
DRAWN BY	BJR	11-1-17
INITIAL CHK.	BJR	"
FINAL CHK.	JAR	"
ENGR.		"
APPR. BY	JAR	"

Mid-America Door Company PONCA CITY, OK

DESCRIPTION: WINDLOAD SERIES HARDWARE

TITLE	DWG. NO.	SHT.	REV.
WINDLOAD CONSTRUCTION DETAILS	RC-FWL7-1607	2 OF 2	1

NOTES: THIS DRAWING AND / OR TECHNICAL INFORMATION ON THIS SHEET IS THE PROPERTY OF MID-AMERICA DOOR COMPANY AND IS LOANED IN CONFIDENCE FOR ENGINEERING AND MUTUAL ASSISTANCE PURPOSES ONLY, AND MAY NOT BE REPRODUCED OR USED TO MANUFACTURE ANYTHING DISCLOSED HEREON WITHOUT THE EXPRESSED PERMISSION OF MID-AMERICA DOOR COMPANY.