ENGINEERING EXPRESS®

ENGINEERINGEXPRESS.COM | (954) 354-0660
POSTAL ADDRESS:
2234 NORTH FEDERAL HWY #7664
BOCA RATON, FL 33431

Performance Evaluation

Florida Statewide Product Approval (FSA) # FL 21854.1
Engineering Express Project # 23-64738
THIS DOCUMENT CONTAINS (5) PAGES.

EVALUATION SUBJECT: **AMERICAN STANDARD/AMERISTAR i2 PACKAGED UNITS** FL # 21854.1

REPORT HOLDER:
TRANE TECHNOLOGIES
6200 TROUP HIGHWAY
TYLER, TX 75707, USA
(903) 730-4602
AMERICANSTANDARDAIR.COM
AMERISTARHVAC.COM

American Standard HEATING & AIR CONDITIONING

AMERISTAR® BY AMERICAN STANDARD HEATING & AIR

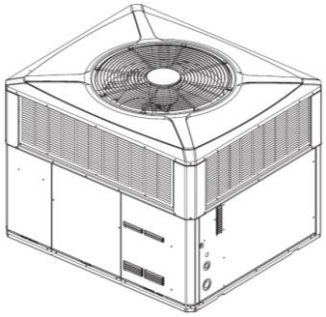

SCOPE OF EVALUATION (compliance with the following codes):

THIS IS A STRUCTURAL (WIND) PERFORMANCE EVALUATION ONLY. NO ELECTRICAL OR TEMPERATURE PERFORMANCE RATINGS OR CERTIFICATIONS ARE OFFERED OR IMPLIED HEREIN.
UNDER NO CIRCUMSTANCE DOES THIS PERFORMANCE EVALUATION GUARANTEE, IMPLY, OR STATE PERFORMANCE OF THE UNIT IS MAINTAINED DURING OR AFTER A DESIGN EVENT.

This Performance Evaluation is being issued in accordance with the requirements of the **Florida Building Code Eighth Edition (2023)** per ASCE 7, FBC Building Ch. 16, FBC Building Sections 104.11 & 1522.2, FBC Existing Building Sections 707.1 & 707.2, FBC Mechanical 301.15, FBC Residential M1202.1 & M1301.1, and FS 471.025. The product noted in this performance evaluation has been tested and/or evaluated as summarized herein.

SUBSTANTIATING DATA:
• Product Evaluation Documents: Test Reports
Substantiating documentation has been submitted to provide this product evaluation and is summarized in the sections below.

- **Test Report:** 0125.01-16 (American Test Lab of South FL)

• Structural Engineering Calculations
Structural engineering calculations have been prepared which evaluate the product based on comparative and/or rational analysis to qualify the following design criteria:

- Max. allowable lateral & uplift wind pressures certified herein
- Max. allowable sliding forces, uplift forces, & overturning moments (see Unit Reactions from Wind Guide on last page)
- Tie-down configuration and anchor capacity for concrete, aluminum, and steel host substrates (host by others).
- Unit panel wind pressure connection integrity

Calculation summary is included in this product evaluation and appears herein.

LIMITATIONS & CONDITIONS OF USE:
Use of the product(s) listed herein shall be in strict accordance with this product evaluation as noted herein and manufacturer-provided model specifications. Installation shall conform to the minimum standards stated in the referenced building code(s) in addition to the specifications and limitations stated herein. See herein for complete limitations & conditions of use.

OPTIONS:
This evaluation is valid for the models described herein. The critical unit designs have been determined and used in this evaluation. Any structural changes outside of the design as described herein would void this certification.

UNIT CASING MATERIALS:
20ga galv. sheet steel ES3101001. Removable Top and side covers secured with #12 TEK Screws (6 min ea.). Contact Report Holder for further unit construction information.

TERMINOLOGY:
See herein for definitions of terms and abbreviations used in this evaluation.

NOTE: THE GRAPHICAL DEPICTIONS IN THIS EVALUATION ARE FOR ILLUSTRATIVE PURPOSES ONLY AND MAY DIFFER IN APPEARANCE.

STRUCTURAL PERFORMANCE:
Models referenced herein are subject to the following design limitations:

Maximum Rated Wind Pressures*:
± 200 psf Lateral, 100 psf Uplift

- Required design wind pressures shall be determined according to the guide provided in the Appendix (see last page of this document) or on a site-specific basis in accordance with ASCE 7 and applicable sections of the building code(s) being referenced in accordance with ASD methodology.
- Required design pressures shall be less than or equal to the maximum pressures listed herein.
- *Maximum Rated Wind Pressures indicate the maximum pressures that all units listed herein are approved for. Valid for at-grade and rooftop applications. See limitations herein.
- Valid for use inside and outside the High-Velocity Hurricane Zone (HVHZ).
- Site-specific wind analysis may produce alternate limitations provided maximum rated wind pressures stated herein are not exceeded.

VISIT ECALC.IO/TRANE
FOR MORE INFORMATION AND DEVIATIONS TO THIS EVALUATION OR SCAN THE QR CODE TO THE RIGHT >

Engineer Signature & Seal:

FRANK L. BENNARDO LICENSE No 0046549 STATE OF FLORIDA PROFESSIONAL ENGINEER

Digitally signed by Frank Bennardo
Date: 2024.08.28 16:37:01 -04'00'

August 28, 2024

Frank Bennardo, P.E.
ENGINEERING EXPRESS®
FL PE #0046549 FLCA #9885

MODEL SUMMARY, DIMENSION & NOTES

TABLE 1: Qualified Tested Unit Construction Plastic / Metal Cabinetry				
Unit Model	Operating Dimensions w/screw heads			Operating Weight (lbs)
	Width (in)	Length (in)	Height (in)	
4DCY4024C1060AA	43.13	50.63	35.38	385
4WCZ6048B1000AA	46.06	60.31	41.38	479
4WCY4042B1000AA	46.06	60.31	37.38	479
4WCC4060A1000AA	44.31	58.56	41.38	490

TESTED UNIT LIMITATIONS

1. The unit models listed above were tested and designed as worst case configurations of model units listed in *Evaluation Model Series Matrix,* remaining unit models are certified by this approval as long as they have identical construction as those listed above and are of equal or lesser dimensions (length, width, height).
2. Dimensions shown are measured from outermost points of unit, including screw heads.
3. Curb clips shall be as close as possible from the given locations; installers shall verify any interference between clip attachment and internal components of the unit and move clip within the tolerance allowed.

TEST REPORTS UTILIZED

Design and certification of the unit cabinetry are approved through the *American Test Lab of South Florida* Report #: 0125.01-16. Tested according to ASTM E330-05 and TAS 202-94.

Note: The comparative analysis method was utilized for comparative materials & fabrication methodology.

EVALUATION MODEL SERIES MATRIX

4	DCY	4	24,30,36,42,48,60
4,5	DCZ	5	24,30,36,42,48,60
4	DCZ	6	36, 48,60
4	TCC	3	36,48,60
4,5	TCC	4	24,30,36,42,48,60
4	TCX	3	36,48,60
4	TCY	4	24,30,36,42,48,60
4	TCY	5	24,30,36,42,48,60
4	WCC	3	24,30,36,42,48,60
4,5	WCC	4	24,30,36,42,48,60
4	WCY	4	24,30,36,42,48,60
4	WCY	5	24,30,36,42,48,60
4,5	WCZ	5	24,30,36,42,48,60
4	WCZ	6	24,36,48,60
4	YCC	3	36,48,60
4,5	YCC	4	24,30,36,42,48,60
4	YCX	3	36,48,60
4	YCY	4	24,30,36,42,48,60
4	YCY	5	24,30,36,42,48,60
4,5	YCZ	5	24,30,36,42,48,60
4	YCZ	6	24,36,48,60
A5	PA	3	24,30,36,42,48,60
A5	PG	3	24,30,36,42,48,60
A5	PH	3	24,30,36,42,48,60

UNIT VIEWS & ELEVATIONS:

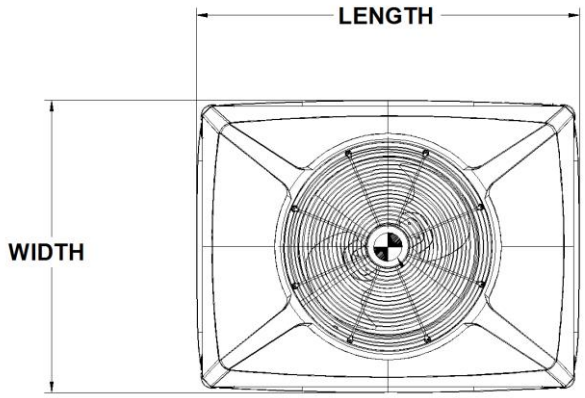

TOP VIEW

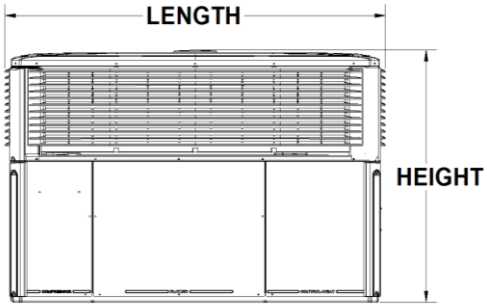

FRONT VIEW

CURB CLIP LOCATIONS:

(see note 3)

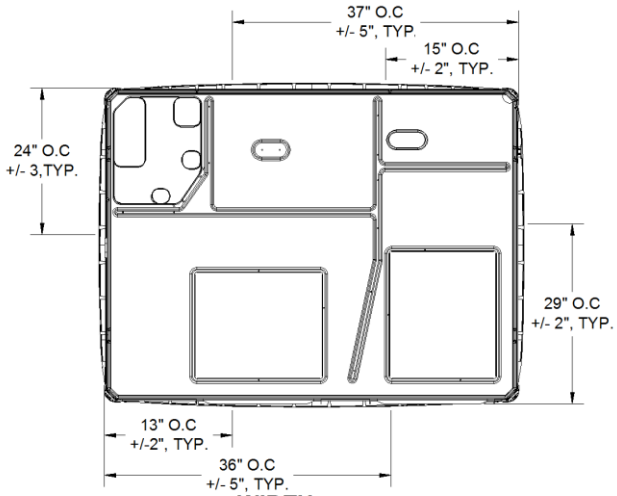

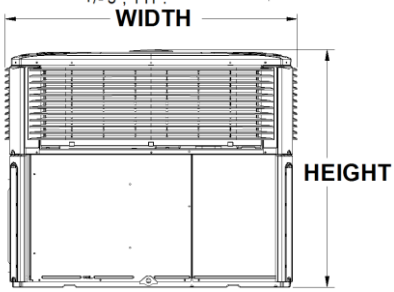

SIDE VIEW

Note: 4DCY illustration selected for dimensional purposes.

PRODUCT INSTALLATION

BAYEXMK003AA CLIP - G90 Steel 1 7/8" TALL
Fasten to cabinet using:
(3) #12-24 X 3/4" SAE Gr. 5 unit screws ea. clip:
Use existing #12 screw locations & create additional anchor points at equal spacing as permissible to like material.
SAE GR5 ASTM-A449 washer to secure anchor to supporting structure. Spaced clips quantity equally at each side.

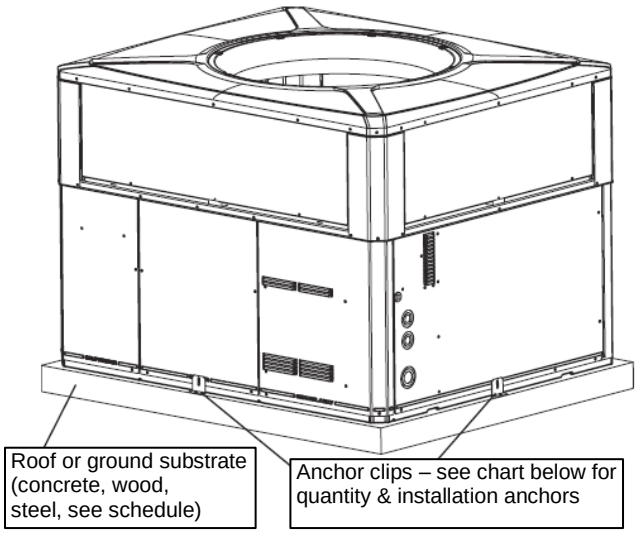

ANCHOR SCHEDULE TO HOST STRUCTURE BY OTHERS						
Max. ASD Wind Pressures Lateral (Uplift)	Concrete Host		Steel Host		Wood Host	
	Anchor Clip Qty.	Anchor Type	Anchor Clip Qty.	Anchor Type	Anchor Clip Qty.	Anchor Type
Ground	2L-1S	A	2L-2S	C	2L-1S	D
± 86 psf (68 psf)	3L-1S	B	N/A	N/A	4L-2S	D
± 97 psf (77 psf)	5L-1S	B	N/A	N/A	5L-2S	D
± 105 psf (87 psf)	6L-1S	B	N/A	N/A	6L-2S	D

# of Anchor Clips Designation: #L = # of clips ea. long side, #S = # of clips ea. short side

Example: 2L-1S = (2) clips ea. long side & (1) clip ea. short side, (6) clips total.

N/A = not applicable for the wind pressure & host structure configuration.

Anchor Type to Host Structure

A: 1/4" Ø ITW Tapcon with 2.5" min. embed, 3" min. E.D. to 3 ksi min. concrete.

B: 5/16" Ø ITW Tapcon with 2.5" min. embed, 3" min. E.D. to 3 ksi min. concrete.

C: 1/4" Ø Wood Lag Screw with 1.5" min. embed, 3/4" min. E.D. to G = 0.55 min. wood.

D: 1/4-20 SAE Gr. 2 min. or SS SMS to 3/16" min. thick, Gr. 50 min. steel, 3/4" min. E.D.

CURB CLIP SCHEDULE

For all installations (ground and roof), use (2) curb clips per long side and (1) curb clip per short side, (6) curb clips total per unit installation, typ.

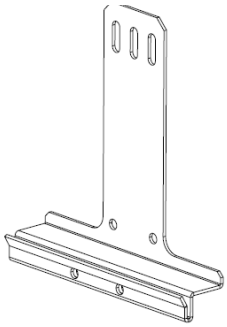

BAYEXMK002B Utility Curb Clip:
5.57" neck, 2.05" wide, 6.00" base width, 16ga galv. sheet steel ES3101001

CURB MOUNT APPLICATIONS

Note: Design & installation of curb to host by others per site specific conditions

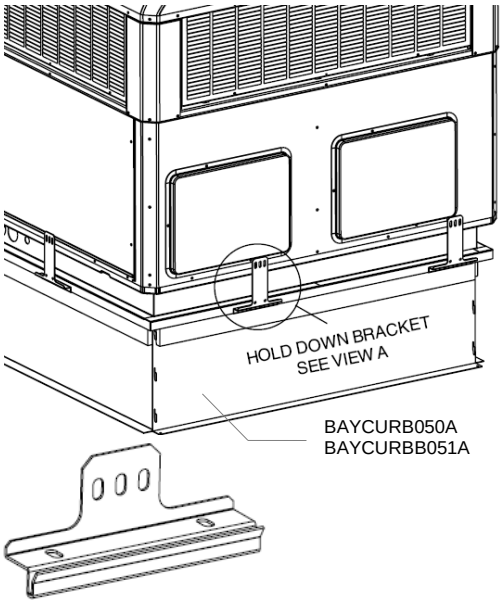

BAYEXMK001A Perimeter or adaptor Curb Clip: 1.63" neck, 2.05" wide, 6.00" base width, 16ga galv. sheet steel ES3101001

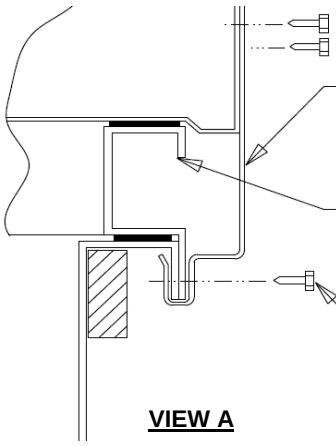

VIEW A

TERMINOLOGY, CONTINUED

The following abbreviations may appear in this report: "Addtl." for "additional", "AHJ" for "Authority Having Jurisdiction", "alum" for "aluminum", "ASCE" for "American Society of Civil Engineers", "ASD" for "Allowable Stress Design", "ASTM" for "American Society for Testing and Materials", "EA." for "each", "E.D." for edge distance", "EDDS" for "extra deep drawing steel", "e.g." for "*exempli gratia*" or "for example", "equiv." for "equivalent", "FBC" for "Florida Building Code", "FEA" for "Finite Element Analysis", "FLCA" for "Florida Certificate of Authorization", "FS" for "Florida Statutes", "Fu" for "ultimate tensile strength" or "ultimate tensile stress", "Fy" for "yield strength" or "yield stress" "GA" for "gauge", "GR." or "Gr." for "grade", "HVAC" for "heating, ventilation, and air conditioning", "HVHZ" for "High-Velocity Hurricane Zone", "i.e. " for "*id est*" or "in other words", "in" for "inch", "lb" for "pound (force)", "max." for "maximum", "min." for "minimum", "mm" for "millimeter", "NTS" for "not to scale", "O.C. " for "on center", "OD" for "outer diameter", "pcf" for "pounds (force) per cubic foot", "PE" for "Professional Engineer", "qty" for "quantity", "SAE" for "Society of Automotive Engineering", "SMS" for "sheet metal screws", "SS" for "stainless steel", "TER" for "Technical Evaluation Report", "typ." for "typical", "ult" for "ultimate loads", "U.N.O." for "unless noted otherwise", "UTS" for "ultimate tensile strength" or "ultimate tensile stress", "WLL" for "working load limit", "w/o" for "without", "YS" for "yield strength" or "yield stress", "#" for "number", "&" for "and", and "Ø" for "diameter". Please visit ecalc.io/glossary for additional abbreviation clarifications.

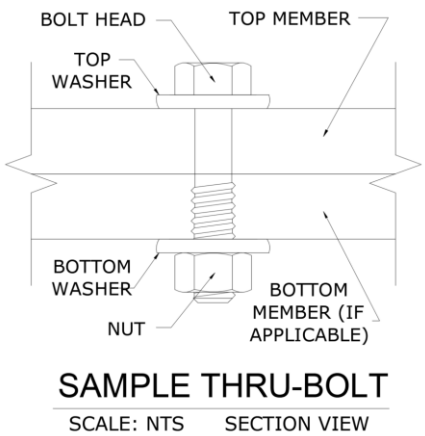

Note: The term "Thru-Bolt" or through bolt, if used herein, refers to a bolt passing through the member(s) in contact and is fastened by a nut at the end opposite the screw head. Nut shall be equivalent to or exceed the strength of the bolt U.N.O. Nut shall be sized to accommodate the same nominal diameter as the bolt U.N.O. See diagram above-right for a sample thru-bolt configuration.

Note: For instances herein which list material specifications as *"[material type] or stronger":*
U.N.O. herein, the term "stronger" refers to a material with a UTS value equal to or greater than the UTS value of the stated material type. Consult appropriate literature for established material UTS values.

Note: Equivalent steel gauge thicknesses as used in this evaluation, U.N.O., are as follows:
22 GA (.030"), 20 GA (.036"), 18 GA (.048"), 16 GA (.060"), 14 GA (.075"), 12 GA (.098").

LIMITATIONS & CONDITIONS OF USE, CONTINUED

Use of this product shall be in strict accordance with this product evaluation as noted herein. The supporting host structure shall be designed to resist all superimposed loads as determined by others on a site-specific basis as may be required by the authority having jurisdiction. Host structure conditions which are not accounted for in this product's respective anchor schedule shall be designed for on a site-specific basis by a registered Professional Engineer. No evaluation is offered for the host supporting structure by use of this document. Adjustment factors noted herein and the applicable building codes must be considered, where applicable. Product components shall be of the material(s) specified in the manufacturer-provided product specifications. All supporting components which are permanently installed shall be protected against corrosion, contamination, and other such damage at all times. All fasteners and anchors shall be installed in accordance with the applicable provisions specified herein in addition to the anchor/fastener manufacturers' published installation instructions. Fasteners must penetrate the supporting members such that the full length of the threaded portion is embedded within the main member. This evaluation does not offer any evaluation to meet large missile impact debris requirements under any circumstances.

All of the wind-resisting exterior panels (with accompanying retrofits) individually meet or exceed their capacity to resist the design wind loads as stated in the calculations as required by the codes and standards stated herein. Due to the indeterminate nature of these units, distortion, deflection, and material deformation cannot be accurately evaluated, but with the diaphragm action of external components and internal stiffeners, the base unit (with accompanying retrofits stated herein as applicable) has the capacity to withstand the design wind loads without detaching from the unit and becoming flying debris.

Survivability: This performance evaluation is valid for a newly installed unit and do not include certification of the product beyond a design event or if impacted by any debris. Inspections shall be implemented annually by the end user and after every named storm. All fasteners and cabinet components are to be verified, and all damaged, loose, corroded and/or broken fasteners and cabinet components shall be replaced to ensure structural integrity against hurricane wind forces. Contact this office for any reevaluation needs or as designated by the Authority Having Jurisdiction.

Durability: Components or component assemblies shall not deteriorate, crack, fail, or lose functionality due to galvanic corrosion or weathering. All supporting components which are permanently installed shall be protected against corrosion, contamination, and other such damage at all times. Each component or component assembly shall be supported and oriented in its intended installation position. All exposed plastic components shall be certified to resist sunlight exposure as specified by ASTM B117, or ASTM G155 in Broward or Miami Dade counties.

Extent of Certification: Certification pertains to the overall structural integrity of the unit components listed within the evaluation as required by code, subject to the limitations and criteria stated herein. Operability during or after a design event is not included in this certification. Water infiltration is outside the bounds of this certification. No other certifications are intended other than as described herein. This evaluation alone does not offer any evaluation for large missile impact debris or cyclic wind requirements unless specifically stated herein.

Proj. #	Remarks	By	Checked	Date	Proj. #	Remarks	By	Checked	Date
20-28659	Prev. Submittal (R5)	EPR	RWN	12/16/22	23-64738	Add new models	MARH	EPR	08/27/2024
23-64738	2023 FBC Update	EPR	RWN	10/23/23					

APPENDIX A: DESIGN WIND PRESSURE GUIDE

Max. Ult. Wind Speed (V_{ult})	Max. MRH (Roof Height)	Exposure Category	Required Design Wind Pressures (ASD)	
			Lateral Pressure	Uplift Pressure
140 mph	At-Grade (0 ft)	C	± 26 psf	0* psf
		D	± 31 psf	0* psf
	100 ft	C	± 63 psf	50 psf
		D	± 71 psf	56 psf
	200 ft	C	± 72 psf	57 psf
		D	± 80 psf	63 psf
175 mph	At-Grade (0 ft)	C	± 40 psf	0* psf
		D	± 49 psf	0* psf
	100 ft	C	± 98 psf	77 psf
		D	± 111 psf	87 psf
	200 ft	C	± 113 psf	89 psf
		D	± 124 psf	98 psf
186 mph	At-Grade (0 ft)	C	± 46 psf	0* psf
		D	± 54 psf	0* psf
	100 ft	C	± 111 psf	87 psf
		D	± 125 psf	99 psf
	200 ft	C	± 127 psf	100 psf
		~~D~~	~~± 140 psf~~	~~111 psf~~

~~100 psf~~ Note: Any table values with the format shown left, if present, indicate design wind pressures and site conditions that are **not approved for use** by this evaluation. Seek additional engineering or contact this firm for design solutions.

DIRECTIVE: This design pressure guide is for reference only and shall be approved for use by the Authority Having Jurisdiction (AHJ). If the design pressures listed in this guide are not used, required design pressures shall be calculated separately. For site-specific scenarios classified as Exposure Category B, the required design pressures stated for Exposure Category C in the above guide shall be used or design pressures shall be calculated separately. For heights and parameters beyond the parameters listed in this guide, visit our Online Calculator via the website link (https://ecalc.io/forces) or QR Code below, or obtain calculations separately by others.

The required ASD design pressures listed in this guide were calculated per the table's listed corresponding site conditions. The project design professional or permitting contractor shall verify that the site-specific conditions are equal to or less than the approved design parameters listed in the guide. Per the note below table: any values shown as "~~XX psf~~", indicate wind pressures and corresponding site conditions that are **not valid for use** with this evaluation (exceeds the max. rated pressures).

*Note: Per the codes and standards referenced herein, uplift is not required for mechanical equipment at-grade. If uplift at-grade is required by the AHJ, contact this firm for a site-specific evaluation.

At-Grade (0 ft MRH) Required Design Pressures:

- ASCE 7 "Design Wind Loads: Other Structures"
- Structure Shape = Square, flat terrain
- Height of structure (unit + stand or curb, if used) = 6 ft max.
- Width of unit = 1 ft min., Depth of unit = 11 in min.

Rooftop (>15 ft MRH) Required Design Pressures:

- ASCE 7 "Design Wind Loads: Other Structures: Rooftop Structures and Equipment for Buildings"
- Structure Shape = Square, flat terrain
- z = up to 7 ft, where z = height of stand or curb + ½ unit height
- Lateral GC_f = 1.90; Uplift GC_f = 1.50

VISIT ECALC.IO/FORCES

FOR DESIGN AID CALCULATORS AND RESOURCES RELATED TO THIS EVALUATION & GUIDES HEREIN, OR SCAN THE QR CODE RIGHT >

UNIT REACTIONS FROM WIND GUIDE

DIRECTIVE: This guide is intended for use by a design professional. Design parameters shall abide all specifications and limitations stated in this evaluation. Design professional shall consider all forces, including seismic and snow loads, per the governing building code. Unit reactions obtained from this guide shall be verified by a registered Professional Engineer. Reactions are applicable for unit-to-host connections only. Sample calculations are provided below.

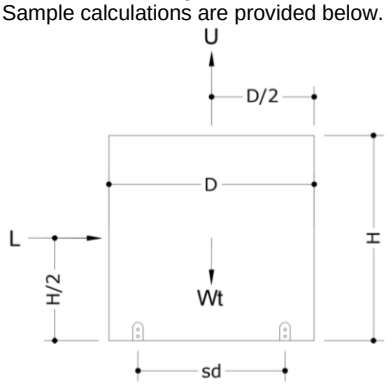

Design Parameters:

- Lateral Wind Pressure, P_lat
- Unit Height, H
- Unit Width, W
- Support Spacing across Depth, sd
- Uplift Wind Pressure, P_up
- Unit Depth, D
- Unit Weight, Wt
- Support Spacing across Width, sw

Unit Reaction Equations:

Long Side (Width x Height):

- Sliding Force, L = P_lat x W x H
- Uplift Force, U = P_up x W x D
- Total Tension per Long Side =
(L x H/2 + U x sd/2 – Wt x 0.6 x sd/2) / sd

Short Side (Depth x Height):

- Sliding Force, L = P_lat x D x H
- Uplift Force, U = P_up x W x D
- Total Tension per Short Side =
(L x H/2 + U x sw/2 – Wt x 0.6 x sw/2) / sw

Example: A (48" W x 36" D x 42" H), 250 lb net weight unit at wind pressures of 120 psf lateral and 95 psf uplift, on a 24" wide roof stand, shall have the following unit reactions:

Long Side (Width x Height):

1. Sliding Force, L = P_lat x W x H
   = (120 psf) x (48 in) x (42 in) x (1 in^2 / 144 ft^2) = **1680 lb**
2. Uplift Force, U = P_up x W x D
   = (95 psf) x (48 in) x (36 in) x (1 in^2 / 144 ft^2) **= 1140 lb**
3. Total Tension per Long Side =
   = (L x H/2 + U x sd/2 – Wt x 0.6 x sd/2) / sd
   = ((1680 lb x 42/2 in) + (1140 lb x 24/2 in) – (250 lb x 0.6 x 24/2 in)) / 24 in **= 1965 lb**

Short Side (Depth x Height):

1. Sliding Force, L = P_lat x D x H
   = (120 psf) x (36 in) x (42 in) x (1 in^2 / 144 ft^2) **= 1260 lb**
2. Uplift Force, U = P_up x W x D
   = (95 psf) x (48 in) x (36 in) x (1 in^2 / 144 ft^2) **= 1140 lb**
3. Total Tension per Short Side =
   = (L x H/2 + U x sw/2 – Wt x 0.6 x sw/2) / sw
   = ((1260 lb x 42/2 in) + (1140 lb x 48/2 in) – (250 lb x 0.6 x 48/2 in)) / 48 in **= 1046 lb**

IN ALL CONDITIONS IT IS THE RESPONSIBILITY OF THE PERMIT HOLDER TO ENSURE THE HOST STRUCTURE IS CAPABLE OF WITHSTANDING THE RATED GRAVITY, LATERAL, AND UPLIFT FORCES BY SITE-SPECIFIC DESIGN. NO WARRANTY OF ANY KIND, EXPRESSED OR IMPLIED, IS OFFERED BY ENGINEERING EXPRESS AS TO THE INTEGRITY OF THE HOST STRUCTURE TO CARRY DESIGN FORCE LOADS INCURRED BY THIS UNIT.