SLIDING GLASS DOOR - NON-IMPACT

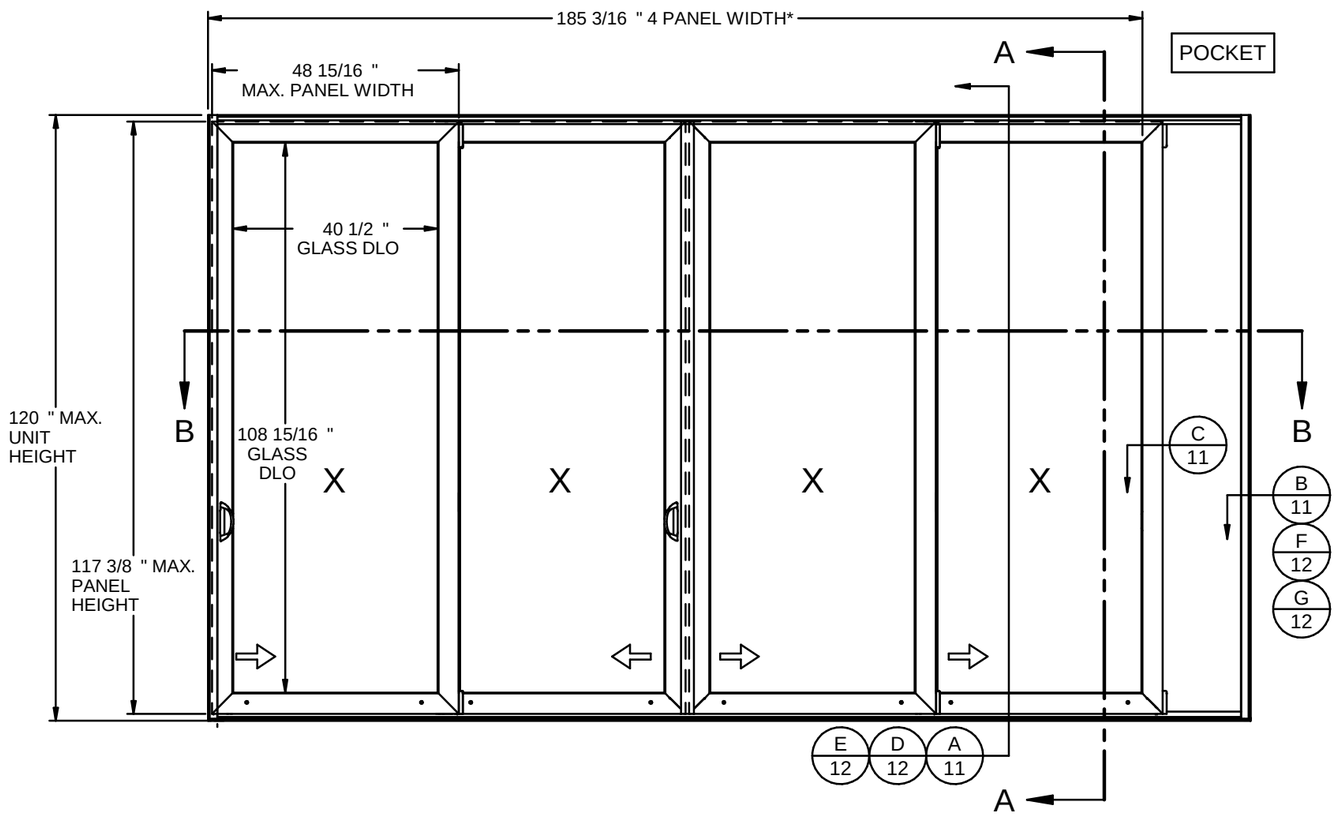

GENERAL NOTES:

1. THE PRODUCT SHOWN HEREIN IS DESIGNED AND MANUFACTURED TO COMPLY WITH THE FLORIDA BUILDING CODE (FBC), CURRENT EDITION AND IS RATED FOR USE IN THE HIGH VELOCITY HURRICANE ZONE (HVHZ).

2. GLAZING OPTIONS: (SEE SHEET 4)

3. APPROVED CONFIGURATIONS INCLUDE BUT ARE NOT LIMITED TO:
"XO", "OX", "XX", "OXO", "XXX", "OXXO", "XXXX",
"PX", "PXX", "PXXX", "PXXXX", "PXXP", "PXXXXP", "PXXXXXXP",
"PXXXXXXXXP"
2 TRACK, 3 TRACK, 4 TRACK

4. DESIGN PRESSURE RATING:
-NEGATIVE DESIGN LOADS BASED ON, TESTED PRESSURE AND GLASS TABLES ASTM E-1300.
-POSITIVE DESIGN LOADS BASED ON, TESTED PRESSURE, WATER INFILTRATION TEST PRESSURE AND GLASS TABLES ASTM E-1300.
-DESIGN LOADS ARE BASED ON ALLOWABLE STRESS DESIGN, ASD.

5. ANCHORAGE: THE 33 1/3% STRESS INCREASE HAS NOT BEEN USED IN THE DESIGN OF THIS PRODUCT. SEE SHEETS 10-11 FOR ANCHOR DETAILS. WINDLOAD DURATION FACTOR Cd=1.6 WAS USED FOR WOOD ANCHOR CALCULATIONS.

6. NOT APPROVED FOR IMPACT RESISTANCE. IMPACT PROTECTIVE SYSTEM REQUIRED IN WIND BORNE DEBRIS REGION.

7. ALL FRAMES ARE PROCESSED AND SCREWED TOGETHER. VENTS ARE PROCESSED AND THERMAL WELDED TOGETHER.

8. THE DESIGNATION X AND O STAND FOR THE FOLLOWING:
X = OPERABLE SASH, O = FIXED SASH, P = POCKET/HOOKSTRIP

9. SECTION CALLOUTS APPLY TO ALL CONFIGURATIONS IN A SIMILAR LOCATION.

10. WEEP SLOTS = 1/2" x 1" LOCATED @ BOTH ENDS.

11. INSTALLATION WITH NO SILL RISER IS ALLOWED ONLY WHERE WATER INFILTRATION RESISTANCE IS NOT REQUIRED.

Lucas Turner
2026.09.16
17:10:28
-05'00'

TABLE OF CONTENTS

GENERAL NOTES & ELEVATIONS.....1
DP CHART.....2
SECTION VIEWS.....3
BOM & GLAZING DETAIL.....4
EXTRUSIONS.....5-6
TRACK WIDTHS.....7
ANCHOR SCHEDULE & NOTES.....8
ANCHOR PATTERNS.....9-10
INSTALLATION DETAILS.....11-12

MAX. PANEL SIZE	DESIGN PRESSURE RATING	IMPACT RATING
48-15/16" x 117-3/8"	+/-65 PSF	NONE

*(4) PANELS SHOWN; HVHZ LIMITED TO MAX. (9) PANELS. OUTSIDE HVHZ, UNLIMITED NUMBER OF PANELS IS ALLOWABLE AS LONG AS INDIVIDUAL PANELS DO NOT EXCEED PANEL SIZE AS SHOWN.

CWS
1900 SW 44TH AVE.
OCALA, FLORIDA 34474
WWW.CWS.CC

VMS01

880 PVC SLIDING GLASS DOOR - NON-IMPACT

PROPRIETARY AND CONFIDENTIAL
THE INFORMATION CONTAINED IN THIS DRAWING IS THE SOLE PROPERTY OF CUSTOM WINDOW SYSTEMS, INC. ANY REPRODUCTION IN PART OR AS A WHOLE WITHOUT THE WRITTEN PERMISSION OF CUSTOM WINDOW SYSTEMS, INC IS PROHIBITED.

FLORIDA APPROVAL NO.:
20834

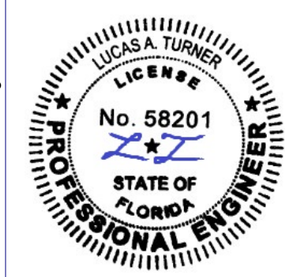

9/16/2026

LUCAS A. TURNER, P.E.
FL PE # 58201
Turner Engineering & Consulting, Inc.
2428 Old Natchez Trc Trl
Camden, TN 38320
PH. 941-380-1574

SHEET DESCRIPTION:
GENERAL NOTES AND ELEVATIONS

DRAWN BY:	DATE:
MCS	9/1/2026
DWG #: CWS-1149	REV.: D
SCALE: 1:30	SHEET 1 OF 12

Chart 1. Design Pressures (psf) with 2060 2.875" Sill Riser								
Panel Width	Door Height (in.)							
	78.000	84.000	90.000	96.000	102.000	108.000	114.000	120.000
30.000	+65 / -97.5	+65 / -97.5	+65 / -97.5	+65 / -97.5	+65 / -97.5	+65 / -97.5	+65 / -97.5	+65 / -96.5
36.000	+65 / -97.5	+65 / -97.5	+65 / -97.5	+65 / -97.5	+65 / -97.5	+65 / -93.8	+65 / -87.9	+65 / -82.8
42.000	+65 / -88.2	+65 / -88.2	+65 / -88.2	+65 / -88.2	+65 / -88.2	+65 / -83.2	+65 / -77.8	+65 / -73.1
48.938	+65 / -65	+65 / -65	+65 / -65	+65 / -65	+65 / -65	+65 / -65	+65 / -65	+65 / -65

Chart 2. Design Pressures (psf) with 2062 4.062" Sill Riser								
Panel Width	Door Height (in.)							
	78.000	84.000	90.000	96.000	102.000	108.000	114.000	120.000
30.000	+80 / -97.5	+80 / -97.5	+80 / -97.5	+80 / -97.5	+80 / -97.5	+80 / -97.5	+80 / -97.5	+80 / -96.5
36.000	+80 / -97.5	+80 / -97.5	+80 / -97.5	+80 / -97.5	+80 / -97.5	+80 / -93.8	+80 / -87.9	+80 / -82.8
42.000	+80 / -88.2	+80 / -88.2	+80 / -88.2	+80 / -88.2	+80 / -88.2	+80 / -83.2	+77.8 / -77.8	+73.1 / -73.1
48.938	+65 / -65	+65 / -65	+65 / -65	+65 / -65	+65 / -65	+65 / -65	+65 / -65	+65 / -65

CWS
1900 SW 44TH AVE.
OCALA, FLORIDA 34474
WWW.CWS.CC

VMS01

880 PVC SLIDING GLASS DOOR - NON-IMPACT

PROPRIETARY AND CONFIDENTIAL
THE INFORMATION CONTAINED IN THIS DRAWING IS THE SOLE PROPERTY OF CUSTOM WINDOW SYSTEMS, INC. ANY REPRODUCTION IN PART OR AS A WHOLE WITHOUT THE WRITTEN PERMISSION OF CUSTOM WINDOW SYSTEMS, INC IS PROHIBITED.

FLORIDA APPROVAL NO.:
20834

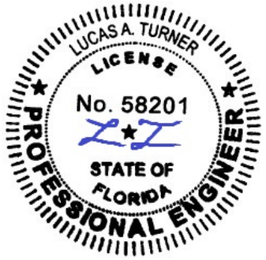

9/16/2026

LUCAS A. TURNER, P.E.
FL PE # 58201
Turner Engineering & Consulting, Inc.
2428 Old Natchez Trc Trl
Camden, TN 38320
PH. 941-380-1574

SHEET DESCRIPTION:
DP CHART

DRAWN BY:	DATE:
MCS	9/1/2026
DWG #: CWS-1149	REV.: D
SCALE: 1:1	SHEET 2 OF 12

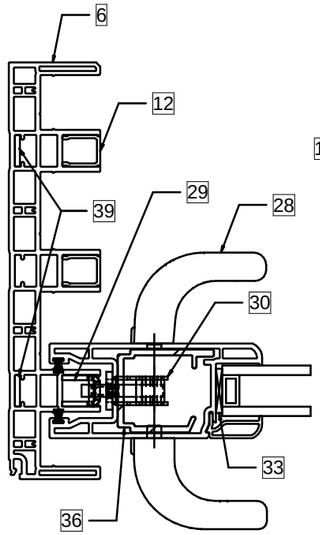

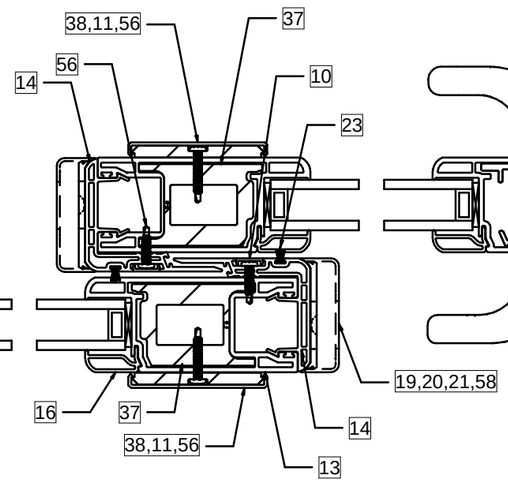

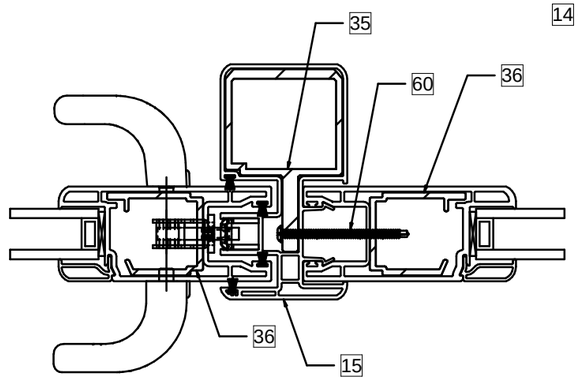

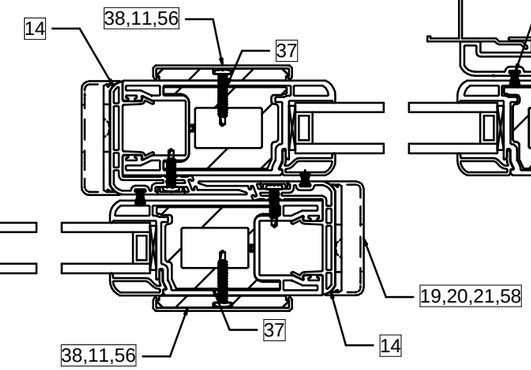

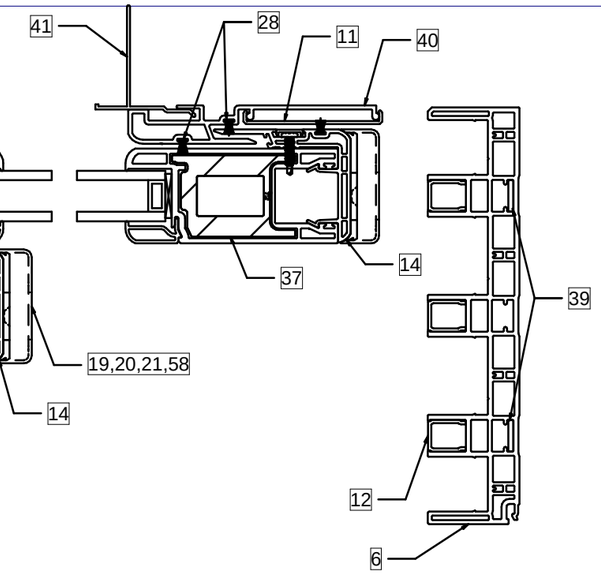

SECTION VIEW B-B

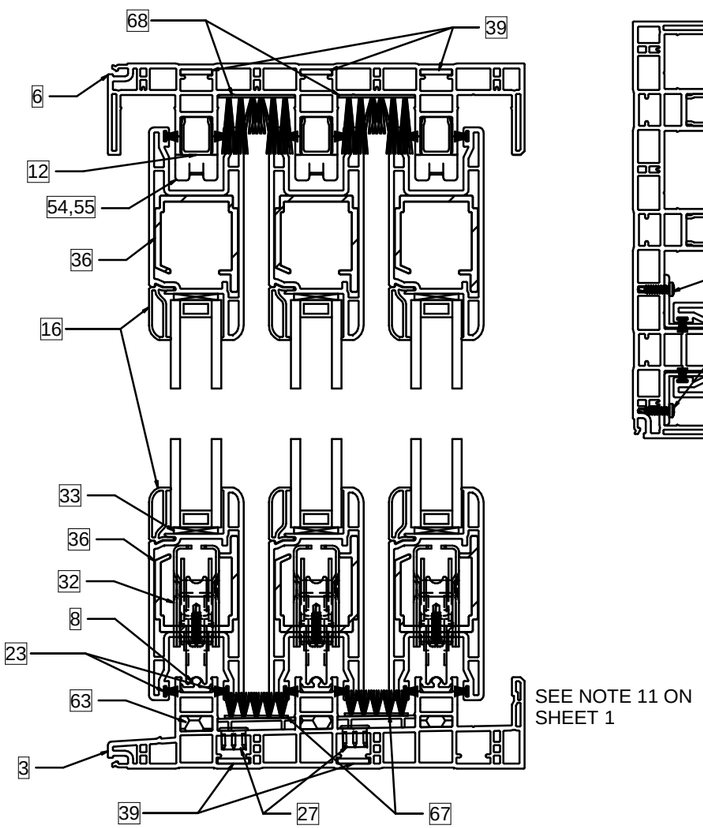

SECTION VIEW A-A
NO SILL RISER

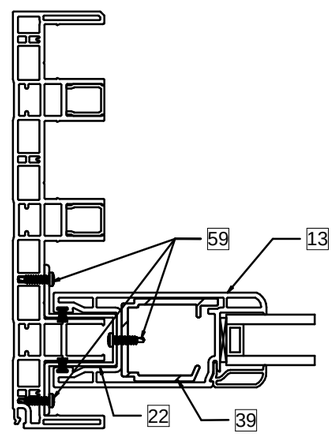

FIXED PANEL
ATTACHMENT

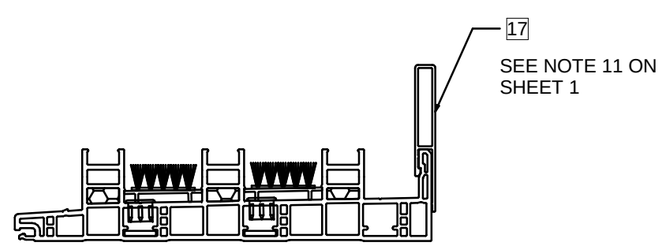

ALTERNATE SILL RISER VIEW
LIMITED TO +65

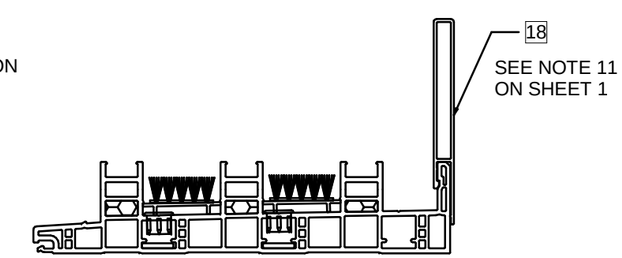

ALTERNATE SILL RISER VIEW
LIMITED TO +80

ITEMS NOT SHOWN FOR CLARITY:
20, 24-26, 31, 55-58, 61-62, 64-66

CWS
1900 SW 44TH AVE.
OCALA, FLORIDA 34474
WWW.CWS.CC

VMS01

880 PVC SLIDING GLASS DOOR - NON-IMPACT

PROPRIETARY AND CONFIDENTIAL
THE INFORMATION CONTAINED IN THIS DRAWING IS THE SOLE PROPERTY OF CUSTOM WINDOW SYSTEMS, INC. ANY REPRODUCTION IN PART OR AS A WHOLE WITHOUT THE WRITTEN PERMISSION OF CUSTOM WINDOW SYSTEMS, INC IS PROHIBITED.

FLORIDA APPROVAL NO.:
20834

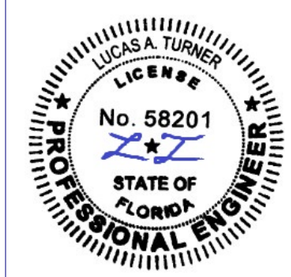

9/16/2026

LUCAS A. TURNER, P.E.
FL PE # 58201
Turner Engineering & Consulting, Inc.
2428 Old Natchez Trc Trl
Camden, TN 38320
PH. 941-380-1574

SHEET DESCRIPTION:
SECTION VIEWS

DRAWN BY:	DATE:
MCS	9/1/2026
DWG #: CWS-1149	REV.: D
SCALE: 1:3	SHEET 3 OF 12

PARTS LIST

ITEM	PART #	DESCRIPTION	MATERIAL
1	GLASS	SEE THIS SHEET	
2	H-6161	2-Track Sill	PVC
3	H-6163	3-Track Sill	PVC
4	H-6165	4-Track Sill	PVC
5	H-6160	2-Track Head/Jamb	PVC
6	H-6162	3-Track Head/Jamb	PVC
7	H-6164	4-Track Head/Jamb	PVC
8	S-2064	Roller Track Insert	Aluminum
9	S-6171	Cover, Sill Track	PVC
10	S-6169	Cover, Interlock	PVC
11	S-6172	Cover, External Reinforcement/P-Hook	PVC
12	S-6175	Track Filler, Frame	PVC
13	H-6166	Panel Stile/Rail	PVC
14	H-6168	Interlock, Snap-On	PVC
15	H-6167	Astragal	PVC
16	H-6170	Glazing Bead, I.G., 1"	PVC
17	H-2060	Sill Riser, 2.906"	Aluminum
18	H-2062	Sill Riser, 4.062"	Aluminum
19	P-5517	KIT, LOWER REINF PLATE (8800 SGD PANEL)	Aluminum
20	P-5558	Support Channel, Bot Rail, Interlock	Aluminum
21	P-5511	Cover, Panel Guide, Interlock	Nylon
22	P-5516	Bracket, Fixed Panel	Aluminum
23	P-3305	Wstp., .187 Back x .270 H FinSeal	
24		Sikaflex 552 or Purfect Glaze "H"	Silicone
25	P-3514	Screw, #10 x 2" Ph Comb Hd	Steel
26	P-3587	Screw, #8 x 1" PH FL TEK - Roller Asm/Mortise Lock	Steel
27	P-5588	Hole Plug, 0.500" Dia.	Nylon
28	P-5536	Handle Set with Thumb Turn	
29	P-3792	Keeper	
30	P-3793	Multi-Point Mortise Lock	
31	P-4250	Screw, #10 x 2.5" PH PN SMS - Keeper	Steel
32	P-5287	Tandem Roller Assy, 2.125" Dia Wheel	
33	P-5531	Setting Block, .09 x 1 x 2	Rubber
34	H-1769	Reinforcement, Interlock	Aluminum
35	H-2068	Reinforcement, Astragal	Aluminum
36	S-1775	Reinforcement, Lock Stile/Rails	Aluminum
37	H-2111	Reinforcement, HD, Interlock	Aluminum
38	S-2071	Reinforcement, External, Interlock	Aluminum
39	S-2069	Frame Insert, Installation Anchors	Aluminum
40	H-2063	P-Hook	Aluminum
41	S-2065	P-Hook Adaptor	Aluminum
42	S-2136	Screen, Astragal	Aluminum
43	H-2135	Screen, 1-Track Head/Jamb	Aluminum
45	S-2134	Screen, 1-Track Sill	Aluminum
46	S-2053	Screen, 2-Track Head	Aluminum
47	S-2054	Screen, 2-Track Jamb	Aluminum
48	S-2055	Screen, 2-Track Sill	Aluminum
49	S-2056	Screen, 3-Track Head	Aluminum
50	S-2057	Screen, 3-Track Jamb	Aluminum
51	S-2058	Screen, 3-Track Sill	Aluminum
52	S-2059	Screen, Snap Cover	Aluminum
54	P-5477	Block, Anti-Lift	Nylon
55	P-5559	Screw, #14 x 4" PH PN SMS	Steel
56	P-3539	#8 x 3/4" Phillips Square SMS	Steel
57	P-5572	#8 x 2.5" PH FH TEK SS, Screw (Sash Guid	Steel
58	P-4962	Screw, #8 x 3" PH FL Tek	Steel
59	P-5565	Screw, #12 x 1 1/2" PH PN SMS	Steel
60	P-3609	Bumper, Panel Stop	Rubber
61	P-4291	Panel Stop Housing	Nylon
62	P-5567	OPEN CELL FOAM, .844 X .500 X 2"	
63	P-5492	Gasket, Frame Assembly, 2-Track	Butyl
64	P-5493	Gasket, Frame Assembly, 3-Track	Butyl
65	P-5494	Gasket, Frame Assembly, 4-Track	Butyl
66	P-4659	Dust Plug, 1-1/4" x 3" x 0.5" (Cut from 3213)	
67	P-4366	Wstp., 1.0W x 1.100 x .700H Dust Plug	
68		Screen, Spline	Rubber
69		Screen, Cloth	

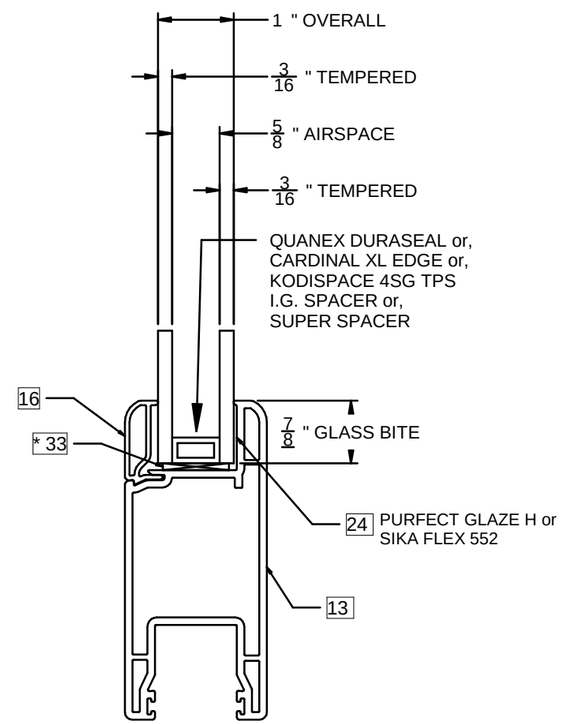

NOTES:
GLASS WHEN TEMPERED AND AS INDICATED IN THIS APPROVAL IS SGCC CERTIFIED TO ANSI Z97.1 AND CPSC 16 CFR 1201, TO BE FIELD VERIFIED BY PERMANENT ETCHING MARK ON EACH GLASS LITE.

* SETTING BLOCKS PER FBC 2411.3.3.1

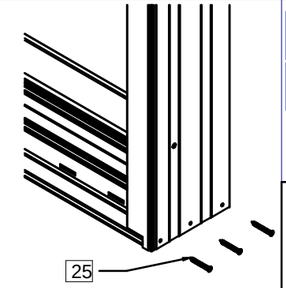

FRAME CORNERS
MECHANICALLY FASTENED
1:8

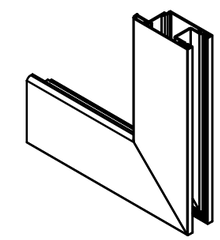

PANEL CORNERS
THERMAL WELD
1:8

CWS
1900 SW 44TH AVE.
OCALA, FLORIDA 34474
WWW.CWS.CC

VMS01

880 PVC SLIDING GLASS DOOR - NON-IMPACT

PROPRIETARY AND CONFIDENTIAL
THE INFORMATION CONTAINED IN THIS DRAWING IS THE SOLE PROPERTY OF CUSTOM WINDOW SYSTEMS, INC. ANY REPRODUCTION IN PART OR AS A WHOLE WITHOUT THE WRITTEN PERMISSION OF CUSTOM WINDOW SYSTEMS, INC IS PROHIBITED.

FLORIDA APPROVAL NO.:
20834

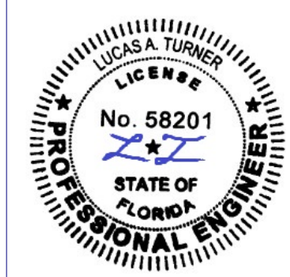

9/16/2026

LUCAS A. TURNER, P.E.
FL PE # 58201
Turner Engineering & Consulting, Inc.
2428 Old Natchez Trc Trl
Camden, TN 38320
PH. 941-380-1574

SHEET DESCRIPTION:
BOM AND GLAZING DETAIL

DRAWN BY:	DATE:
MCS	9/1/2026
DWG #: CWS-1149	REV.: D
SCALE: 1:2	SHEET 4 OF 12

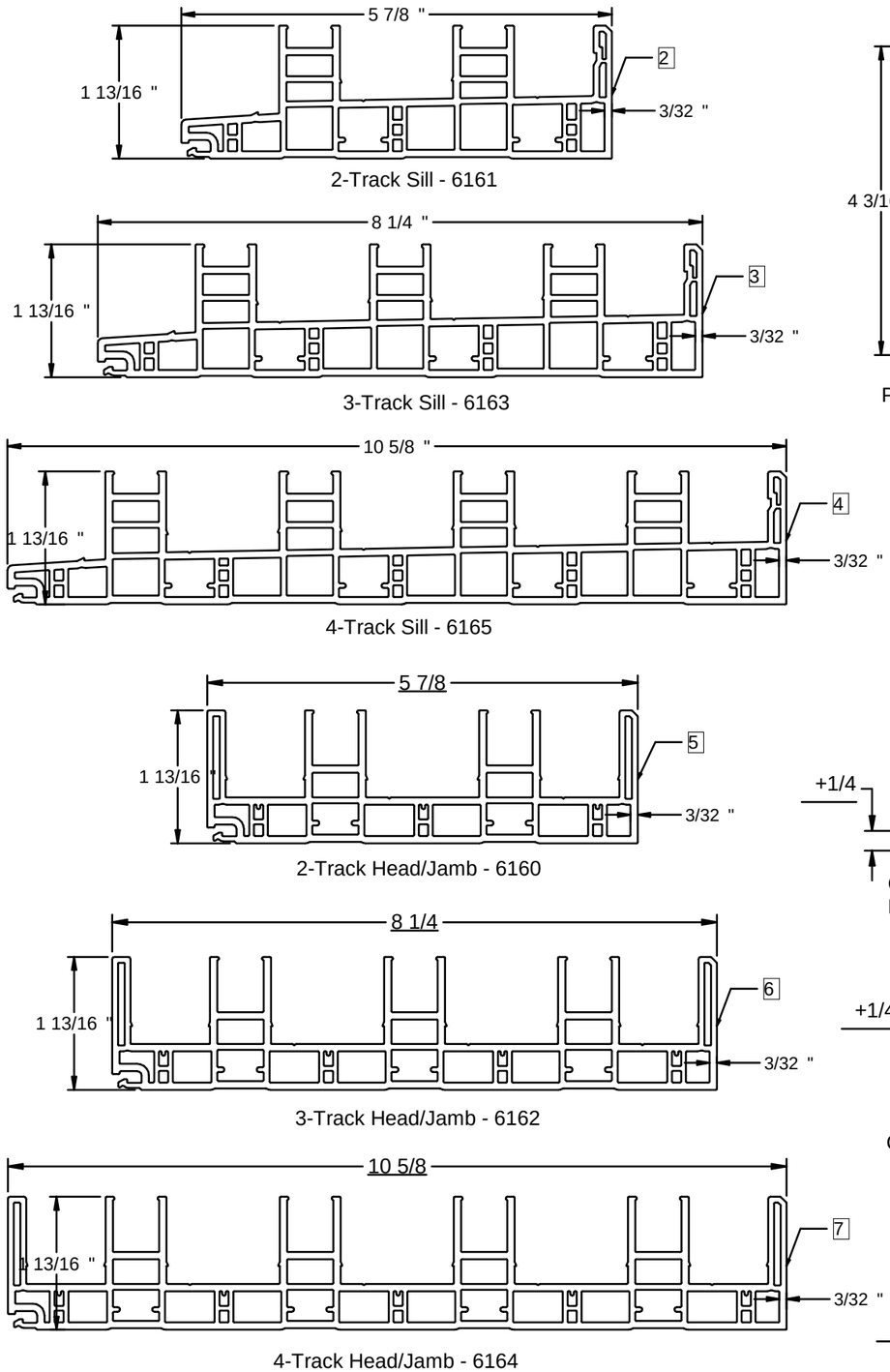

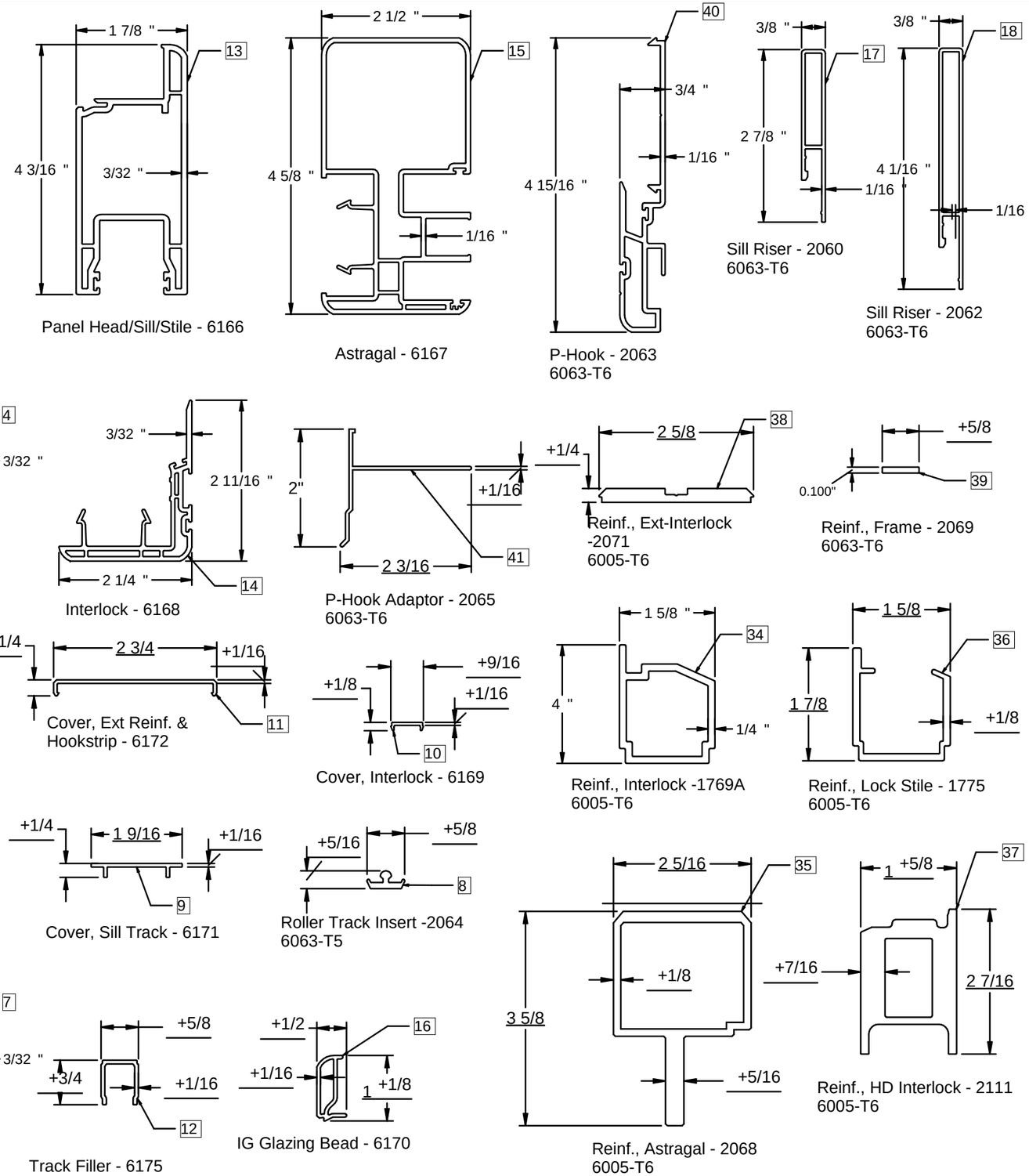

NOTE: ALL EXTRUSIONS ARE RIGID PVC UNLESS OTHERWISE NOTED.

CWS
1900 SW 44TH AVE.
OCALA, FLORIDA 34474
WWW.CWS.CC

VMS01

880 PVC SLIDING GLASS DOOR - NON-IMPACT

PROPRIETARY AND CONFIDENTIAL
THE INFORMATION CONTAINED IN THIS DRAWING IS THE SOLE PROPERTY OF CUSTOM WINDOW SYSTEMS, INC. ANY REPRODUCTION IN PART OR AS A WHOLE WITHOUT THE WRITTEN PERMISSION OF CUSTOM WINDOW SYSTEMS, INC IS PROHIBITED.

FLORIDA APPROVAL NO.:
20834

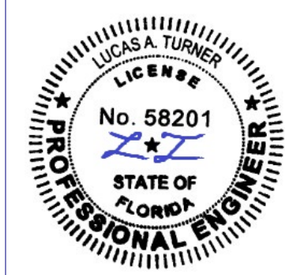

9/16/2026

LUCAS A. TURNER, P.E.
FL PE # 58201
Turner Engineering &
Consulting, Inc.
2428 Old Natchez Trc Trl
Camden, TN 38320
PH. 941-380-1574

SHEET DESCRIPTION:
EXTRUSIONS

DRAWN BY:	DATE:
MCS	9/1/2026
DWG #: CWS-1149	REV.: D
SCALE: 1:2	SHEET 5 OF 12

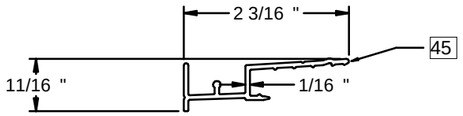

Screen, 1-Track Sill - 2134

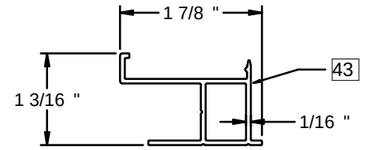

Screen, 1-Track Head/Jamb - 2135

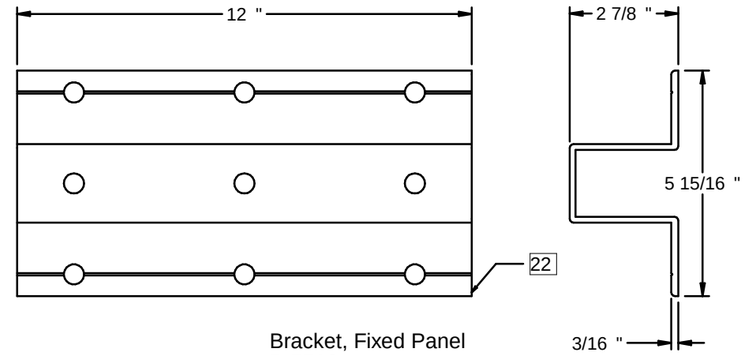

Bracket, Fixed Panel
P-5516

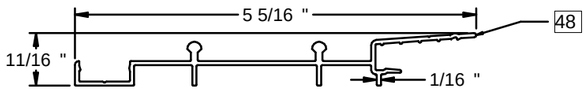

Screen, 2-Track Sill - 2055

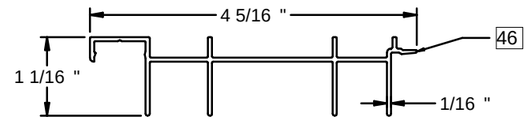

Screen, 2-Track Head - 2053

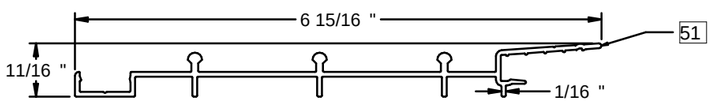

Screen, 3-Track Sill - 2058

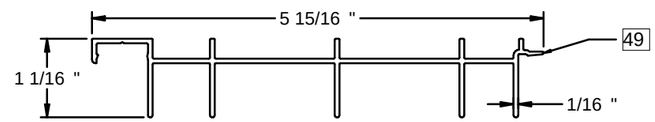

Screen, 3-Track Head - 2056

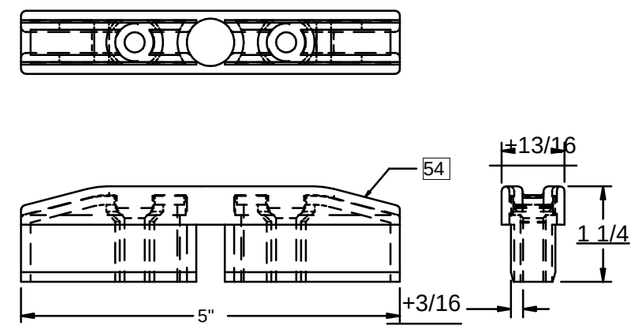

Block, Anti-Lift
P-5477, Nylon

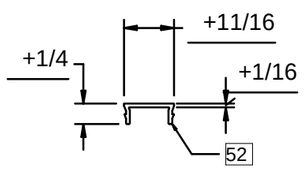

Screen, Snap Cover - 2059

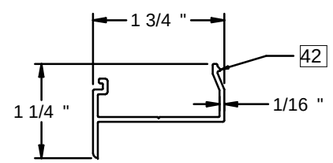

Screen, Astragal - 2136

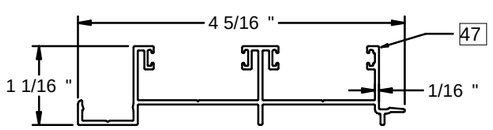

Screen, 2-Track Jamb - 2054

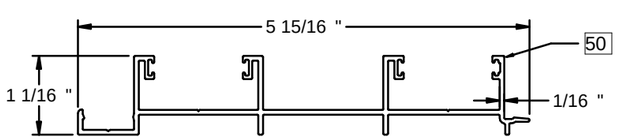

Screen, 3-Track Jamb - 2057

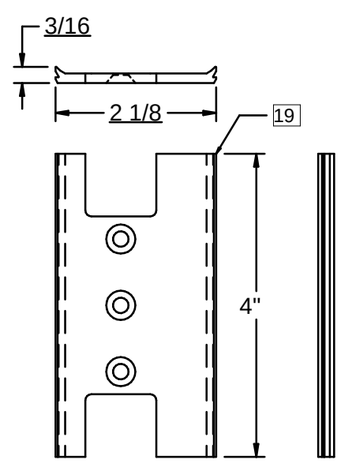

Panel Guide, Interlock - P-5517

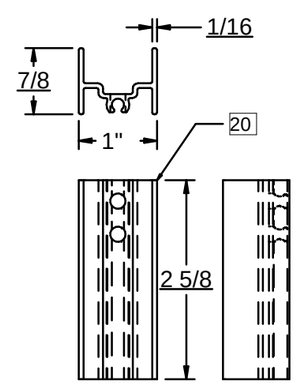

Support Channel, Bot
Rail - Interlock - P-5558

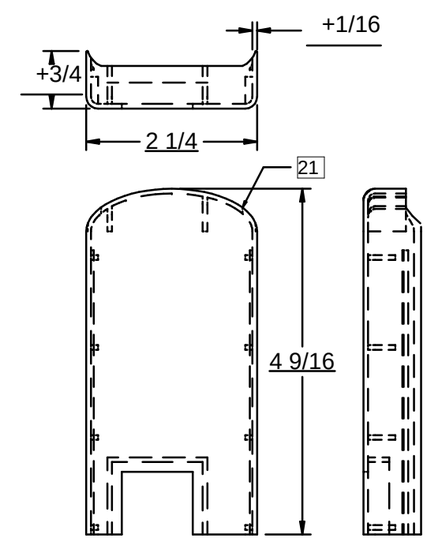

Cover, Interlock - Reinf.
P-5511, Nylon

NOTE: ALL ALUMINUM EXTRUSIONS ARE 6063-T6 UNLESS OTHERWISE NOTED.

CWS
1900 SW 44TH AVE.
OCALA, FLORIDA 34474
WWW.CWS.CC

VMS01

880 PVC SLIDING GLASS DOOR - NON-IMPACT

PROPRIETARY AND CONFIDENTIAL
THE INFORMATION CONTAINED IN THIS DRAWING IS THE SOLE PROPERTY OF CUSTOM WINDOW SYSTEMS, INC. ANY REPRODUCTION IN PART OR AS A WHOLE WITHOUT THE WRITTEN PERMISSION OF CUSTOM WINDOW SYSTEMS, INC IS PROHIBITED.

FLORIDA APPROVAL NO.:
20834

9/16/2026

LUCAS A. TURNER, P.E.
FL PE # 58201
Turner Engineering & Consulting, Inc.
2428 Old Natchez Trc Trl
Camden, TN 38320
PH. 941-380-1574

SHEET DESCRIPTION:
EXTRUSIONS

DRAWN BY:	DATE:
MCS	9/1/2026
DWG #: CWS-1149	REV.: D
SCALE: 1:2	SHEET 6 OF 12

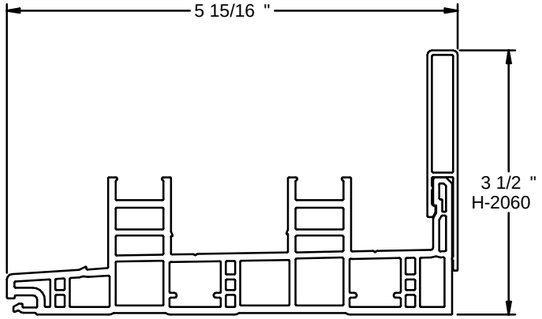

2T Sill w/Riser

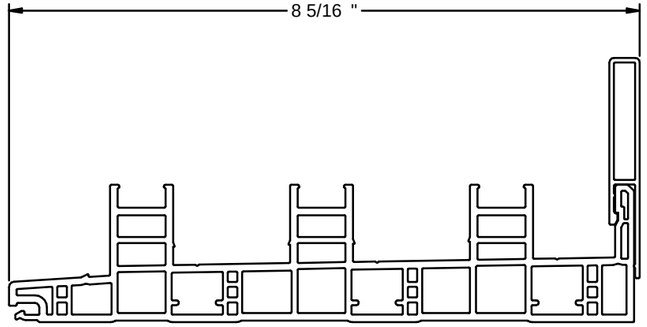

3T Sill w/Riser

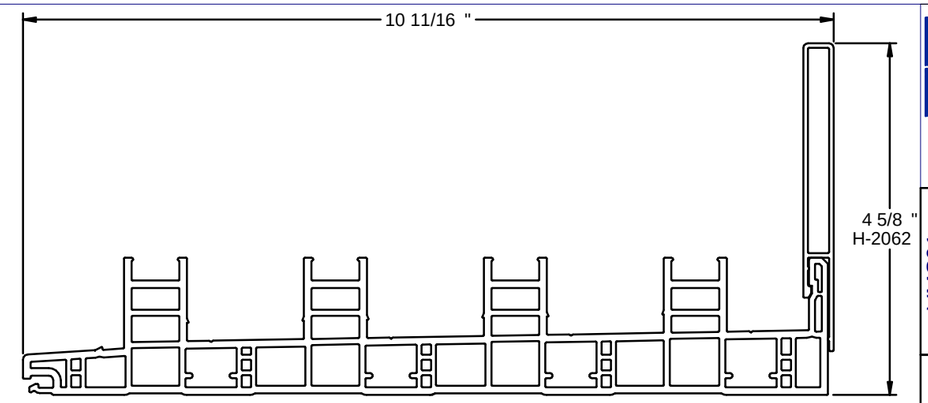

4T Sill w/Riser

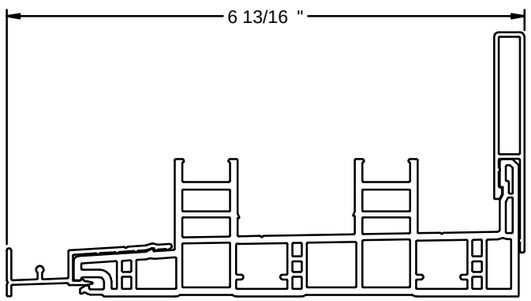

2T Sill w/ 1T Screen

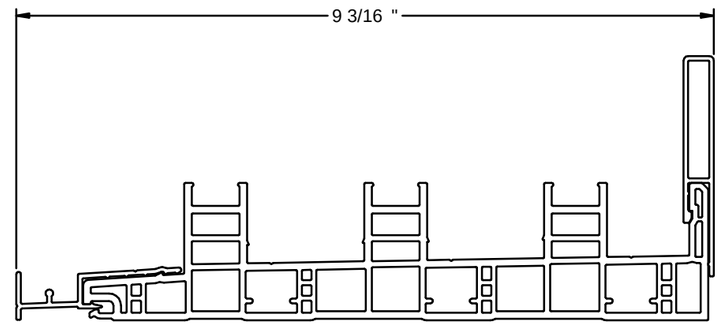

3T Sill w/ 1T Screen

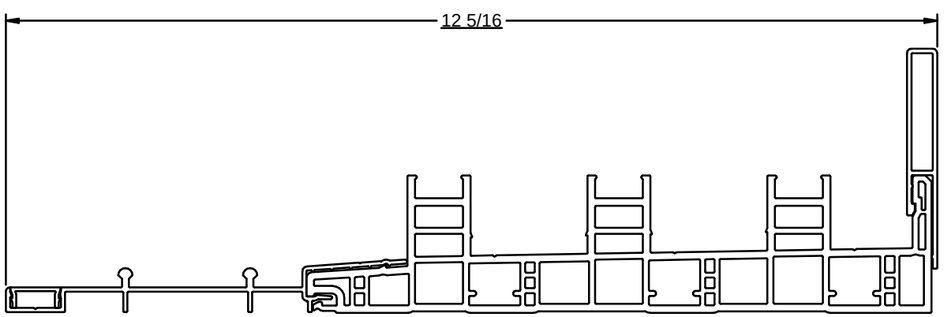

3T Sill w/ 2T Screen

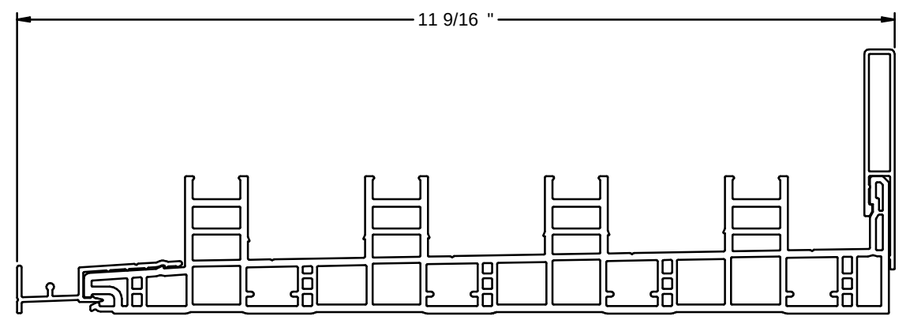

4T Sill w/ 1T Screen

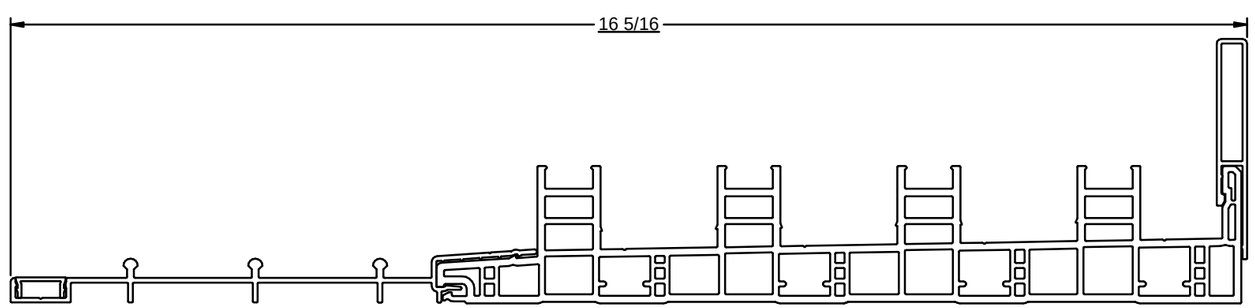

4T Sill w/ 3T Screen

CWS
1900 SW 44TH AVE.
OCALA, FLORIDA 34474
WWW.CWS.CC

VMS01

880 PVC SLIDING GLASS DOOR - NON-IMPACT

PROPRIETARY AND CONFIDENTIAL
THE INFORMATION CONTAINED IN THIS DRAWING IS THE SOLE PROPERTY OF CUSTOM WINDOW SYSTEMS, INC. ANY REPRODUCTION IN PART OR AS A WHOLE WITHOUT THE WRITTEN PERMISSION OF CUSTOM WINDOW SYSTEMS, INC IS PROHIBITED.

FLORIDA APPROVAL NO.:
20834

LUCAS A. TURNER
LICENSE
No. 58201
STATE OF FLORIDA
PROFESSIONAL ENGINEER

9/16/2026

LUCAS A. TURNER, P.E.
FL PE # 58201
Turner Engineering & Consulting, Inc.
2428 Old Natchez Trc Trl
Camden, TN 38320
PH. 941-380-1574

SHEET DESCRIPTION:
TRACK WIDTHS

DRAWN BY:	DATE:
MCS	9/1/2026
DWG #: CWS-1149	REV.: D
SCALE: 1:2	SHEET 7 OF 12

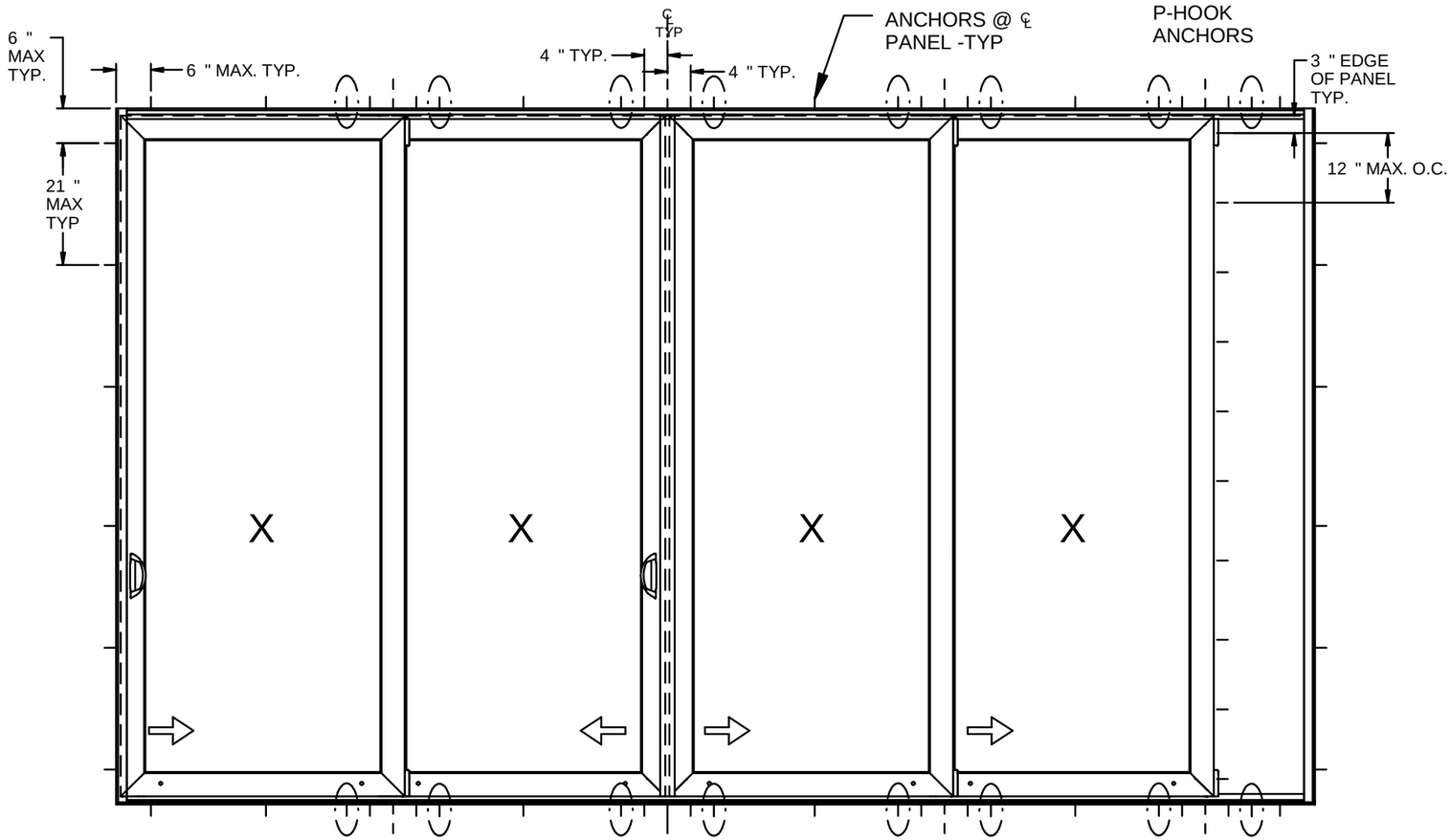

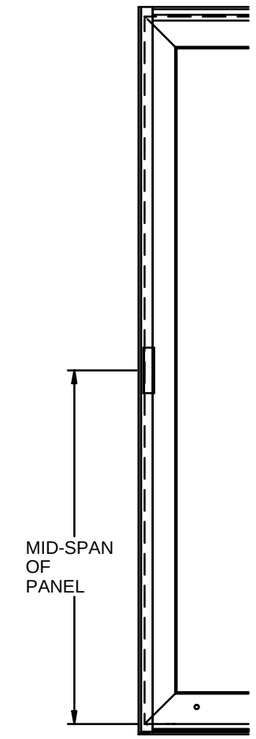

FIXED PANEL CLIPS

* CIRCLED ANCHOR LOCATIONS REQ'D ONLY IN WOOD INSTALLATIONS. (SEE NEXT SHEET FOR DETAIL)

NOTES:

1. INSTALL TWO ANCHORS AT EACH INSTALLATION LOCATION (SEE LAYOUT DETAILS ON SHEETS 8 & 9) EXCEPT FOR 2T SILL & WOOD INSTALLATION LOCATIONS. SEE SPECIAL LOCATIONS AND SPACING FOR 2T SILL (SHEET 8). INSTALL ONE ANCHOR AT EACH WOOD INSTALLATION LOCATION (CIRCLED). SILL ANCHOR SPACING SAME AS HEAD FOR 3T AND 4T. INSTALL ONE ANCHOR AT EACH LOCATION IN HOOKSTRIP.

2. SHIM AS REQ AT EACH INSTALLATION ANCHOR USING LOAD BEARING SHIMS. MAX. ALLOWABLE SHIM STACK TO BE 1/4". USE SHIMS WHERE SPACE GREATER THAN 1/16" IS PRESENT. LOAD BEARING SHIMS SHALL BE CONSTRUCTED OF HIGH DENSITY PLASTIC OR BETTER. WOOD SHIMS ARE NOT ALLOWED.

3. ANCHOR TYPE, SIZE, SPACING AND EMBEDMENT SHALL BE AS SPECIFIED IN THESE DRAWINGS, SEE TABLE 1, SHEET 11

4. ALL INSTALLATION ANCHORS MUST BE MADE OF OR PROTECTED WITH A CORROSION RESISTANT MATERIAL OR COATING. DISSIMILAR METALS OR MATERIALS IN CONTACT WITH PRESSURE TREATED WOOD MUST BE PROTECTED TO PREVENT REACTION.

5. INSTALLATION ANCHORS SHALL BE IN ACCORDANCE WITH ANCHOR MANUFACTURER'S INSTALLATION INSTRUCTIONS, AND ANCHORS SHALL NOT BE USED IN SUBSTRATES WITH STRENGTHS LESS THAN THE MINIMUM SPECIFIED IN TABLE 1, SHEET 11.

6. ANCHOR EMBEDMENT TO SUBSTRATE SHALL BE BEYOND WALL DRESSING OR STUCCO. FOR CONCRETE/CMU OPENINGS, EMBEDMENT SHALL BE BEYOND WOOD BUCKS, IF USED, INTO SUBSTRATE. INSTALLATIONS TO SOLID CONCRETE OR GROUT-FILLED CMU MAY INCLUDE BUT DO NOT REQUIRE 1X WOOD BUCKS BETWEEN THE PRODUCT AND SUBSTRATE. INSTALLATIONS TO HOLLOW CMU REQUIRE THE USE OF 1X BUCKS BETWEEN THE PRODUCT AND SUBSTRATE.

7. A MINIMUM CENTER-TO-CENTER SPACING SHALL BE MAINTAINED BETWEEN ALL FASTENERS: 3" FOR SOLID CONCRETE, 6" FOR CMU MASONRY, 1" FOR WOOD AND METAL.

8. WOOD OR MASONRY OPENINGS, BUCKS AND BUCK FASTENERS SHALL BE PROPERLY DESIGNED BY THE ARCHITECT OR ENGINEER OF RECORD AND INSTALLED TO TRANSFER WIND LOADS TO THE STRUCTURE. SUBSTRATES SHALL MEET THE MINIMUM STRENGTH REQUIREMENTS AS SHOWN IN TABLE1, SHEET 11. CONCRETE AND MASONRY SUBSTRATES MAY NOT BE CRACKED.

9. SEALING AND FLASHING STRATEGIES FOR OVERALL WATER RESISTANCE OF INSTALLATION SHALL BE DONE BY OTHERS FOLLOWING THE CURRENT VERSION OF THE REFERENCE DOCUMENTS: FMA/AAMA 100(FIN WINDOWS), FMA/AAMA 200(FLANGE WINDOWS), FMA/WDMA 250(BOX WINDOWS), FMA/AAMA/WDMA 300(EXTERIOR DOORS)

CWS
1900 SW 44TH AVE.
OCALA, FLORIDA 34474
WWW.CWS.CC

VMS01

880 PVC SLIDING GLASS DOOR - NON-IMPACT

PROPRIETARY AND CONFIDENTIAL
THE INFORMATION CONTAINED IN THIS DRAWING IS THE SOLE PROPERTY OF CUSTOM WINDOW SYSTEMS, INC. ANY REPRODUCTION IN PART OR AS A WHOLE WITHOUT THE WRITTEN PERMISSION OF CUSTOM WINDOW SYSTEMS, INC IS PROHIBITED.

FLORIDA APPROVAL NO.:
20834

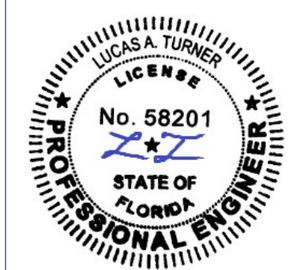

9/16/2026

LUCAS A. TURNER, P.E.
FL PE # 58201
Turner Engineering & Consulting, Inc.
2428 Old Natchez Trc Trl
Camden, TN 38320
PH. 941-380-1574

SHEET DESCRIPTION:
ANCHOR SCHEDULE AND NOTES

DRAWN BY:	DATE:
MCS	9/1/2026
DWG #: CWS-1149	REV.: D
SCALE: 1:25	SHEET 8 OF 12

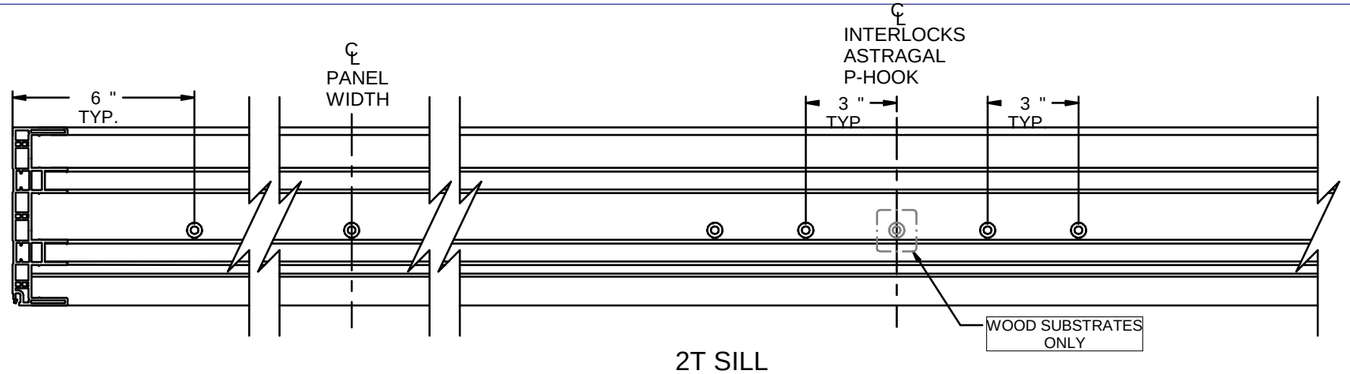

2T SILL

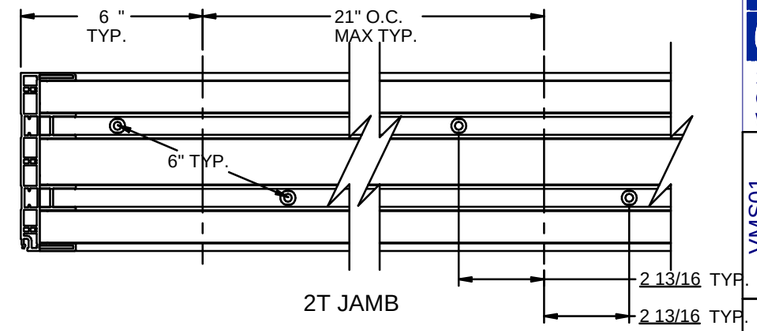

2T JAMB

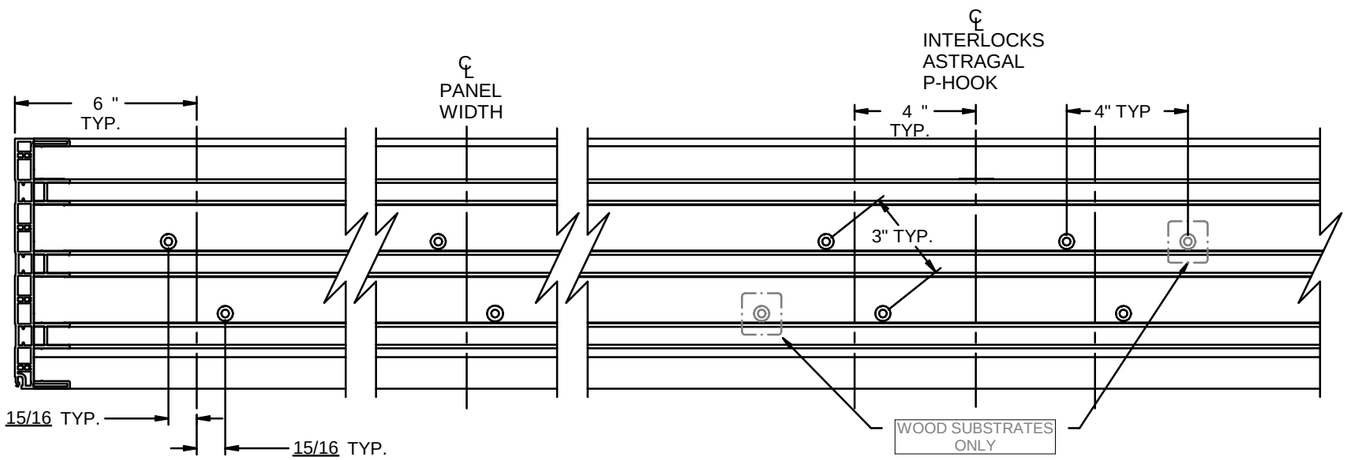

3T SILL

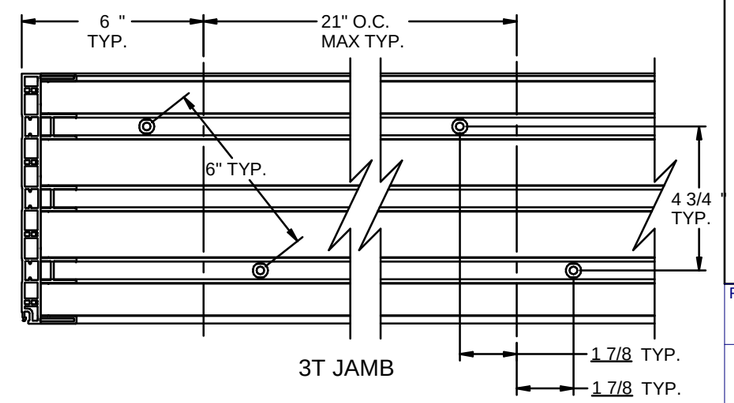

3T JAMB

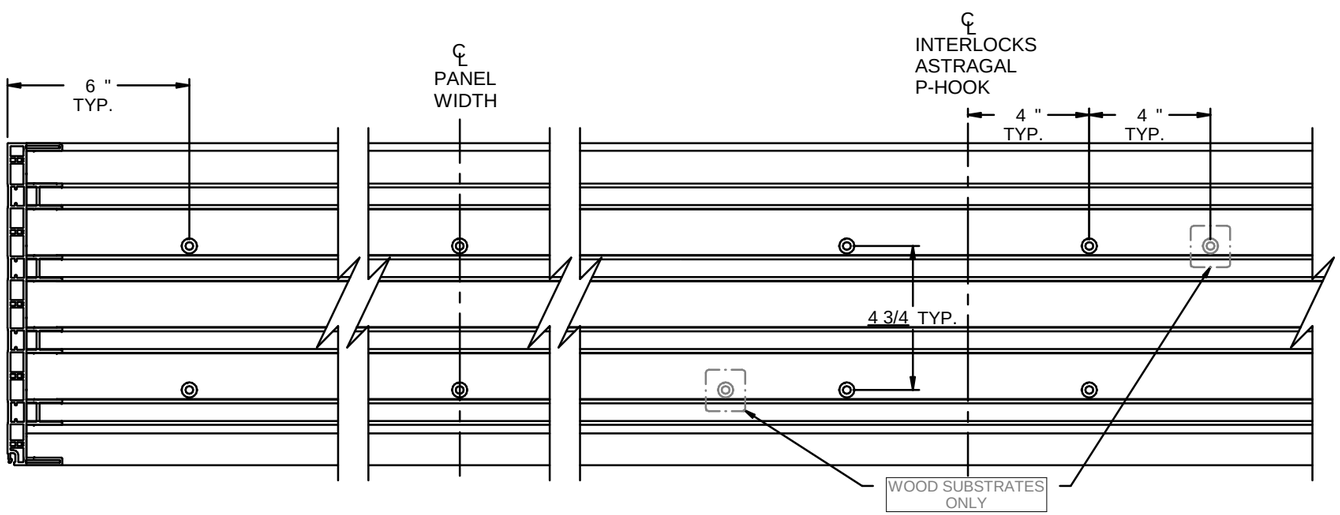

4T SILL

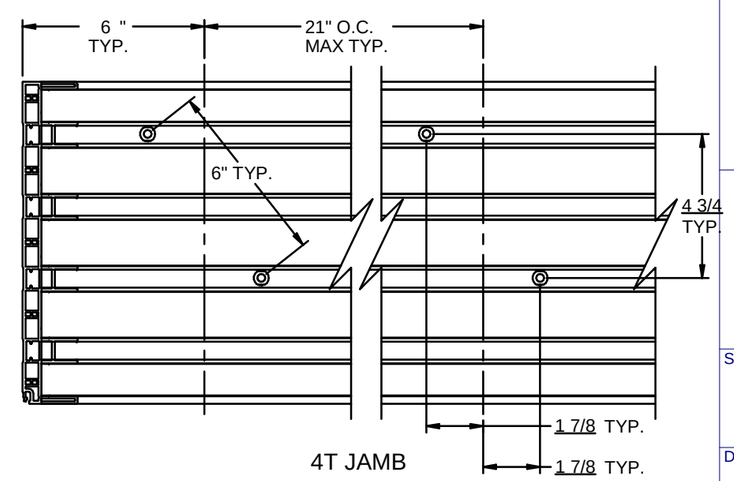

4T JAMB

NOTE: ℄ = CENTERLINE OF INTERLOCK OR ASTRAGAL

* CIRCLED ANCHOR LOCATIONS REQ'D ONLY IN WOOD INSTALLATIONS.

CWS
1900 SW 44TH AVE.
OCALA, FLORIDA 34474
WWW.CWS.CC

VMS01

880 PVC SLIDING GLASS DOOR - NON-IMPACT

PROPRIETARY AND CONFIDENTIAL
THE INFORMATION CONTAINED IN THIS DRAWING IS THE SOLE PROPERTY OF CUSTOM WINDOW SYSTEMS, INC. ANY REPRODUCTION IN PART OR AS A WHOLE WITHOUT THE WRITTEN PERMISSION OF CUSTOM WINDOW SYSTEMS, INC IS PROHIBITED.

FLORIDA APPROVAL NO.:
20834

LUCAS A. TURNER
LICENSE
No. 58201
STATE OF FLORIDA
PROFESSIONAL ENGINEER

9/16/2026

LUCAS A. TURNER, P.E.
FL PE # 58201
Turner Engineering & Consulting, Inc.
2428 Old Natchez Trc Trl
Camden, TN 38320
PH. 941-380-1574

SHEET DESCRIPTION:
ANCHOR PATTERNS (JAMB & SILL)

DRAWN BY:	DATE:
MCS	9/1/2026
DWG #:	REV.:
CWS-1149	D
SCALE:	SHEET
1:5	9 OF 12

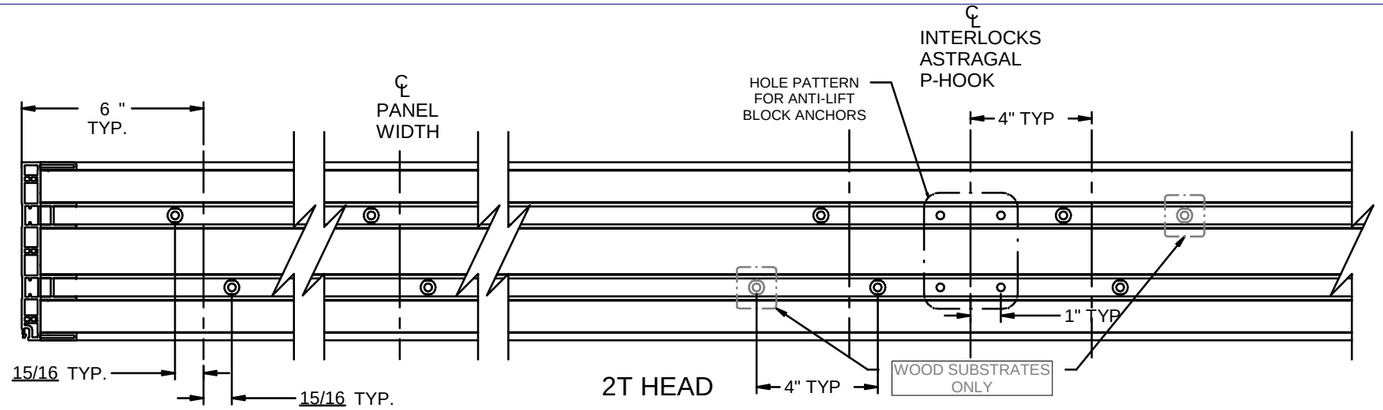

2T HEAD

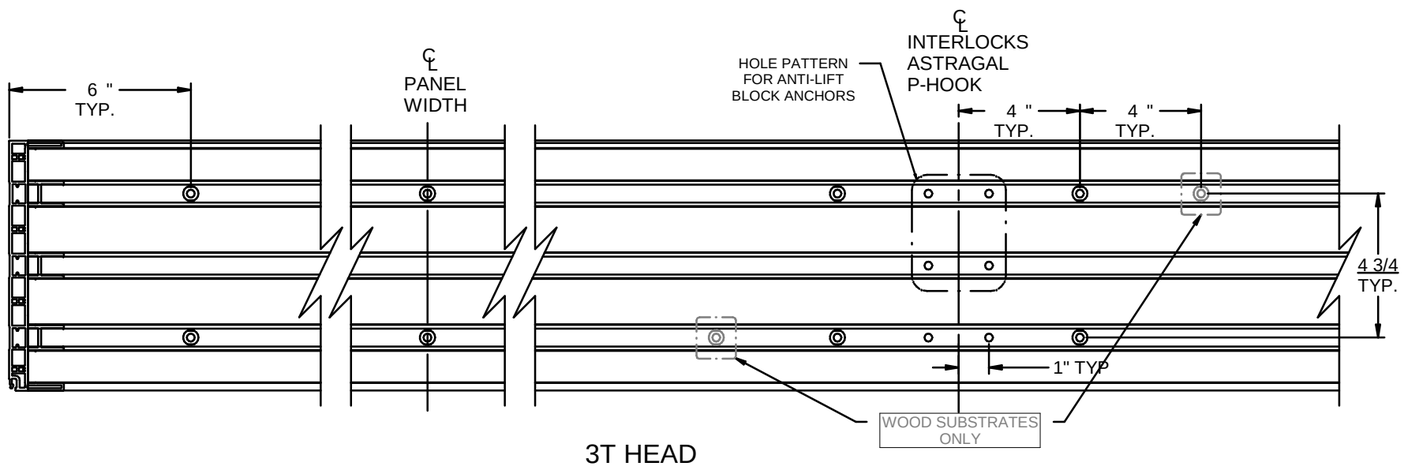

3T HEAD

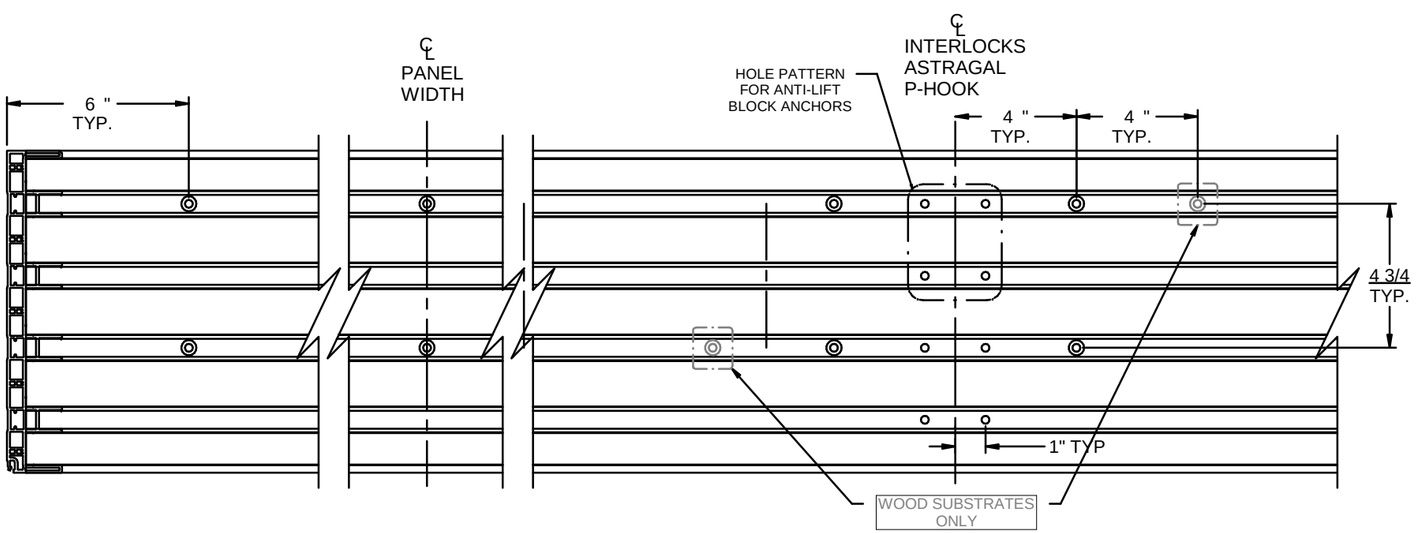

4T HEAD

NOTE: ℄ = CENTERLINE OF INTERLOCK OR ASTRAGAL

* CIRCLED ANCHOR LOCATIONS REQ'D ONLY IN WOOD INSTALLATIONS.

CWS
1900 SW 44TH AVE.
OCALA, FLORIDA 34474
WWW.CWS.CC

VMS01

880 PVC SLIDING GLASS DOOR - NON-IMPACT

PROPRIETARY AND CONFIDENTIAL
THE INFORMATION CONTAINED IN THIS DRAWING IS THE SOLE PROPERTY OF CUSTOM WINDOW SYSTEMS, INC. ANY REPRODUCTION IN PART OR AS A WHOLE WITHOUT THE WRITTEN PERMISSION OF CUSTOM WINDOW SYSTEMS, INC IS PROHIBITED.

FLORIDA APPROVAL NO.:
20834

9/16/2026

LUCAS A. TURNER, P.E.
FL PE # 58201
Turner Engineering & Consulting, Inc.
2428 Old Natchez Trc Trl
Camden, TN 38320
PH. 941-380-1574

SHEET DESCRIPTION:
ANCHOR PATTERNS (HEAD)

DRAWN BY:	DATE:
MCS	9/1/2026
DWG #:	REV.:
CWS-1149	D
SCALE:	SHEET
1:5	10 OF 12

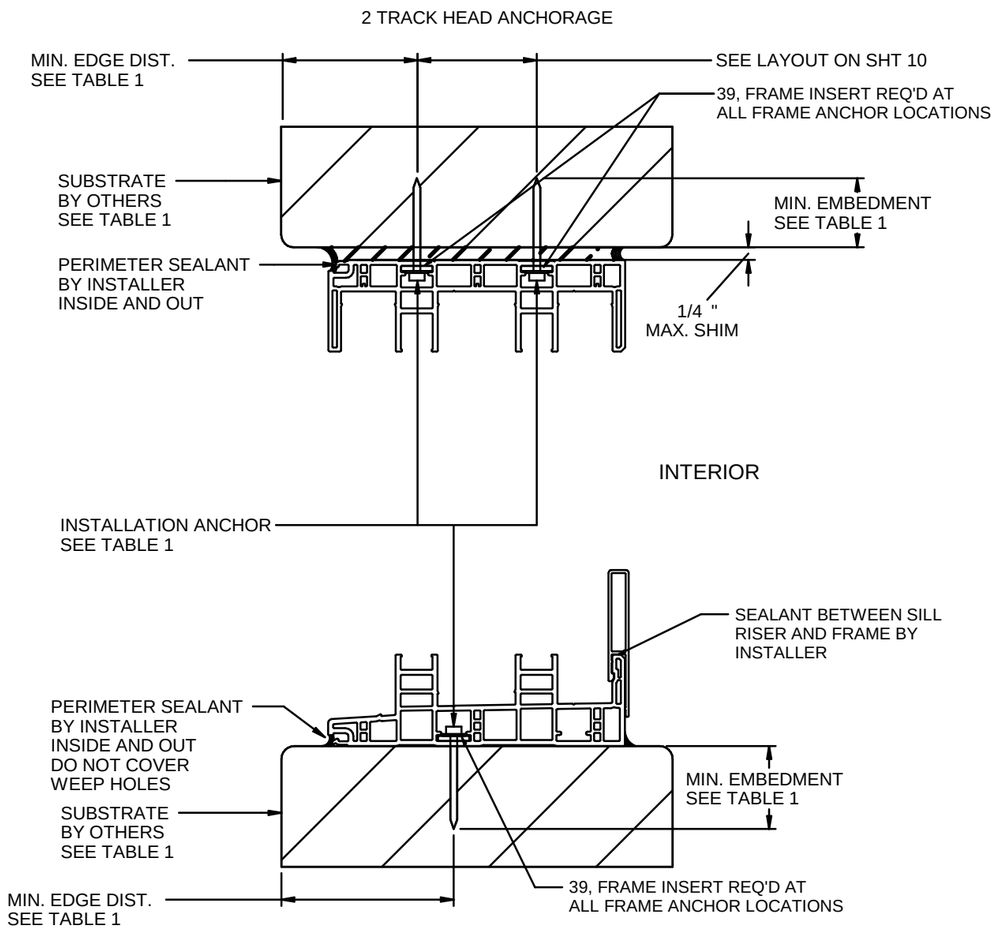

A 11 VERTICAL SECTION
2 TRACK SILL ANCHORAGE

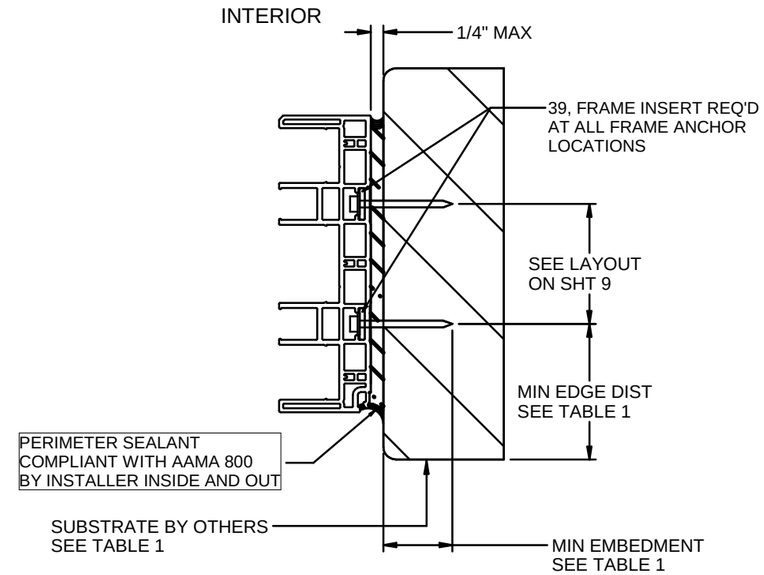

B 11 HORIZONTAL SECTION
2 TRACK JAMB ANCHORAGE

FOR INSTALLATIONS WITHIN 3,000 FEET OF A SALTWATER COASTLINE, ANCHORAGE MUST BE REVIEWED FOR COMPLIANCE WITH FBC SECTION 1711 OR SECTION R332 OF THE FLORIDA RESIDENTIAL CODE. REFER TO THE CORRESPONDING EVALUATION REPORT OF THIS APPROVAL FOR ADDITIONAL INFORMATION.

TABLE 1: APPROVED INSTALLATION FASTENERS

SUBSTRATE TYPE	ANCHOR TYPE	MIN. EMBEDMENT	MIN. EDGE DIST.
CONCRETE (2.0 KSI MIN.)	1/4" ITW TAPCON	1-1/2"	4"
CONCRETE (3.05 KSI MIN.)	1/4" DEWALT ULTRACON+	1-3/4"	2-1/2"
2X MIN. SOUTHERN PINE (G=0.55)	1/4" ITW TAPCON OR DEWALT ULTRACON+	1-3/8"	7/8"
2X MIN. SOUTHERN PINE (G=0.55)	#12 WOOD SCREW	1-3/8"	7/8"
16 GAUGE (0.060") MIN. STEEL STUD (33 KSI YIELD MIN)	#12-14 HILTI KWIK-FLEX OR ITW TEKS SELF-DRILLING SCREW	FULL THREAD THRU 0.060"	1/2"
1/8" ALUM. (6063-T5 MIN.) OR 1/8" STEEL (33 KSI MIN.)	#12 GRADE 5 SELF-TAPPING / DRILLING SCREW	FULL THREAD THRU 0.125"	1/2"
HOOKSTRIP OR JAMB FRAME ONLY: HOLLOW OR GROUT-FILLED CMU (ASTM C-90)	1/4" DEWALT ULTRACON+	1-3/4"	2-1/2"

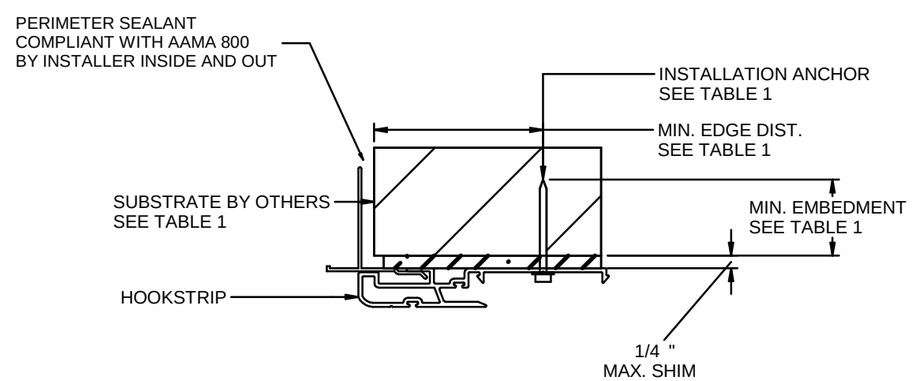

C 11 HORIZONTAL SECTION
HOOK STRIP

CWS
1900 SW 44TH AVE.
OCALA, FLORIDA 34474
WWW.CWS.CC

VMS01

880 PVC SLIDING GLASS DOOR - NON-IMPACT

PROPRIETARY AND CONFIDENTIAL
THE INFORMATION CONTAINED IN THIS DRAWING IS THE SOLE PROPERTY OF CUSTOM WINDOW SYSTEMS, INC. ANY REPRODUCTION IN PART OR AS A WHOLE WITHOUT THE WRITTEN PERMISSION OF CUSTOM WINDOW SYSTEMS, INC IS PROHIBITED.

FLORIDA APPROVAL NO.:
20834

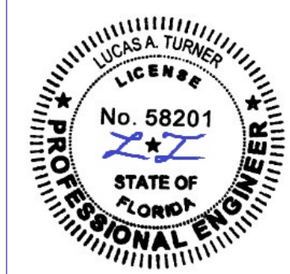

9/16/2026

LUCAS A. TURNER, P.E.
FL PE # 58201
Turner Engineering & Consulting, Inc.
2428 Old Natchez Trc Trl
Camden, TN 38320
PH. 941-380-1574

SHEET DESCRIPTION:
INSTALLATION DETAILS
2 TRACK

DRAWN BY:	DATE:
MCS	9/1/2026
DWG #: CWS-1149	REV.: D
SCALE: 1:3	SHEET 11 OF 12

3 TRACK HEAD ANCHORAGE

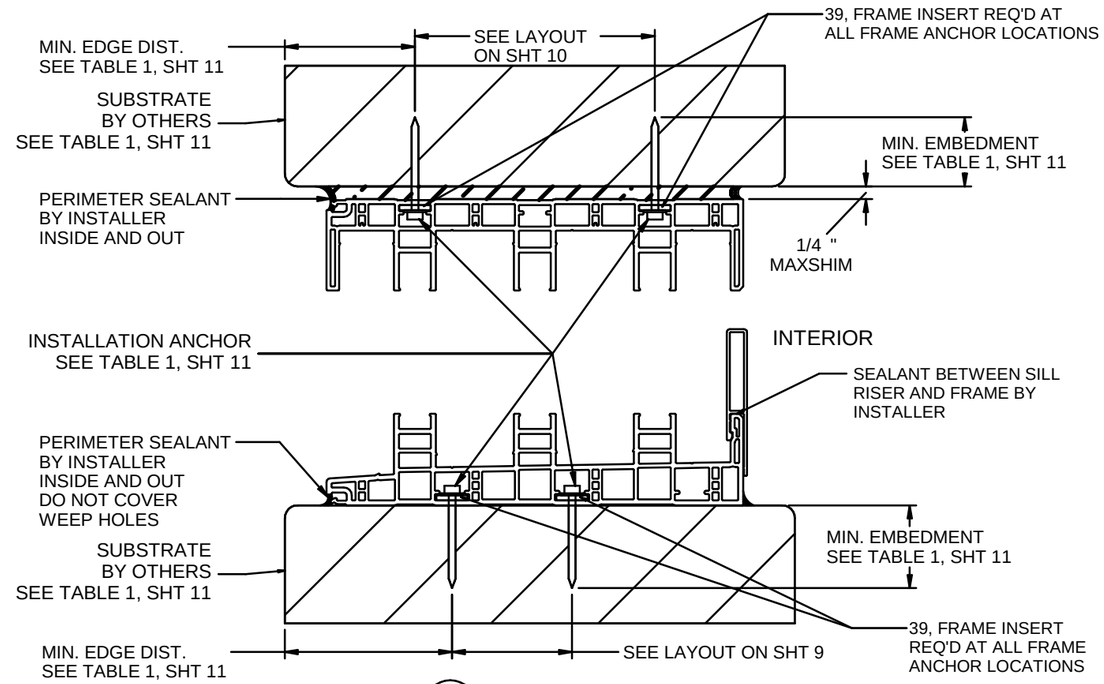

D / 12 VERTICAL SECTION
3 TRACK SILL ANCHORAGE

4 TRACK HEAD ANCHORAGE

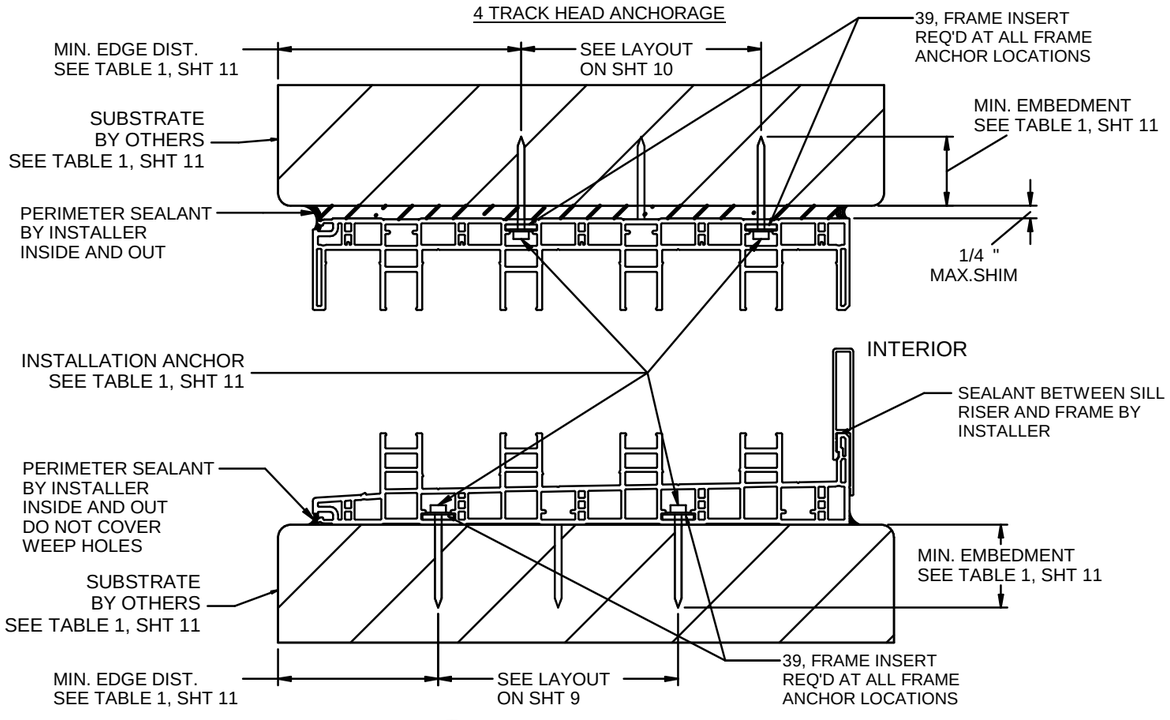

E / 12 VERTICAL SECTION
4 TRACK SILL ANCHORAGE

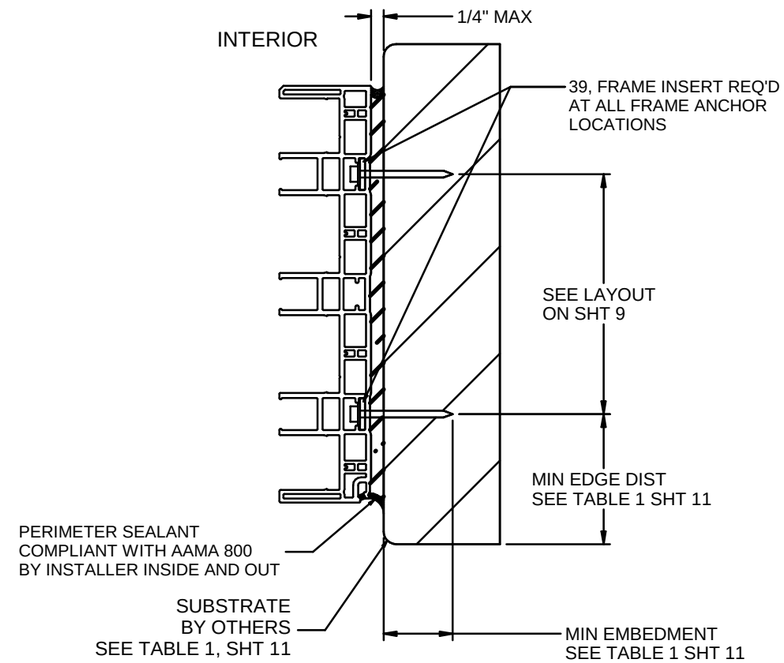

F / 12 HORIZONTAL SECTION
3 TRACK JAMB ANCHORAGE

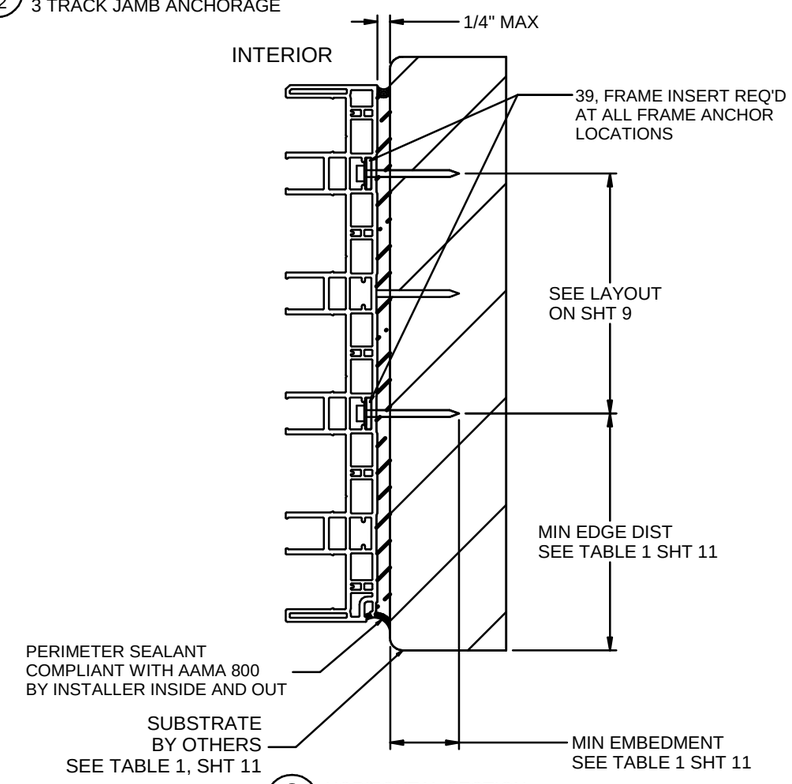

G / 12 HORIZONTAL SECTION
4 TRACK JAMB ANCHORAGE

CWS
1900 SW 44TH AVE.
OCALA, FLORIDA 34474
WWW.CWS.CC

VMS01

880 PVC SLIDING GLASS DOOR - NON-IMPACT

PROPRIETARY AND CONFIDENTIAL
THE INFORMATION CONTAINED IN THIS DRAWING IS THE SOLE PROPERTY OF CUSTOM WINDOW SYSTEMS, INC. ANY REPRODUCTION IN PART OR AS A WHOLE WITHOUT THE WRITTEN PERMISSION OF CUSTOM WINDOW SYSTEMS, INC IS PROHIBITED.

FLORIDA APPROVAL NO.:
20834

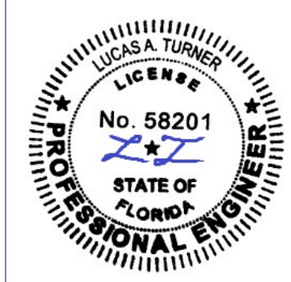

9/16/2026

LUCAS A. TURNER, P.E.
FL PE # 58201
Turner Engineering & Consulting, Inc.
2428 Old Natchez Trc Trl
Camden, TN 38320
PH. 941-380-1574

SHEET DESCRIPTION:
INSTALLATION DETAILS
3 & 4 TRACK

DRAWN BY:	DATE:
MCS	9/1/2026
DWG #: CWS-1149	REV.: D
SCALE: 1:3	SHEET 12 OF 12