EVALUATION REPORT OF
UNION CORRUGATING COMPANY
'24 GA. SL175 PANEL'

FLORIDA BUILDING CODE 7TH EDITION (2020)
FLORIDA PRODUCT APPROVAL
FL 20484.9-R2
ROOFING
METAL ROOFING

Prepared For:
Union Corrugating Company
701 S. King St.
Fayetteville, NC 28301
Telephone: (910) 483-0479
Fax: (910) 483-1091

Prepared By:
Bala Sockalingam, Ph.D., P.E.
Florida Professional Engineer #62240
1216 N Lansing Ave., Suite C
Tulsa, OK 74106
Telephone: (918) 492-5992
FAX: (866) 366-1543

This report consists of
Evaluation Report (3 Pages including cover)
Installation Details (1 Page)
Load Span Tables (2 Pages)

Report No. C2401-9
Date: 10.10.2020

BALA SOCKALINGAM
LICENSE
No 62240
STATE OF
FLORIDA
PROFESSIONAL ENGINEER

10.10.2020

Manufacturer:	Union Corrugating Company
Product Name:	SL175
Panel Description:	Standing seam panel with max. 18" wide coverage and 1.75" high ribs
Materials:	Minimum 24 ga., 50 ksi steel. Galvanized coated steel (ASTM A653) or Galvalume coated steel (ASTM A792) or painted steel (ASTM A755). Corrosion resistant as per FBC 2020 Section 1507.4.3.
Deck Description:	Min. 15/32" thick APA rated plywood or min. ¾" thick wood plank (min SG of 0.42) for new and existing constructions. Designed by others and installed as per FBC 2020.
Underlayment:	Minimum underlayment as per FBC 2020 Section 1507.4.5.1
Slope:	1/4:12 or greater in accordance with FBC 2020 Section 1507.4.2
Design Uplift Pressure:	39.8 psf at clip spacing of 36" o.c. with felt underlayment 78.6 psf at clip spacing of 8" o.c. with felt underlayment 93.5 psf at clip spacing of 12" o.c. with self-adhering underlayment
Panel Attachment:	18 ga. SL175 UL Clip with (2) #10-12 x 1" long pancake head wood screws per clip through underlayment into deck. Clips and fasteners are corrosion resistant as per FBC 2020 Section 1506.7 and 1507.4.4, respectively. Fastener shall be of sufficient length to penetrate through the deck a minimum of 1/4".
Test Standards:	Roof assembly tested in accordance with UL580-06 'Uplift Resistance of Roof Assemblies' & UL1897-04 'Uplift Tests for Roof Covering Systems'.
Test Equivalency:	The test procedures in UL 1897-04 comply with test procedures prescribed in UL 1897-12.
Code Compliance:	The product described herein has demonstrated compliance with FBC 2020 Section 1507.4.
Product Limitations:	Design wind loads shall be determined for each project in accordance with FBC 2020 Section 1609 or ASCE 7-16 using allowable stress design. Maximum clip spacing listed herein shall not be exceeded. The design pressure for reduced clip spacing may be computed using rational analysis prepared by a Florida Professional Engineer or based on Union load span tables. This product is not approved for use in the High Velocity Hurricane Zone. Fire classification is not within scope of this Evaluation Report. Refer to FBC 2020 Section 1505 and

current approved roofing materials directory or ASTM E108/UL790 report from an accredited laboratory for fire ratings of this product.

Supporting Documents: UL580/UL1897 Test Report
Farabaugh Engineering and Testing Inc.
Project No. T199-16, Reporting Date 5/16/16

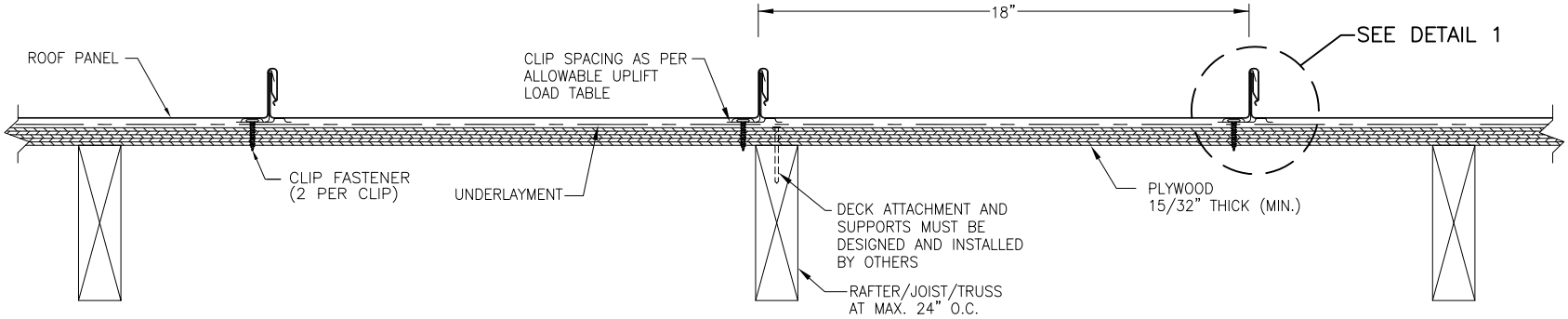

TYPICAL PANEL INSTALLATION X–SECTION

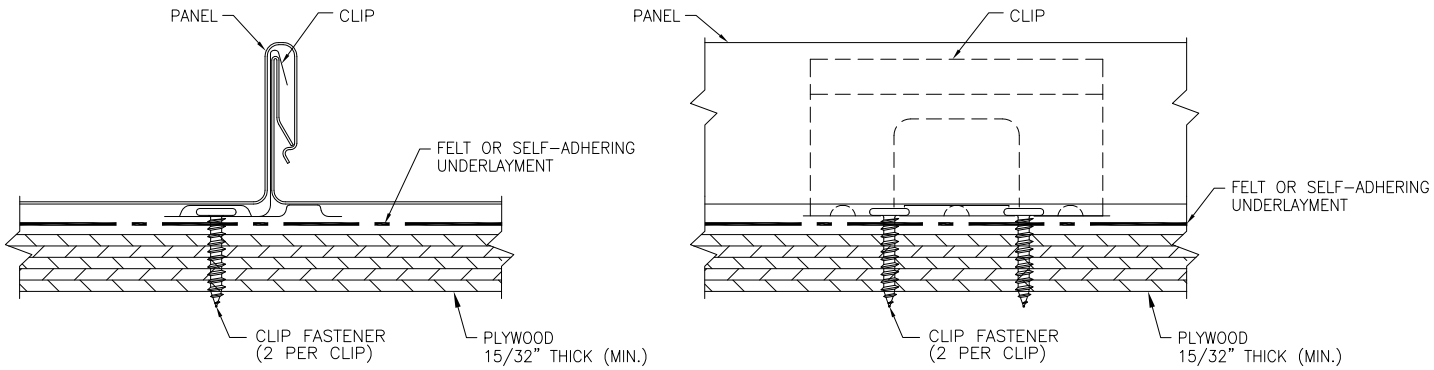

DETAIL 1

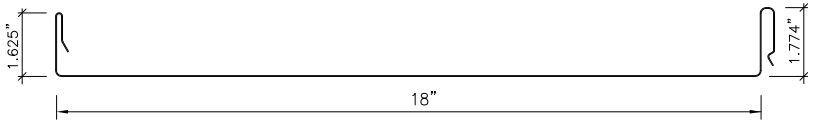

PANEL SECTION
(MIN 24 GA.)

GENERAL NOTES:

1. ARCHITECTURAL STANDING SEAM ROOF PANEL HAS BEEN DESIGNED IN ACCORDANCE WITH THE FLORIDA BUILDING CODE (FBC).
2. ROOF PANELS SHALL BE MIN. 24 GA. (t = 0.023"). EFFECTIVE COVERING WIDTH OF PANEL = 18".
3. THE ROOF PANELS SHALL BE INSTALLED OVER STRUCTURE AS SPECIFIED ON THIS DRAWING.
4. REQUIRED DESIGN WIND LOADS SHALL BE DETERMINED FOR EACH PROJECT. THIS PANEL SYSTEM MAY NOT BE INSTALLED WHEN THE REQUIRED DESIGN WIND LOADS ARE GREATER THAN THE ALLOWABLE WIND LOAD TABLE.
5. CLIPS AND FASTENERS MUST BE IN ACCORDANCE WITH THIS DRAWING & FLORIDA BUILDING CODE. IF A DIFFERENCE OCCURS BETWEEN THE MINIMUM REQUIREMENTS OF THIS DRAWING & THE CODE, THE CODE SHALL CONTROL.
6. DECK AND SUPPORTS MUST BE DESIGNED TO WITHSTAND WIND LOADS AS REQUIRED FOR EACH APPLICATION AND ARE THE RESPONSIBILITY OF OTHERS.

DRAWN BY: B.S.	CHECKED BY: J.S.
PLOT:	DATE: 5/20/15

NO.	REVISION DESCRIPTION	BY	DATE

DRAWING TITLE
SL175 STANDING SEAM ROOF PANEL

MANUFACTURER
UNION CORRUGATING COMPANY
P.O. BOX 229
FAYETTEVILLE, NC 28302
910–483–0479

CONSULTANTS
BALA SOCKALINGAM, PH.D., P.E.
1216 N LANSING AVE, SUITE C
TULSA, OK 74106
PHONE: 918–492–5992 FAX: 866–366–1543

DRAWING NO. C2401–9 REV.

PAGE NO. 1 OF 1

UNION CORRUGATING COMPANY
SL175 Panel Uplift Loads
(Min 24 ga.)
With Felt Underlayment

Description	Clip Spacing Along Panel Length (in)	Allowable Uplift Load (psf)
Maximum Coverage Width: 18"	**8**	**78.6**
	10	75.8
	12	73.1
18 ga. SL175 UL Clip	14	70.3
	16	67.5
	18	64.7
Clip Fasteners: #10-12 x 1" long pancake head screws	20	62.0
	22	59.2
	24	56.4
	26	53.7
	28	50.9
	30	47.8
	32	44.8
	34	42.1
	36	**39.8**

Notes:

1. The bold numbers indicate design loads calculated from test data with safety factor of 2.
2. Panels must be installed as per Evaluation Report FL 20484.9 and Union current installation procedure.

BALA SOCKALINGAM
LICENSE
No 62240
STATE OF FLORIDA
PROFESSIONAL ENGINEER

10.10.2020

1216 N Lansing Ave., Suite C
Tulsa, Ok 74106
918 492 5992

Bala Sockalingam, Ph.D., P.E.
FL 62240

UNION CORRUGATING COMPANY
SL175 Panel Uplift Loads
(Min 24 ga.)
With Self-Adhering Underlayment

Description	Clip Spacing Along Panel Length (in)	Allowable Uplift Load (psf)
Maximum Coverage Width: 18"	**12**	**93.5**
	14	89.0
	16	84.6
18 ga. SL175 UL Clip	18	79.6
	20	71.6
	22	65.1
Clip Fasteners: #10-12 x 1" long pancake head screws	24	59.7
	26	55.1
	28	51.2
	30	47.8
	32	44.8
	34	42.1
	36	**39.8**

Notes:

1. The bold numbers indicate design loads calculated from test data with safety factor of 2.
2. Panels must be installed as per Evaluation Report FL 20484.9 and Union current installation procedure.

BALA SOCKALINGAM
LICENSE
No 62240
STATE OF FLORIDA
PROFESSIONAL ENGINEER

10.10.2020

1216 N Lansing Ave., Suite C
Tulsa, Ok 74106
918 492 5992

Bala Sockalingam, Ph.D., P.E.
FL 62240