Evaluation Report

"Double-Lock Zee-Lock Panel"

With Floating Zee-Clip

Metal Roof Assembly

Manufacturer:

Berridge Manufacturing Company

1720 Maury Road

Houston, TX 77026

(800) 231-8127

for

Florida Product Approval

FL 19999.2 R6

Florida Building Code 9th Edition (2026)

Method:	**1 - D**
Category:	**Roofing**
Sub - Category:	**Metal Roofing**

Product:	"Double-Lock Zee-Lock" Roof Panel
Material:	Aluminum
Panel Thickness:	0.032"
Panel Width:	16"
Support:	Steel Deck

This item has been digitally signed and sealed by James L. Buckner, P.E., on this date below. Printed copies of this document are not considered signed and sealed, and the signature must be verified on any electronic copies.

Prepared by:
James L. Buckner, P.E., S.E.C.B.
Florida Professional Engineer # 31242
Florida Evaluation ANE ID: 1916
Project Manager: Diana Galloway
Report No. 26-809-ZLw2pZC-A3S-ER
(Revises 23-542-ZLw2pZC-A3S-ER, FL19999.2 R5)
Date: 08/17/2026

JAMES L. BUCKNER
LICENSE
No 31242
STATE OF FLORIDA
PROFESSIONAL ENGINEER

James L. Buckner, P.E.
FL31242
2026.08.17 15:16:33 -04'00'

Contents:

Evaluation Report Pages: 1 – 8

Manufacturer:

Berridge Manufacturing Company
1720 Maury Road
Houston, TX 77026
(800) 231-8127
www.berridge.com

Product Name: **"Double-Lock Zee-Lock"**

Product Category: Roofing

Product Sub-Category Metal Roofing

Compliance Method: State Product Approval Rule 61G20-3.005 (1) (d)

Product/System Description: "Double-Lock Zee-Lock"" Double Lock Standing Seam Roof Panel
2" Rib Height, 16" wide, 0.032" Aluminum roof panel restrained by "Zee-Clip" 2-piece floating panel clips, fastened into Steel Deck.

Product Assembly as Evaluated: Refer to Page 4 of this report for product assembly components/materials & standards:

1.	Roof Panel	"Zee-Lock"
2.	Panel Clip	"Floating Zee-Clip"
3.	Fasteners	#14
4.	Underlayment	Per Page 5
5.	Insulation (Optional) with Bearing Plate	Per Page 5

Support:

Type:
Steel Deck
(Design of steel deck and its attachment to support framing is outside the scope of this evaluation.)

Description:
- 22 Gauge minimum
- Yield Strength: 40 ksi minimum

Slope: Minimum slope shall be in compliance with FBC Chapter 15 Section 1507.4.2, applicable code sections and in accordance with manufacturer's recommendations.

Performance: Wind Uplift Resistance:
- Design Uplift Pressure: **Refer to Table "A"**
  (Refer to "Table A" attachment details herein)

Performance Standards: The product described herein has demonstrated compliance with:

- TAS 125-03 – *Standard Requirements for Metal Roofing Systems*

Code Compliance: The product(s) described herein have demonstrated compliance with the performance standards listed above as referenced in the:
Florida Building Code 9th Edition (2026)

Evaluation Report Scope: This product evaluation is limited to compliance with the structural requirements of the Florida Building Code, as related to the scope section to Florida Product Approval Rule 61G20-3.001.

Limitations and Conditions of Use:

Scope of "Limitations and Conditions of Use" for this evaluation:

This evaluation report for "Optional Statewide Approval" contains technical documentation, specifications and installation method(s) which include "Limitations and Conditions of Use" throughout the report in accordance with Rule 61G20-3.005. Per Rule 61G20-3.004, the Florida Building Commission is the authority to approve products under "Optional Statewide Approval".

- This report is a building code product evaluation per FLPE rule (FAC) 61G15-36 to comply with Florida product approval rule (FAC) 61G20-3. This evaluation report is part of the Florida Building Commission approval for the listed code related criteria. This report by James Buckner, P.E. and CBUCK Engineering is not a design certification of code compliance construction submittal documentation, per FBC section 107, for any individual structure, site specific or permit design.
- All metal components and fasteners shall be corrosion resistant in accordance with applicable sections of FBC. Installations located within 3000 feet of a saltwater coastline shall comply with Section 1711 in accordance with authorities having jurisdiction.
- Metal roof and hip ridge covers are outside the scope of this evaluation and shall comply with FBC Section 1504.3.1.1.
- Design of support system is outside the scope of this report.
- Fire Classification is outside the scope of Rule 61G20-3, and is therefore not included in this evaluation.
- This evaluation report does not evaluate the use of this product for use in the High Velocity Hurricane Zone code section. (Dade & Broward Counties)

Option for application outside "Limitations and Conditions of Use"

Rule 61G20-3.005(1)(e) allows engineering analysis for "project specific approval by the local authorities having jurisdiction in accordance with the alternate methods and materials authorized in the Code". Any modification of the product as evaluated in this report and approved by the Florida Building Commission is outside the scope of this evaluation and will be the responsibility of others.

Quality Assurance: The manufacturer has demonstrated compliance of roof panel products in accordance with the Florida Building Code and Rule 61G20-3.0005 (3) for manufacturing under a quality assurance program audited by an approved quality assurance entity through **UL, LLC** (FBC Organization #: QUA 9625).

Components/Materials (by Manufacturer):

Roof Panel: Berridge "Double-Lock Zee-Lock"

Material:	Aluminum
Thickness:	0.032" (min.)
Panel Width:	16" (max.) Coverage
Rib Height:	2"
Alloy Type:	3105-H14, In compliance with ASTM B 209
Corrosion Resistance:	In compliance with FBC Section 1507.4.3

Roof Panel Clip: Berridge "Floating Zee-Clip"

Type:	Two-Piece, low, floating clip
Overall Dimensions:	2.31"(tall) x 1.5"(wide) x 4.3" (long)
<u>Clip Top Piece</u>	
Material:	Stainless Steel
Thickness:	22 Gauge
Yield Strength:	40 ksi min.
Dimensions:	2.23"(tall) x 0.5"(wide) x 4.3" (long)
<u>Clip Bottom Piece</u>	
Material:	Galvanized Steel
Thickness:	16 Gauge
Yield Strength:	40 ksi min.
Dimensions:	0.56"(tall) x 1.15"(wide) x 2" (long)
Corrosion Resistance:	Per FBC Section 1506.7

Fasteners:

Type:	Low Profile Self-Drilling Self-Tapping Screw
Size :	#14 – 13 x 9"
Corrosion Resistance:	Per FBC Section 1506.6 and 1507.4.4
Standard:	Per SAE J78-1979

Bearing Plate (Required with use of Rigid Insulation Board):

Material:	Galvanized Steel
Size:	6" x 6"
Thickness:	24 gauge
Yield Strength:	40 ksi min.

Components & Materials: (by Others)

Underlayment:

Material and application shall be in compliance with FBC Section 1507.1.1 and in accordance with applicable code sections and manufacturer's recommendations.

Insulation:

Type:	Rigid Insulation Board
Thickness:	4" - 6" (max.)
Properties:	
Density:	2.25 pcf (lbs/ft^3) min.
Or Compressive Strength:	20 psi min.

Insulation Notes:

- Rigid Insulation shall meet minimum density OR compressive strength.
- Insulation shall comply with FBC Section 1508. When insulation is incorporated, fastener length shall conform to penetrate thru bottom of support a minimum of 3/4".

Installation:

Installation Method:
(Refer to **"TABLE A"** below and drawings at the end of this report.)

- Clip Spacing: **Refer to "TABLE A" Below**
  (along the length of the panel)
- Rib Interlock: Mechanically seamed 180° (DOUBLE-LOCK)
- Minimum fastener penetration thru bottom of support, 3/4".
  (through bottom flute of steel deck)
- For panel construction at the end of panels, refer to manufacturer's instructions and any site specific design.

TABLE "A"
"Double-Lock Zee-Lock, 0.032" Aluminum attached to Steel Deck"
ALLOWABLE LOADS

	Clip Spacing	Insulation	Panel Clip Type	Fastener	# Fasteners per Clip	Panel Seam	**Design Pressure (ASD)**
METHOD 1	24"	4" – 6" (max.)	Floating Zee-Clip	#14	2	Double Lock	**- 123.5 PSF**
METHOD 2	6"	4" – 6" (max.)	Floating Zee-Clip	#14	2	Double Lock	**- 236 PSF**

- Allowable design pressure(s) for allowable stress design (ASD).

Install the "Double-Lock Zee-Lock" roof panel assembly in compliance with the installation method listed in this report and applicable code sections of FBC 9th Edition (2026). The installation method described herein is in accordance with the scope of this evaluation report. Refer to manufacturer's installation instructions as a supplemental guide for attachment.

Referenced Data:

1. TAS 125-03 Uplift Test (Per UL580-06 and UL 1897-04)
   By Force Engineering & Testing Inc., Inc. (TST ID: 5328)
   - Report # 49-0002T, 16C,D, Report Date: 1/29/16,
     Test Specimen(s) # C (Method 1), #D (Method 2)
2. Quality Assurance
   UL, LLC (FBC Organization #: QUA 9625)
3. Certification of Independence
   By James L. Buckner, P.E. @ CBUCK Engineering
   (FBC Organization # ANE 1916)

Installation Method
Berridge Manufacturing Company
"Double-Lock Zee-Lock" (0.032" Aluminum) Roof Panel attached to Steel Deck

Drawings

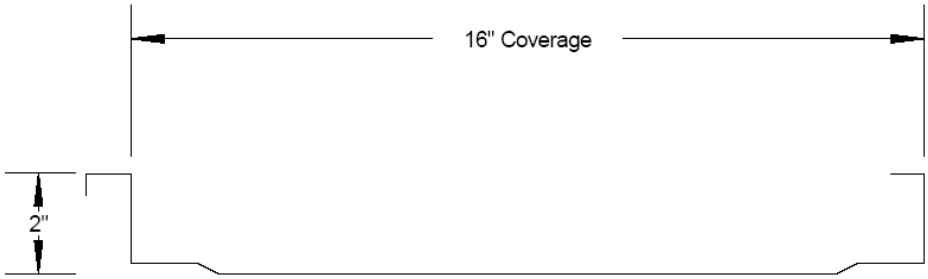

Berridge Double-Lock Zee-Lock
Typical Panel Profile

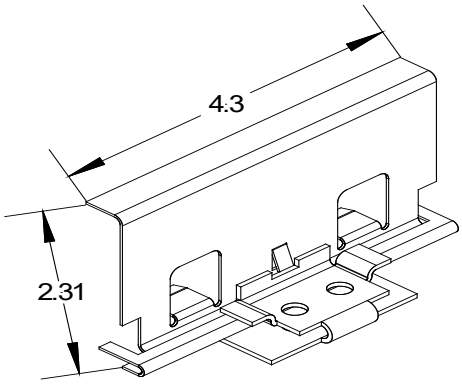

Fully Assembled

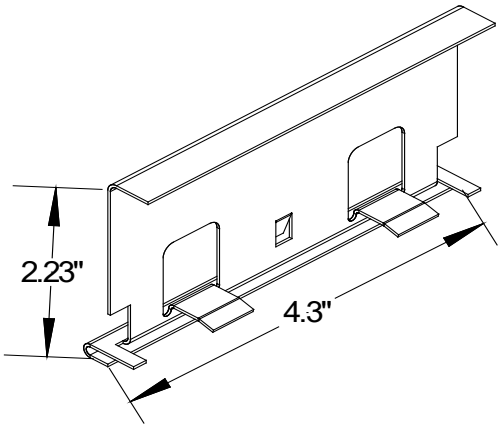

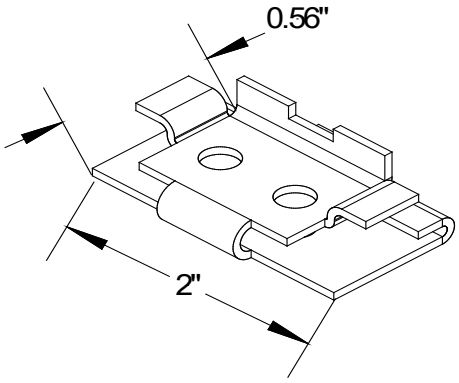

Floating Upper Section **Floating Lower Section**

Berridge Two-Piece Floating Zee-Clip
Typical Clip Profile

Installation Method
Berridge Manufacturing Company
"Double-Lock Zee-Lock" (0.032" Aluminum) Roof Panel attached to Steel Deck

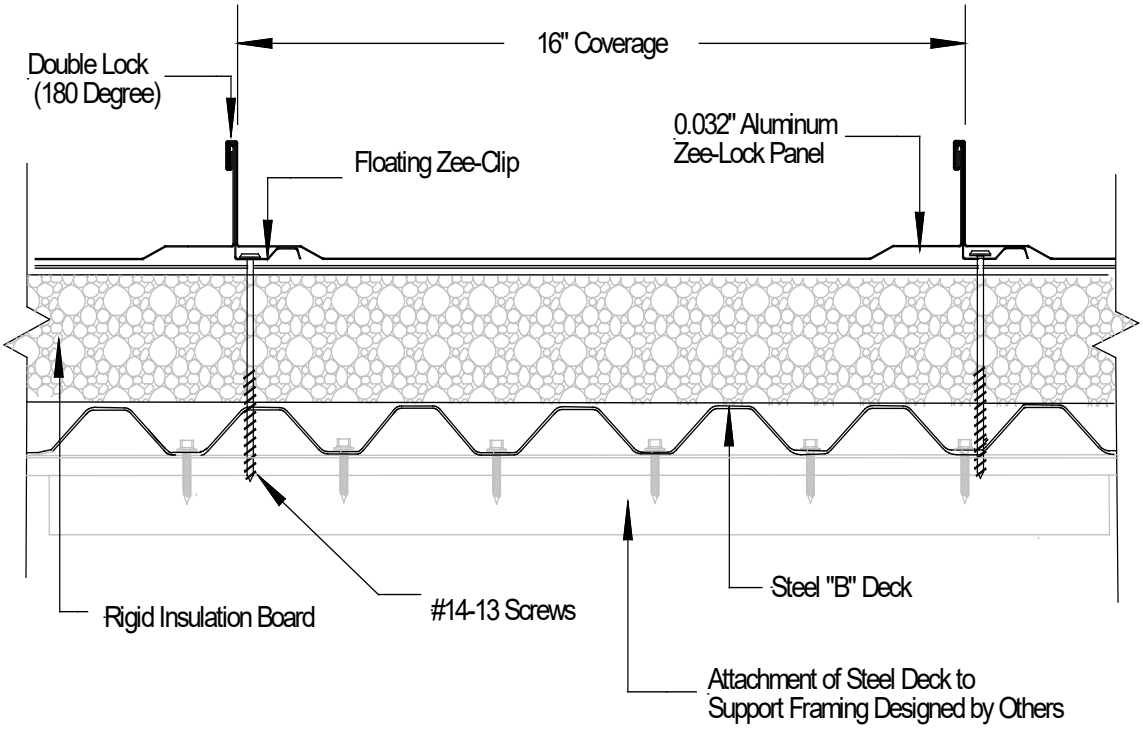

Typical Assembly Profile View
(Typical Fastening Pattern Across Width)

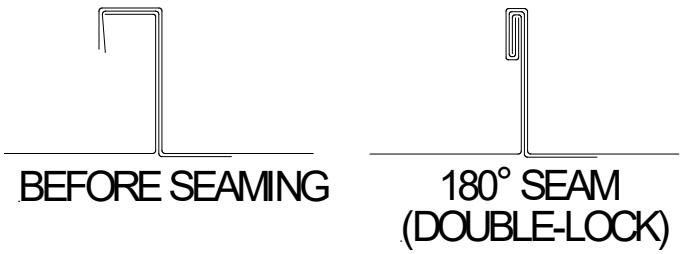

Typical Panel Seams

Installation Method
Berridge Manufacturing Company
"Double-Lock Zee-Lock" (0.032" Aluminum) Roof Panel attached to Steel Deck

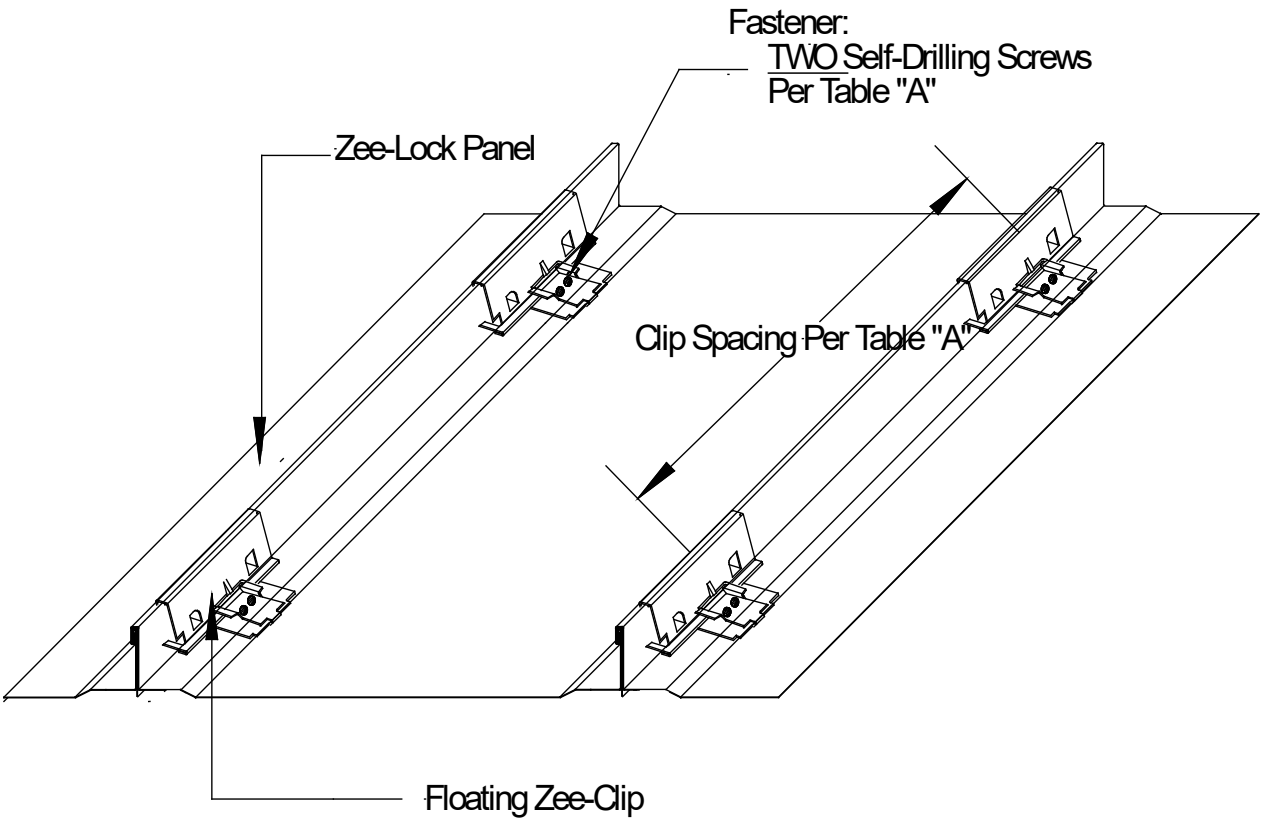

Typical Roof Assembly with Floating Zee-Clip
Isometric View

TABLE "A" **"Double-Lock Zee-Lock, 0.032" Aluminum attached to Steel Deck"** **ALLOWABLE LOADS**							
	Clip Spacing	Insulation	Panel Clip Type	Fastener	# Fasteners per Clip	Panel Seam	**Design Pressure (ASD)**
METHOD 1	24"	4" – 6" (max.)	Floating Zee-Clip	#14	2	Double Lock	**- 123.5 PSF**
METHOD 2	6"	4" – 6" (max.)	Floating Zee-Clip	#14	2	Double Lock	**- 236 PSF**
• Allowable design pressure(s) for allowable stress design (ASD).							