FOUR SEASONS BUILDING PRODUCTS

STEEL ROOF PANELS

0.019" STEEL 3" RHINO RISERS AND 0.019" & 0.024" STEEL TWIN VEE CLEAR SPAN TABLES APPROVED FOR NON-HVHZ AREAS

NON-SITE-SPECIFIC STRUCTURAL PERFORMANCE EVALUATION. A DESIGN PROFESSIONAL SHALL BE RESPONSIBLE FOR CERTIFYING THE APPLICATION OF THIS INFORMATION TO ANY SITE SPECIFIC LOCATION

NOTE REGARDING USE OF THIS DOCUMENT & USE OUTSIDE FLORIDA:
THIS IS A NON-SITE-SPECIFIC STRUCTURAL PERFORMANCE EVALUATION. THIS PRODUCT EVALUATION IS VALID FOR USE IN **FLORIDA ONLY**. USE OF THIS EVALUATION REQUIRES A REVIEW & CERTIFICATION BY A LOCAL DESIGN PROFESSIONAL WHO SHALL BE RESPONSIBLE FOR THE PROPER ADAPTATION OF THIS GENERAL PERFORMANCE EVALUATION TO ANY SITE-SPECIFIC PROJECT. CONTACT THIS OFFICE AT **ENGINEERINGEXPRESS.COM/QUOTE** FOR ASSISTANCE WITH YOUR PROJECT-SPECIFIC NEEDS & FOR ADAPTATION & CERTIFICATION OF THIS DOCUMENT OUTSIDE OF FLORIDA.

ENGINEER SIGNATURE & SEAL NOTICE:
*PRINTED COPIES OF THIS DOCUMENT ARE NOT CONSIDERED SIGNED & SEALED. SIGNATURE MUST BE VERIFIED ON ANY ELECTRONIC COPIES.
***FOR FLORIDA STATEWIDE PRODUCT APPROVALS (FSAs) REGISTERED & APPROVED WITH THE STATE OF FLORIDA:** ORIGINAL, SEALED COPIES OF APPROVED FLORIDA PRODUCT APPROVALS ARE NOT REQUIRED FOR PERMIT.
SEE **ECALC.IO/SEAL** TO LEARN MORE.

FRANK BENNARDO, PE
PE# 0046549 CA# 9885

FRANK L. BENNARDO LICENSE No 0046549 STATE OF FLORIDA PROFESSIONAL ENGINEER

Digitally signed by Frank Bennardo
Date: 2026.08.19 14:57:08 -04'00'

FL# 18464.1

TABLE 1: STEEL 3" RISER RHINO PANEL CLEAR SPANS BY ASD DESIGN PRESSURE

0.019" STEEL PANEL			
MAXIMUM POSITIVE PRESSURE (ASD)	MAX PANEL CLEAR SPAN	MAXIMUM NEGATIVE PRESSURE (ASD)	MAX PANEL CLEAR SPAN
+10 PSF	11' - 2"	-10 PSF	11' - 2"
+15 PSF	11' - 2"	-15 PSF	11' - 2"
+20 PSF	11' - 0"	-20 PSF	10' - 10"
+25 PSF	10' - 8"	-25 PSF	10' - 2"
+30 PSF	10' - 4"	-30 PSF	9' - 5"
+35 PSF	10' - 1"	-35 PSF	8' - 9"
+40 PSF	9' - 9"	-40 PSF	8' - 0"
+45 PSF	9' - 5"	-45 PSF	7' - 4"
+50 PSF	9' - 1"	-50 PSF	6' - 7"
+55 PSF	8' - 10"	-55 PSF	5' - 11"
+60 PSF	8' - 6"	-60 PSF	5' - 2"
+65 PSF	8' - 2"		
+70 PSF	7' - 10"		
+75 PSF	7' - 6"		
+80 PSF	7' - 3"		
+85 PSF	6' - 11"		
+90 PSF	6' - 7"		
+95 PSF	6' - 3"		
+100 PSF	6' - 0"		
+105 PSF	5' - 8"		
+110 PSF	5' - 4"		
+115 PSF	5' - 0"		
+120 PSF	4' - 9"		

TABLE 2: STEEL TWIN VEE PANEL CLEAR SPANS BY ASD DESIGN PRESSURE

0.019" STEEL PANEL				0.024" STEEL PANEL			
MAXIMUM POSITIVE PRESSURE (ASD)	MAX PANEL CLEAR SPAN	MAXIMUM NEGATIVE PRESSURE (ASD)	MAX PANEL CLEAR SPAN	MAXIMUM POSITIVE PRESSURE (ASD)	MAX PANEL CLEAR SPAN	MAXIMUM NEGATIVE PRESSURE (ASD)	MAX PANEL CLEAR SPAN
+10 PSF	11' - 2"	-10 PSF	9' - 0"	+10 PSF	11' - 2"	-10 PSF	10' - 2"
+15 PSF	11' - 2"	-15 PSF	7' - 4"	+15 PSF	11' - 2"	-15 PSF	8' - 3"
+20 PSF	11' - 2"	-20 PSF	6' - 4"	+20 PSF	11' - 2"	-20 PSF	7' - 2"
+25 PSF	10' - 2"	-25 PSF	5' - 8"	+25 PSF	11' - 2"	-25 PSF	6' - 5"
+30 PSF	9' - 4"	-30 PSF	5' - 2"	+30 PSF	10' - 5"	-30 PSF	5' - 10"
+35 PSF	8' - 7"	-35 PSF	4' - 10"	+35 PSF	9' - 8"	-35 PSF	5' - 5"
+40 PSF	8' - 1"	-40 PSF	4' - 6"	+40 PSF	9' - 1"	-40 PSF	5' - 1"
+45 PSF	7' - 7"	-45 PSF	4' - 3"	+45 PSF	8' - 6"	-45 PSF	4' - 9"
+50 PSF	7' - 2"	-50 PSF	4' - 0"	+50 PSF	8' - 1"	-50 PSF	4' - 6"
+55 PSF	6' - 10"	-55 PSF	3' - 10"	+55 PSF	7' - 9"	-55 PSF	4' - 4"
+60 PSF	6' - 7"	-60 PSF	3' - 8"	+60 PSF	7' - 5"	-60 PSF	4' - 1"
+65 PSF	6' - 4"			+65 PSF	7' - 1"		
+70 PSF	6' - 1"			+70 PSF	6' - 10"		
+75 PSF	5' - 10"			+75 PSF	6' - 7"		
+80 PSF	5' - 8"			+80 PSF	6' - 5"		
+85 PSF	5' - 6"			+85 PSF	6' - 2"		
+90 PSF	5' - 4"			+90 PSF	6' - 0"		
+95 PSF	5' - 3"			+95 PSF	5' - 10"		
+100 PSF	5' - 1"			+100 PSF	5' - 8"		
+105 PSF	5' - 1"			+105 PSF	5' - 8"		
+110 PSF	5' - 1"			+110 PSF	5' - 8"		
+115 PSF	5' - 1"			+115 PSF	5' - 8"		
+120 PSF	5' - 1"			+120 PSF	5' - 8"		

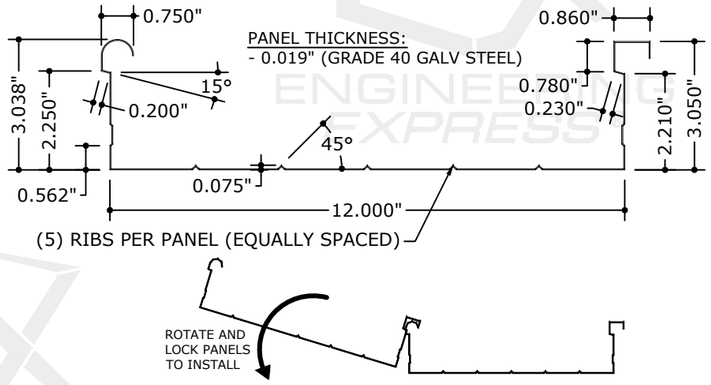

1/1 3" METAL RISER PANELS
N.T.S. SECTION VIEW

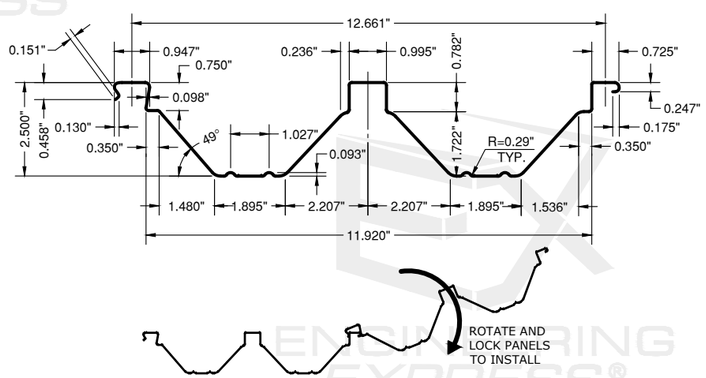

2/1 2.5" TWIN VEE PANELS
N.T.S. SECTION VIEW

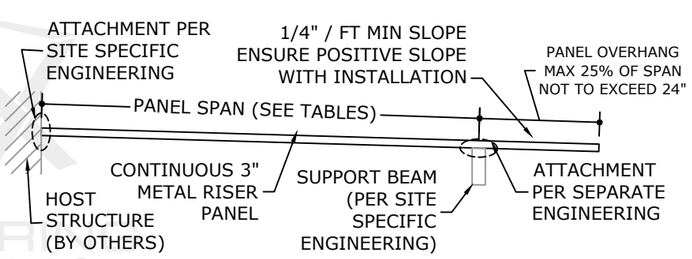

3/1 3" METAL RISER ROOF PANELS
N.T.S. SIDE ELEVATION

TABLE USE INSTRUCTIONS:

1. OBTAIN SITE-SPECIFIC GRAVITY (DOWNWARD) AND UPLIFT (UPWARD) DESIGN PRESSURES, PREPARED BY A DESIGN PROFESSIONAL PER THE GOVERNING CODE FOR THE PROJECT LOCATION. THE LARGER OF THE GRAVITY OR UPLIFT LOAD SHALL BE YOUR CONTROLLING DESIGN VALUE.
2. FOR THE SELECTED PANEL AND OVERHANG CONDITION, READ THE ALLOWABLE SPAN FROM THE TABLE.
3. WHERE A PRESSURE FALLS BETWEEN ROWS, USE THE NEXT HIGHER ROW OR INTERPOLATE LINEARLY.
4. THE SMALLEST OF THE ALLOWABLE DESIGN SPANS GOVERNS THE MAXIMUM ALLOWABLE PANEL SPAN.
5. VERIFY THE PROJECT SPAN DOES NOT EXCEED THE GOVERNING TABLE VALUE.
6. FRONT (BEAM) AND BACK (HOST) CONNECTIONS ARE BY SEPARATE SITE-SPECIFIC DESIGN.
7. FOR PRESSURES AND SPANS BEYOND THE VALUES STATED HEREIN, CONTACT THIS OFFICE FOR SITE-SPECIFIC CONSULTATION.
8. FOR SITE-SPECIFIC ASD DESIGN PRESSURES, VISIT **ENGINEERINGEXPRESS.COM/WIND.**

TABLE NOTES:

1. SPANS ARE BASED ON THE PRODUCT TESTING AND EVALUATION REPORT PER THE GENERAL NOTES.
2. PRESSURES SHALL REFLECT THE CONTROLLING ASCE 7 LOAD COMBINATION (DEAD, LIVE, SNOW, WIND, ETC.), DETERMINED SEPARATELY.
3. THE SPANS LISTED HEREIN ARE APPLICABLE FOR NON-HABITABLE STRUCTURES ONLY.
4. TABLES CONSIDER ASD PRESSURES. FOR ULTIMATE PRESSURES, P(ULT) = P(ASD)*5/3.
5. TABULATED SPANS ARE BASED ON A 1.5 SAFETY FACTOR. WHERE A 2.0 SAFETY FACTOR IS REQUIRED BY THE LOCAL JURISDICTION, IT IS PERMISSIBLE TO MULTIPLY THE TABULATED SPAN VALUES BY *2/3.
6. ALL ROOF PANEL SPANS LISTED HEREIN ASSUME A MAXIMUM DEFLECTION OF L/90.
7. A 0.7x REDUCTION (PER TABLE 1604.3 FOOTNOTE f) APPLIES TO DEFLECTION ONLY, UNLESS NOTED.
8. MAXIMUM PANEL OVERHANGS SHALL BE AS FOLLOWS:
   - OVERHANG FOR DESIGN PRESSURES ABOVE +/- 45 PSF = 12.0" MAXIMUM (ON EITHER SIDE OF PANEL)
   - NO MORE THAN 25% OF CLEAR SPAN (ON EITHER END OF PANEL (NOT TO EXCEED 24")

GENERAL NOTES

1. THE DESIGN PRESSURE VALUES LISTED IN THE TABLES HEREIN ARE ALLOWABLE (ASD) PRESSURES.
2. THIS PRODUCT IS APPROVED FOR NON-HABITABLE (CATEGORY I) STRUCTURES ONLY.
3. A 300LB POINT LOAD HAS NOT BEEN CONSIDERED IN THESE CALCULATIONS DUE TO THE NATURE OF THE INTENDED APPLICATION. END USER SHALL BE NOTIFIED THAT PANELS ARE NOT DESIGNED FOR HUMAN LOADING.
4. STEEL RISER PANELS SHALL BE OF MINIMUM GRADE 40, AZ 50 GALVALUME STEEL & HAVE A MINIMUM YIELD STRENGTH OF Fy = 40 KSI MINIMUM AND A MINIMUM THICKNESS OF 0.019".
5. THE SYSTEM DESCRIBED HEREIN HAS BEEN DESIGNED AND TESTED PER ASTM E330 (TEST REPORT #'S F7038.01-401-44-R0 & F7038.02-401-44-R0 BY ARCHITECTURAL TESTING, INC.) IN ACCORDANCE WITH THE FLORIDA BUILDING CODE, NINTH EDITION (2026)
6. PANELS APPROVED FOR USE OUTSIDE THE HIGH VELOCITY HURRICANE ZONE (HVHZ)
7. SITE SPECIFIC POSITIVE AND NEGATIVE DESIGN PRESSURES (ASD) CALCULATED FOR USE WITH THIS SYSTEM SHALL BE DETERMINED SEPARATELY PER ASCE 7 AND THE REFERENCED BUILDING CODE. DESIGN PRESSURES MUST BE LESS THAN OR EQUAL TO THE POSITIVE AND NEGATIVE DESIGN PRESSURES LISTED HEREIN.
8. THE SYSTEM DETAILED HEREIN IS GENERIC AND DOES NOT PROVIDE INFORMATION FOR A SPECIFIC SITE. FOR SITE CONDITIONS DIFFERENT FROM THE CONDITIONS DETAILED HEREIN, A LICENSED ENGINEER OR REGISTERED ARCHITECT SHALL PREPARE SITE SPECIFIC DOCUMENTS FOR USE IN CONJUNCTION WITH THIS DOCUMENT.
9. THESE INSTALLATION INSTRUCTIONS ARE PART OF A PRODUCT APPROVAL EVALUATION AND SHALL ONLY BE USED IN CONJUNCTION WITH THE EVALUATION REPORT SUBMITTED FOR THE SAME PRODUCT APPROVAL.
10. PERMIT HOLDER SHALL VERIFY THE ADEQUACY OF THE EXISTING STRUCTURE TO WITHSTAND SUPERIMPOSED LOADS. BRICK VENEER PER ASTM C62 (BY OTHERS) SHALL BE ANCHORED PROPERLY TO TRANSFER ANY APPLICABLE LOADS TO THE EXISTING HOST STRUCTURE.
11. ALL PANEL ATTACHMENTS SHALL BE CERTIFIED PER SEPARATE ENGINEERING ON A SITE SPECIFIC BASIS.REFER TO FASTENER MANUFACTURER'S PUBLISHED DATA SHEETS AND RECOMMENDATIONS FOR FASTENER INSTALLATION INSTRUCTIONS.
12. FOR PERMANENT OUTDOOR INSTALLATIONS, ALL EXPOSED ANCHORS, FASTENERS, CONNECTORS, AND METAL PLATES SHALL BE CORROSION RESISTANT. CORROSION RESISTANCE MAY BE PROVIDED BY INHERENT MATERIAL COMPOSITION OR, WHERE PERMITTED BY CODE, BY AN APPROVED PROTECTIVE COATING OR GALVANIZATION. WHERE APPLICABLE NEAR A SALTWATER COASTLINE, SUCH COMPONENTS SHALL COMPLY WITH FBC SECTION 1711, INCLUDING APPLICABLE REQUIREMENTS FOR EXPOSED, PROTECTED, OR ENCLOSED CONDITIONS. MATERIALS, COATINGS, AND FINISHES SHALL BE COMPATIBLE WITH CONNECTED MATERIALS, AND PROTECTIVE COATINGS SHALL BE CONTINUOUS OVER EXPOSED SURFACES. FASTENERS USED WITH ALUMINUM MEMBERS SHALL ALSO COMPLY WITH SECTION J.3.7.2 OF THE ALUMINUM DESIGN MANUAL, "SPECIFICATION FOR ALUMINUM STRUCTURES." SUBSTITUTION OF COMPONENTS FROM ALTERNATE MANUFACTURERS, OR WITH DIFFERENT MATERIALS, COATINGS, OR FINISHES, SHALL NOT BE ASSUMED EQUIVALENT AND MAY REQUIRE ADDITIONAL ENGINEERING REVIEW OR SITE-SPECIFIC ANALYSIS.
13. CONTRACTOR IS RESPONSIBLE TO INSULATE OR PROTECT ALL MEMBERS FROM DISSIMILAR MATERIALS TO PREVENT ELECTROLYSIS.
14. THE CONTRACTOR IS RESPONSIBLE FOR WATER/WEATHER PROOFING MATERIALS AND INSTALLATION SUCH AS FLASHING, CAULKING, ETC.
15. ENGINEER SEAL AFFIXED HERETO VALIDATE STRUCTURAL DESIGN AS SHOWN ONLY. USE OF THIS SPECIFICATION BY CONTRACTOR, et. al. INDEMNIFIES & SAVES HARMLESS THIS ENGINEER FOR ALL COST & DAMAGES INCLUDING LEGAL FEES & APPELLATE FEES RESULTING FROM MATERIAL FABRICATION, SYSTEM ERECTION, & CONSTRUCTION PRACTICES BEYOND THAT WHICH IS CALLED FOR BY LOCAL, STATE & FEDERAL CODES & FROM DEVIATIONS OF THIS PLAN.
16. ALTERATIONS ADDITIONS OR OTHER MARKINGS TO THIS DOCUMENT ARE NOT PERMITTED AND INVALIDATE THIS CERTIFICATION.
17. EXCEPT AS EXPRESSLY PROVIDED HEREIN, NO ADDITIONAL CERTIFICATIONS OR AFFIRMATIONS ARE INTENDED.

VISIT ECALC.IO/FOURSEASONS
FOR SITE SPECIFIC DEVIATIONS & MORE INFORMATION ABOUT THIS DOCUMENT OR SCAN THIS QR CODE
VISIT **ENGINEERINGEXPRESS.COM/FOURSEASONS** FOR ADDITIONAL PLANS, REPORTS & RESOURCES

ENGINEERING EXPRESS®
POSTAL ADDRESS:
2234 NORTH FEDERAL HWY #7664
BOCA RATON, FL 33431
ENGINEERINGEXPRESS.COM

FOUR SEASONS BUILDING PRODUCTS
7815 AMERICAN WAY
GROVELAND, FL 34736
(352) 787 - 7766

STEEL ROOF RISER & TWIN VEE PANELS
FLORIDA BUILDING CODE NINTH EDITION (2026)
FLORIDA STATEWIDE APPROVAL (FSA FL#18464.1)

REMARKS	DRWN	CHKD	DATE
2020 FBC (20-32086)	CCB	RWN	9/29/20
2023 FBC (23-60179)	MLD	CCB	7/27/23
2026 FBC UPDATE	NRD	RMS	08/10/26

COPYRIGHT ENGINEERING EXPRESS®

26-100287

SCALE: NTS UNLESS NOTED

1 OF 1

8/17/2026 10:46 AM COLBYBENNARDOPE w:\shared\projects\26-\26-100287 2026 product fbc update fl18464\work\2026 fbc\2 - drawings & cad\26-100287c - fl18464.1 - dwg.dwg