SINGLE HUNG - LARGE MISSILE IMPACT

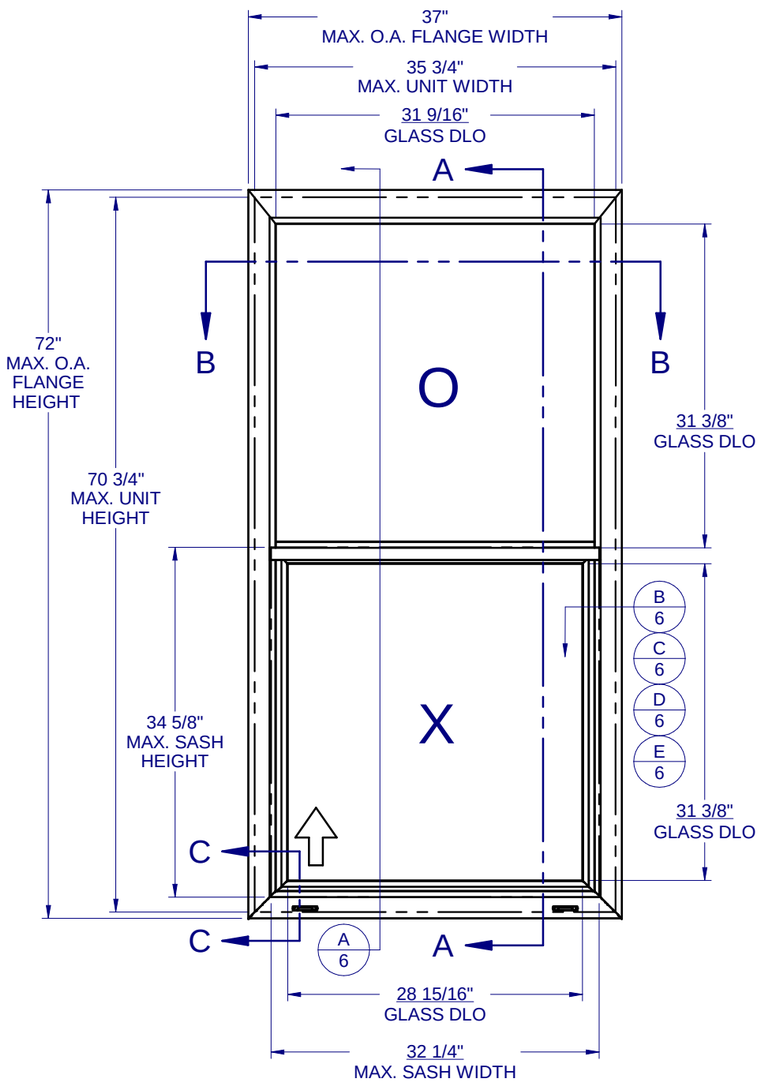

GENERAL NOTES:

1. THE PRODUCT SHOWN HEREIN IS DESIGNED AND MANUFACTURED TO COMPLY WITH THE FLORIDA BUILDING CODE (FBC), CURRENT EDITION INCLUDING THE HIGH VELOCITY HURRICANE ZONE (HVHZ) AND IS RATED FOR WIND ZONE 4 MISSILE LEVEL D IMPACT USE AS DEFINED IN ASTM E 1996 PER THE FBC.

2. GLAZING OPTIONS: (SEE SHEET 2)

3. CONFIGURATIONS: "O/X".

4. DESIGN PRESSURE RATING:
   -NEGATIVE DESIGN LOADS BASED ON, TESTED PRESSURE AND GLASS TABLES ASTM E-1300.
   -POSITIVE DESIGN LOADS BASED ON, TESTED PRESSURE, WATER INFILTRATION TEST PRESSURE AND GLASS TABLES ASTM E-1300.
   -DESIGN LOADS ARE BASED ON ALLOWABLE STRESS DESIGN, ASD.

5. ANCHORAGE: THE 33 1/3% STRESS INCREASE HAS NOT BEEN USED IN THE DESIGN OF THIS PRODUCT. SEE SHEET 6 FOR ANCHOR DETAILS. WINDLOAD DURATION FACTOR Cd=1.6 WAS USED FOR WOOD ANCHOR CALCULATIONS.

6. PRODUCT APPROVED FOR IMPACT RESISTANCE. SHUTTERS ARE NOT REQUIRED.

7. ALL FRAMES AND VENTS FULLY WELDED. SMALL JOINT SEAM SEALANT USED AT FIXED MEETING RAIL AND JAMB.

8. THE DESIGNATION X AND O STAND FOR THE FOLLOWING:
   X = OPERABLE SASH, O = FIXED SASH

9. SECTION CALLOUTS APPLY TO ALL ELEVATIONS IN A SIMILAR LOCATION.

10. WEEP SLOTS = 1/4" x 1-1/4" LOCATED 4" FROM BOTH ENDS.

Lucas Turner
2026.09.21
15:58:35
-05'00'

TABLE OF CONTENTS

GENERAL NOTES & ELEVATIONS.....1
GLAZING DETAILS.....2
SECTION VIEWS.....3
BOM AND EXTRUSIONS.....4
ANCHOR SCHEDULE & NOTES.....5
INSTALLATION DETAILS.....6

FRAME TYPE	MAX. UNIT SIZE	DESIGN PRESSURE RATING	IMPACT RATING
FLANGE	35-3/4" x 70-3/4"	+/- 70 PSF	LARGE MISSILE IMPACT
FIN		+/- 65 PSF	

CWS
1900 SW 44TH AVE.
OCALA, FLORIDA 34474
WWW.CWS.CC

VSH05

8100 PVC SINGLE HUNG IMPACT

PROPRIETARY AND CONFIDENTIAL
THE INFORMATION CONTAINED IN THIS DRAWING IS THE SOLE PROPERTY OF CUSTOM WINDOW SYSTEMS, INC. ANY REPRODUCTION IN PART OR AS A WHOLE WITHOUT THE WRITTEN PERMISSION OF CUSTOM WINDOW SYSTEMS, INC IS PROHIBITED.

FLORIDA APPROVAL NO.:
17647

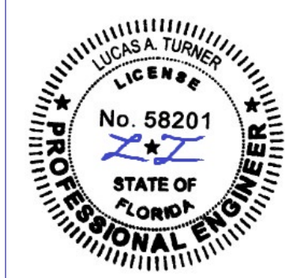

9/21/2026

LUCAS A. TURNER, P.E.
FL PE # 58201
Turner Engineering & Consulting, Inc.
2428 Old Natchez Trc Trl
Camden, TN 38320
PH. 941-380-1574

SHEET DESCRIPTION:
GENERAL NOTES AND ELEVATIONS

DRAWN BY:	DATE:
MCS	8/25/2026
DWG #: CWS-958	REV.: G
SCALE: 1:15	SHEET 1 OF 6

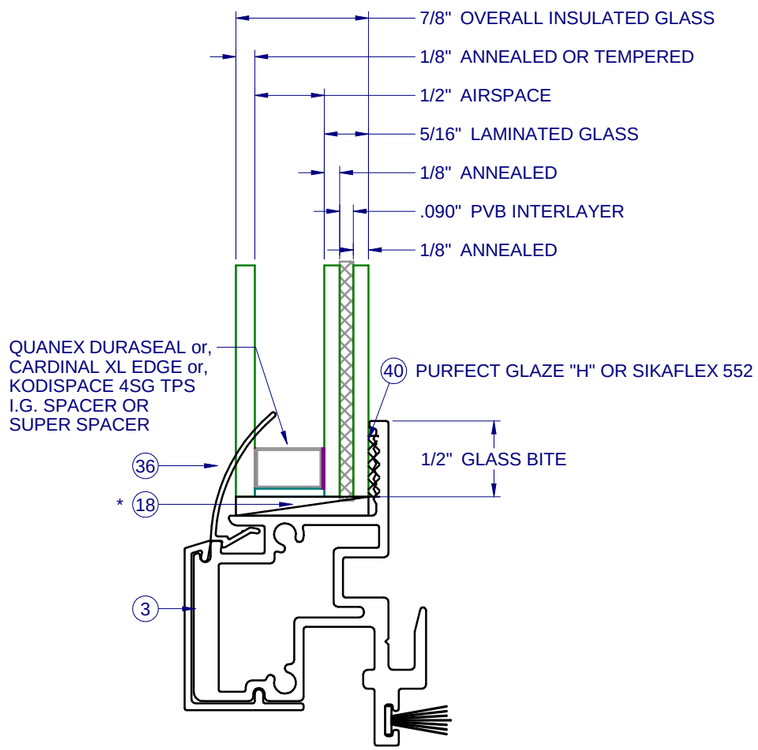

FIXED LITE

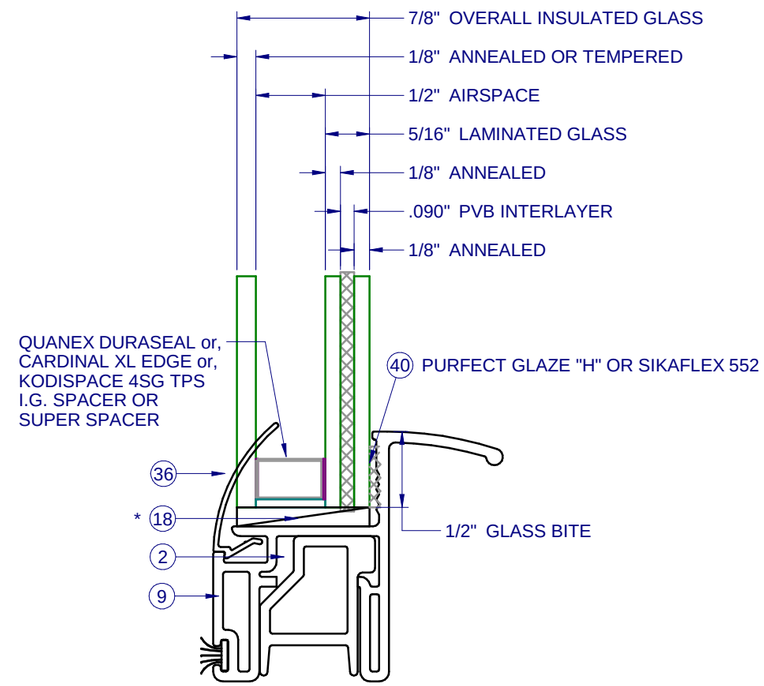

SASH LITE

NOTES:
-WHEN SACRAFICIAL LITE IS TEMPERED AND AS INDICATED IN THIS APPROVAL GLASS IS SGCC CERTIFIED TO ANSI Z97.1 AND CPSC 16 CFR 1201, TO BE FIELD VERIFIED BY PERMANENT ETCHING MARK ON EACH GLASS LITE.

* SETTING BLOCKS PER FBC 2411.3.3.1

CWS
1900 SW 44TH AVE.
OCALA, FLORIDA 34474
WWW.CWS.CC

VSH05

8100 PVC SINGLE HUNG IMPACT

PROPRIETARY AND CONFIDENTIAL
THE INFORMATION CONTAINED IN THIS DRAWING IS THE SOLE PROPERTY OF CUSTOM WINDOW SYSTEMS, INC. ANY REPRODUCTION IN PART OR AS A WHOLE WITHOUT THE WRITTEN PERMISSION OF CUSTOM WINDOW SYSTEMS, INC IS PROHIBITED.

FLORIDA APPROVAL NO.:
17647

9/21/2026

LUCAS A. TURNER, P.E.
FL PE # 58201
Turner Engineering & Consulting, Inc.
2428 Old Natchez Trc Trl
Camden, TN 38320
PH. 941-380-1574

SHEET DESCRIPTION:
GLAZING DETAILS

DRAWN BY:	DATE:
MCS	8/25/2026
DWG #:	REV.:
CWS-958	G
SCALE:	
1:1	SHEET 2 OF 6

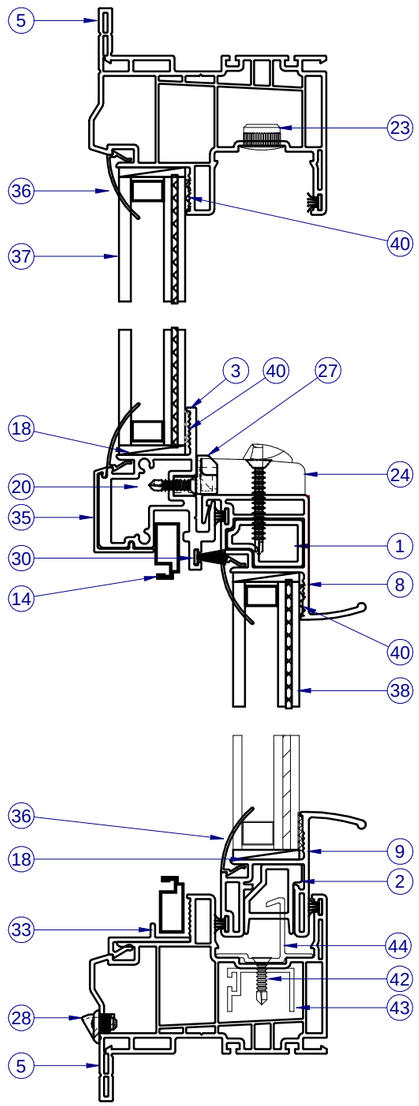

INTERIOR

SECTION VIEW A-A

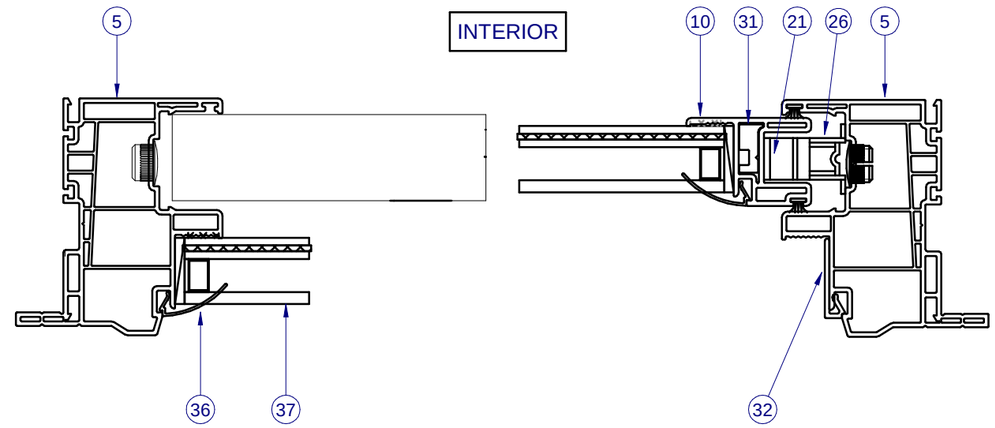

INTERIOR

SECTION VIEW B-B

NOTE: LEFT SIDE SHOWS FIXED SECTION VIEW,
RIGHT SIDE SHOWS SASH SECTION VIEW.

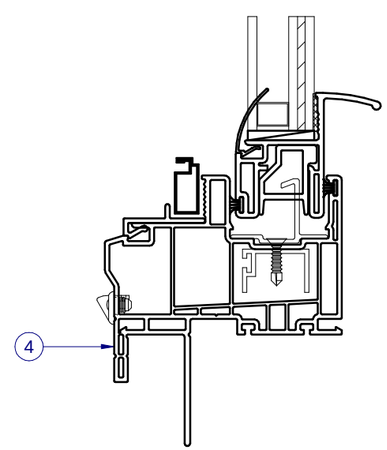

SECTION VIEW C-C
ALTERNATE FRAME
FLANGE WITH FIN

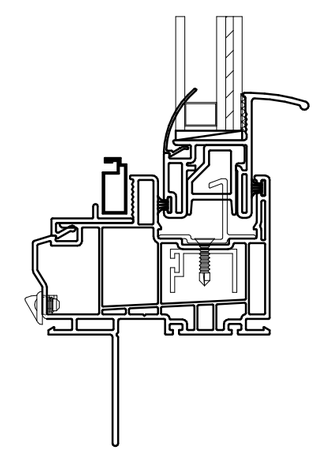

SECTION VIEW C-C
ALTERNATE FIN ONLY FRAME

CWS
1900 SW 44TH AVE.
OCALA, FLORIDA 34474
WWW.CWS.CC

VSH05

8100 PVC SINGLE HUNG IMPACT

PROPRIETARY AND CONFIDENTIAL
THE INFORMATION CONTAINED IN THIS DRAWING IS THE SOLE PROPERTY OF CUSTOM WINDOW SYSTEMS, INC. ANY REPRODUCTION IN PART OR AS A WHOLE WITHOUT THE WRITTEN PERMISSION OF CUSTOM WINDOW SYSTEMS, INC IS PROHIBITED.

FLORIDA APPROVAL NO.:
17647

LUCAS A. TURNER
LICENSE
No. 58201
STATE OF FLORIDA
PROFESSIONAL ENGINEER

9/21/2026

LUCAS A. TURNER, P.E.
FL PE # 58201
Turner Engineering & Consulting, Inc.
2428 Old Natchez Trc Trl
Camden, TN 38320
PH. 941-380-1574

SHEET DESCRIPTION:
SECTION VIEWS

DRAWN BY:	DATE:
MCS	8/25/2026
DWG #: CWS-958	REV.: G
SCALE: 1:2	SHEET 3 OF 6

PARTS LIST			
ITEM	PART #	DESCRIPTION	MATERIAL
1	H-2124	Reinforcement for STR	ALUMINUM
2	H-2123	Reinforcement for SBR	ALUMINUM
3	H-2121	Alum. Fixed Meet. Rail	ALUMINUM
4	H-6231	Main Frame, Fin, Single Hung	PVC
5	H-6222	Frame Head, Flg, Single Hung	PVC
8	H-6224	Sash Top Rail	PVC
9	H-6223	Sash Bottom Rail	PVC
10	H-6225	Sash Side Rail	PVC
11	P-4755	Screen Corner Key W/ Safety Pull Tab	STEEL
12	P-3195	SPRING, NO HOLE TENSION	STEEL
14	P-3218	Screen Frame	ALUMINUM
15	P-5576	Screen Spline, .125"	VINYL FOAM
16	P-4754	SCREEN CORNER KEY	NYLON
17	P-3342	Seam Sealer	
18	P-5612	Setting Block, .12 x 1 x 2	RUBBER
19	P-3305	Wstp., 0.270 x 0.187 High Density	NYLON
20	P-3539	#8 x 3/4" Phillips Square SMS	STEEL
21	P-3541	#8 x 1/2" Quadrex PH TEK	STEEL
22	P-4770	30"- BetterVue Insect Screen, 18x16	VINYL
23	P-5588	Hole Plug, 1/2"	NYLON
24	P-3783	Lock, Impact	
25	P-4051	#8 x 1 1/4" Ph Fh TEK, Wht.	STEEL
26	P-4056	Sash Cam	NYLON
27	P-4069	Keeper, Impact	ZAMAC
28	P-4479	WEEP HOLE COVER	PVC
29	P-4638	#8 x 2 1/2 Phil Truss SMS	STEEL
30	P-4959	Wstp., 0.420 x 0.187 High Density	NYLON
31	S-2129	Reinforcement for SSR	ALUMINUM
32	S-6226	Screen Adaptor, Sill	PVC
33	S-6227	Screen Adaptor, Jamb	PVC
34	S-5087	SASH STOP	PVC
35	S-6228	Fixed Rail Cover	PVC
36	S-6237	Glazing Bead	PVC
37	FIXED	SEE SHEET 2	GLASS
38	SASH	SEE SHEET 2	GLASS
39		SASH BALANCE	STEEL
40		Purfect Glaze "H" or Sikaflex 552	SILICONE
41		#10 x 2" Pan Phil sms	STEEL
42	P-3748	#6 x 5/8" Phillips FH TEK	STEEL
43	S-1112	Reinforcement, Hook	ALUMINUM
44	S-1577	Frame Hook	ALUMINUM

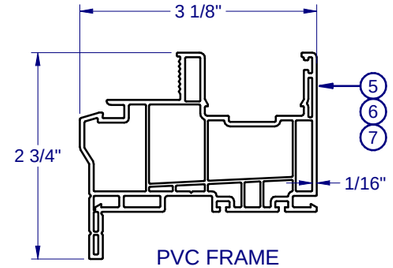

PVC FRAME FLANGE H-6222

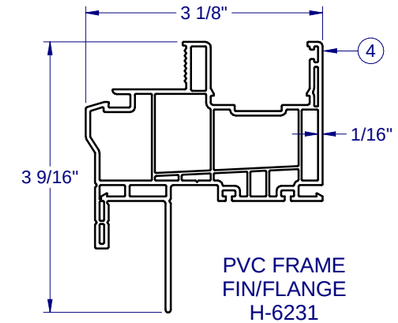

PVC FRAME FIN/FLANGE H-6231

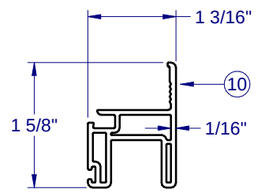

PVC SASH RAIL/STILE H-6225

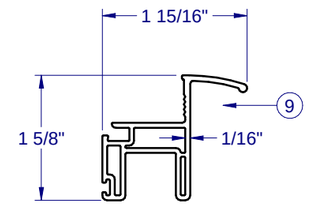

PVC SASH PULL RAIL/STILE H-6223

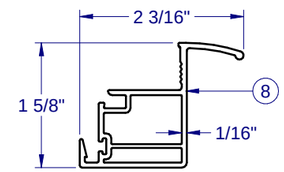

PVC SASH MTG RAIL H-6224

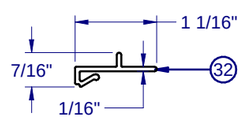

PVC SCREEN CATCH S-6226

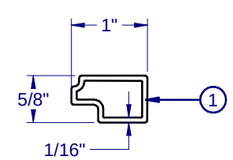

REINF. SASH MTG RAIL H-2124

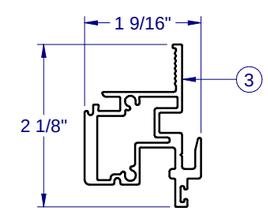

MTG RAIL H-2121

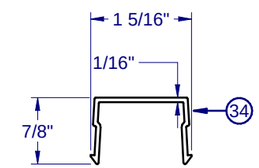

PVC SASH STOP S-5087

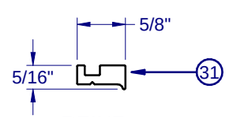

REINF. S-2129

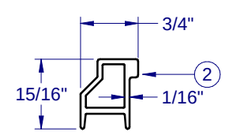

REINF. H-2123

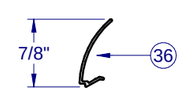

PVC GLAZING BEAD S-6237

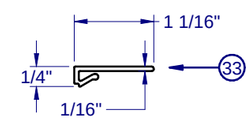

PVC SCREEN SUPPORT S-6227

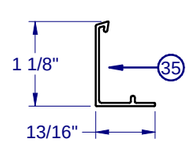

PVC MTG RAIL COVER S-6228

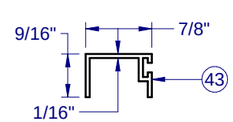

ALUM. REINF. HOOK - S-1112

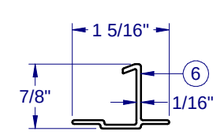

IMPACT HOOK S-1577

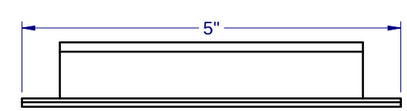

NOTE: ALL ALUMINUM EXTRUSIONS ARE 6063-T6 UNLESS OTHERWISE NOTED.

FRAME CORNER CONSTRUCTION

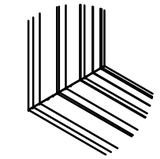

CORNER WELD (ALL SIDES) 1:8

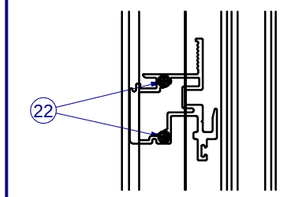

FIXED MEETING RAIL SCREWED TOGETHER WITH OUTERFRAME 1:8

CWS
1900 SW 44TH AVE.
OCALA, FLORIDA 34474
WWW.CWS.CC

VSH05

8100 PVC SINGLE HUNG IMPACT

PROPRIETARY AND CONFIDENTIAL
THE INFORMATION CONTAINED IN THIS DRAWING IS THE SOLE PROPERTY OF CUSTOM WINDOW SYSTEMS, INC. ANY REPRODUCTION IN PART OR AS A WHOLE WITHOUT THE WRITTEN PERMISSION OF CUSTOM WINDOW SYSTEMS, INC IS PROHIBITED.

FLORIDA APPROVAL NO.: 17647

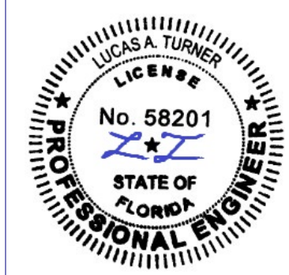

9/21/2026

LUCAS A. TURNER, P.E.
FL PE # 58201
Turner Engineering & Consulting, Inc.
2428 Old Natchez Trc Trl
Camden, TN 38320
PH. 941-380-1574

SHEET DESCRIPTION: BOM AND EXTRUSIONS

DRAWN BY:	DATE:
MCS	8/25/2026
DWG #: CWS-958	REV.: G
SCALE: 1:2	SHEET 4 OF 6

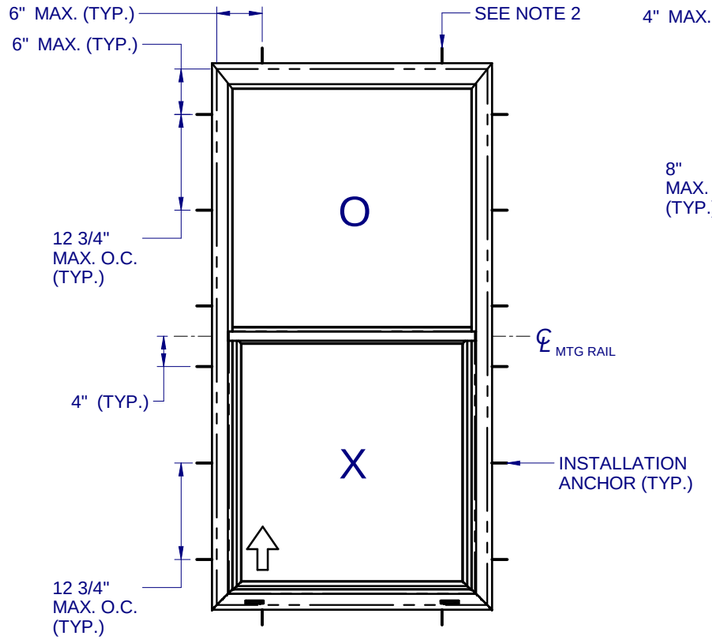

ANCHOR LAYOUT - (FLANGE)
DP +/- 70 PSF

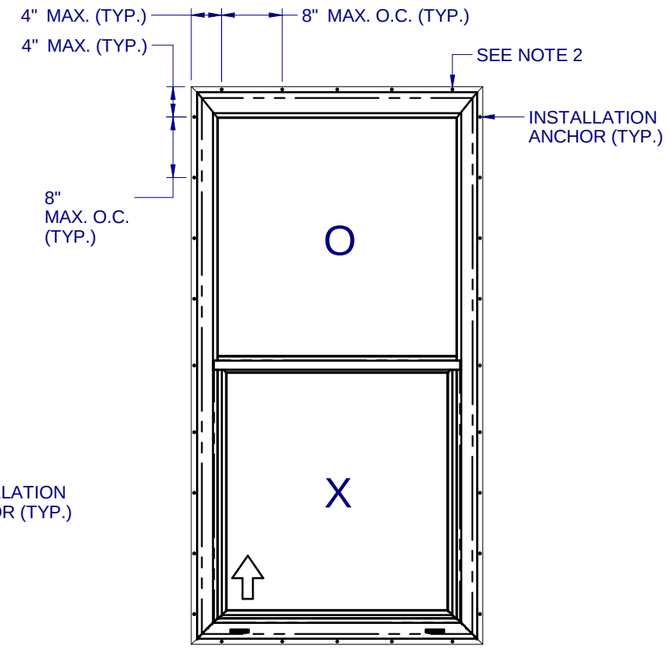

ANCHOR LAYOUT - (FIN)
DP +/- 65 PSF

NOTES:

1. INSTALL ONE ANCHOR AT EACH INSTALLATION LOCATION. SILL ANCHOR SPACING SAME AS HEAD.

2. SHIM AS REQ AT EACH INSTALLATION ANCHOR USING LOAD BEARING SHIMS. MAX. ALLOWABLE SHIM STACK TO BE 1/4". USE SHIMS WHERE SPACE GREATER THAN 1/16" IS PRESENT. LOAD BEARING SHIMS SHALL BE CONSTRUCTED OF HIGH DENSITY PLASTIC OR BETTER. WOOD SHIMS ARE NOT ALLOWED.

3. ANCHOR TYPE, SIZE, SPACING AND EMBEDMENT SHALL BE AS SPECIFIED IN THESE DRAWINGS, SEE TABLE 1, SHEET 6.

4. ALL INSTALLATION ANCHORS MUST BE MADE OF OR PROTECTED WITH A CORROSION RESISTANT MATERIAL OR COATING. DISSIMILAR METALS OR MATERIALS IN CONTACT WITH PRESSURE TREATED WOOD MUST BE PROTECTED TO PREVENT REACTION.

5. INSTALLATION ANCHORS SHALL BE IN ACCORDANCE WITH ANCHOR MANUFACTURER'S INSTALLATION INSTRUCTIONS, AND ANCHORS SHALL NOT BE USED IN SUBSTRATES WITH STRENGTHS LESS THAN THE MINIMUM SPECIFIED IN TABLE 1, SHEET 6.

6. ANCHOR EMBEDMENT TO SUBSTRATE SHALL BE BEYOND WALL DRESSING OR STUCCO. FOR CONCRETE/CMU OPENINGS, EMBEDMENT SHALL BE BEYOND WOOD BUCKS, IF USED, INTO SUBSTRATE. INSTALLATIONS TO SOLID CONCRETE OR GROUT-FILLED CMU MAY INCLUDE BUT DO NOT REQUIRE 1X WOOD BUCKS BETWEEN THE PRODUCT AND THE SUBSTRATE. INSTALLATIONS TO HOLLOW CMU REQUIRE THE USE OF 1X BUCKS BETWEEN THE PRODUCT AND SUBSTRATE.

7. A MINIMUM CENTER-TO-CENTER SPACING SHALL BE MAINTAINED BETWEEN ALL FASTENERS: 3" FOR MASONRY, 1" FOR WOOD AND METAL.

8. WOOD OR MASONRY OPENINGS, BUCKS AND BUCK FASTENERS SHALL BE PROPERLY DESIGNED BY THE ARCHITECT OR ENGINEER OF RECORD AND INSTALLED TO TRANSFER WIND LOADS TO THE STRUCTURE. SUBSTRATES SHALL MEET THE MINIMUM STRENGTH REQUIREMENTS AS SHOWN IN TABLE1, SHEET 6. CONCRETE AND MASONRY SUBSTRATES MAY NOT BE CRACKED.

9. SEALING AND FLASHING STRATEGIES FOR OVERALL WATER RESISTANCE OF INSTALLATION SHALL BE DONE BY OTHERS FOLLOWING THE CURRENT VERSION OF THE REFERENCE DOCUMENTS: FMA/AAMA 100(FIN WINDOWS), FMA/AAMA 200(FLANGE WINDOWS), FMA/WDMA 250(BOX WINDOWS), FMA/AAMA/WDMA 300(EXTERIOR DOORS)

CWS
1900 SW 44TH AVE.
OCALA, FLORIDA 34474
WWW.CWS.CC

VSH05

8100 PVC SINGLE HUNG IMPACT

PROPRIETARY AND CONFIDENTIAL
THE INFORMATION CONTAINED IN THIS DRAWING IS THE SOLE PROPERTY OF CUSTOM WINDOW SYSTEMS, INC. ANY REPRODUCTION IN PART OR AS A WHOLE WITHOUT THE WRITTEN PERMISSION OF CUSTOM WINDOW SYSTEMS, INC IS PROHIBITED.

FLORIDA APPROVAL NO.:
17647

9/21/2026

LUCAS A. TURNER, P.E.
FL PE # 58201
Turner Engineering & Consulting, Inc.
2428 Old Natchez Trc Trl
Camden, TN 38320
PH. 941-380-1574

SHEET DESCRIPTION:
ANCHOR SCHEDULE AND NOTES

DRAWN BY:	DATE:
MCS	8/25/2026
DWG #: CWS-958	REV.: G
SCALE: 1:20	SHEET 5 OF 6

TYPICAL HEAD ANCHORAGE

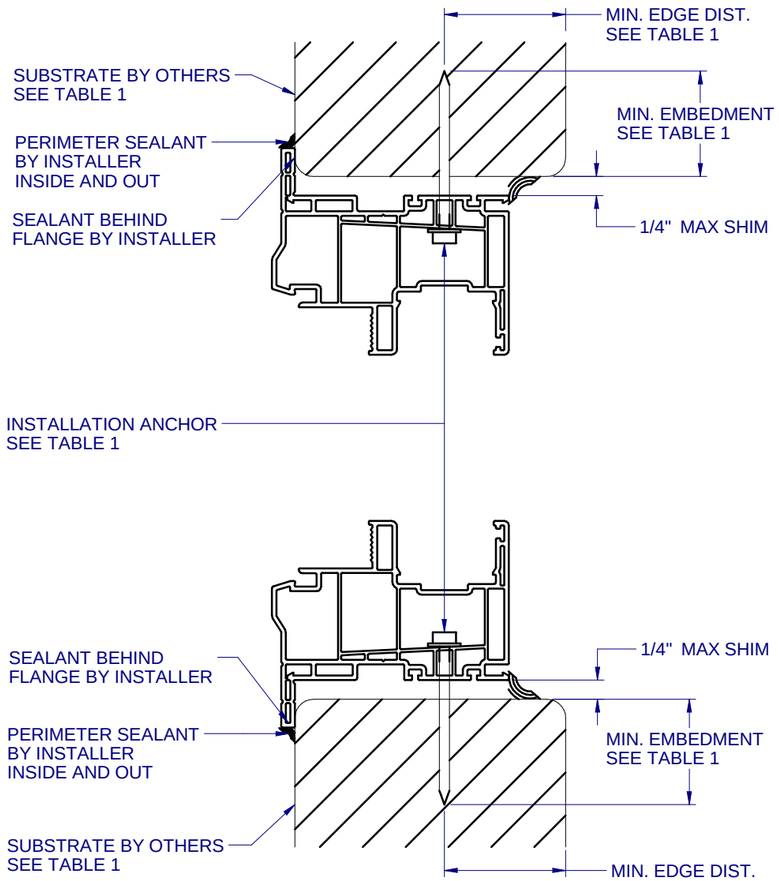

A / 6 VERTICAL SECTION
TYPICAL SILL ANCHORAGE

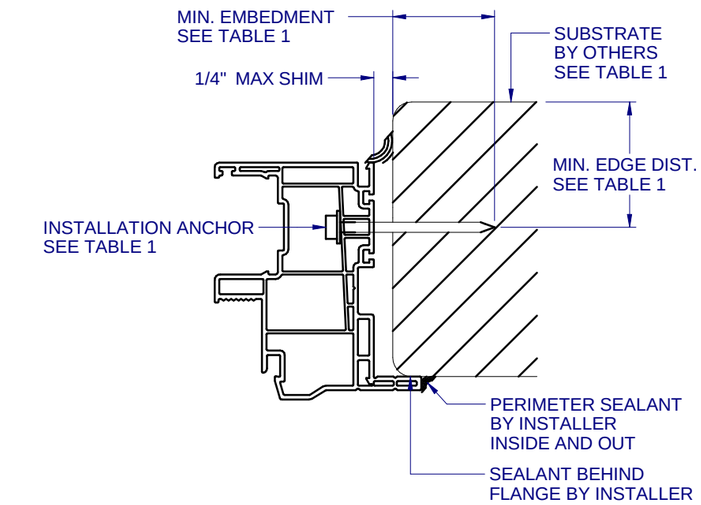

B / 6 HORIZONTAL SECTION
TYPICAL JAMB ANCHORAGE

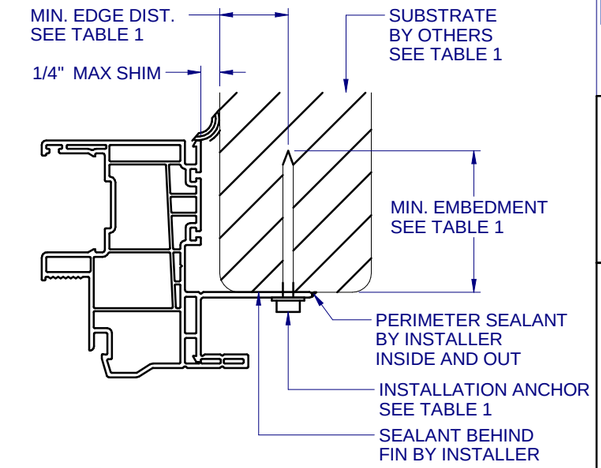

C / 6 HORIZONTAL SECTION
TYPICAL FIN ANCHORAGE
HEAD AND SILL SIMILAR FOR FIN INSTALLATION

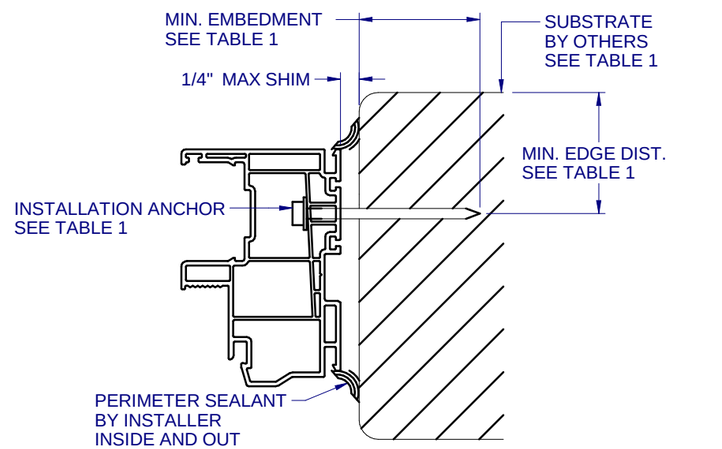

D / 6 HORIZONTAL SECTION
BOX FRAME INSTALLATION
HEAD AND SILL SIMILAR FOR BOX INSTALLATION

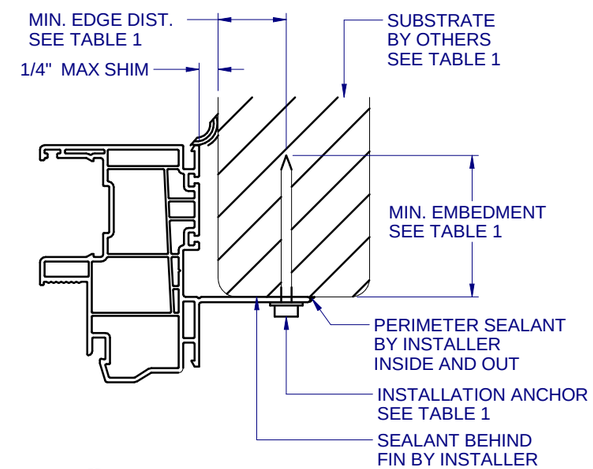

E / 6 HORIZONTAL SECTION
TYPICAL FIN ANCHORAGE
HEAD AND SILL SIMILAR FOR FIN INSTALLATION

FOR INSTALLATIONS WITHIN 3,000 FEET OF A SALTWATER COASTLINE, ANCHORAGE MUST BE REVIEWED FOR COMPLIANCE WITH FBC SECTION 1711 OR SECTION R332 OF THE FLORIDA RESIDENTIAL CODE. REFER TO THE CORRESPONDING EVALUATION REPORT OF THIS APPROVAL FOR ADDITIONAL INFORMATION.

TABLE 1: APPROVED INSTALLATION FASTENERS

FRAME TYPE	SUBSTRATE TYPE	ANCHOR TYPE	MIN. EMBEDMENT	MIN. EDGE DIST.
FLANGE	CONCRETE (2.0 KSI MIN.)	3/16" ITW TAPCON	1-1/2"	1-1/8"
FLANGE	HOLLOW OR GROUT-FILLED CMU (117 PCF MIN.)	3/16" ITW TAPCON	1"	2"
FLANGE	CONCRETE (3.05 KSI MIN.)	3/16" DEWALT ULTRACON+	1-3/4"	1"
FLANGE	HOLLOW OR GROUT-FILLED CMU (ASTM C-90)	3/16" DEWALT ULTRACON+	1-1/4"	2-1/2"
FLANGE	2X MIN. SOUTHERN PINE (G=0.55)	3/16" ITW TAPCON OR DEWALT ULTRACON+	1-3/8"	7/8"
FLANGE	2X MIN. SOUTHERN PINE (G=0.55)	#10 WOOD SCREW	1-3/8"	7/8"
FLANGE	16 GAUGE (0.060") MIN. STEEL STUD (33 KSI YIELD MIN)	#10-16 HILTI KWIK-FLEX OR ITW TEKS SELF-DRILLING SCREW	FULL THREAD THRU 0.060"	7/16"
FLANGE	1/8" ALUM. (6063-T5 MIN.) OR 1/8" STEEL (33 KSI MIN.)	#10 GRADE 5 SELF-TAPPING / DRILLING SCREW	FULL THREAD THRU 0.125"	7/16"
FIN	2X MIN. SOUTHERN PINE (G=0.55)	#8 WOOD SCREW	1-1/2"	7/16"

FLANGE REMOVAL NOTE: PARTIALLY OR FULLY REMOVING THE FLANGE, UP TO AND INCLUDING A BOX-FRAME APPLICATION IS ACCEPTABLE PROVIDED:

- MIN. 1/4" FILLET OF CONSTRUCTION-GRADE ADHESIVE CAULK IS APPLIED INSIDE AND OUT, FULL PERIMETER, BY INSTALLER.
- PRODUCT ANCHORAGE IS IN ACCORDANCE WITH REQUIREMENTS AS SHOWN FOR FLANGE WINDOWS.

CWS
1900 SW 44TH AVE.
OCALA, FLORIDA 34474
WWW.CWS.CC

VSH05

8100 PVC SINGLE HUNG IMPACT

PROPRIETARY AND CONFIDENTIAL
THE INFORMATION CONTAINED IN THIS DRAWING IS THE SOLE PROPERTY OF CUSTOM WINDOW SYSTEMS, INC. ANY REPRODUCTION IN PART OR AS A WHOLE WITHOUT THE WRITTEN PERMISSION OF CUSTOM WINDOW SYSTEMS, INC IS PROHIBITED.

FLORIDA APPROVAL NO.:
17647

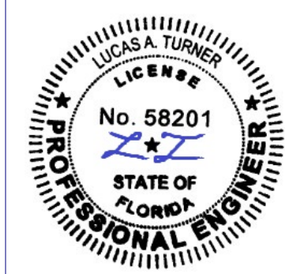

9/21/2026

LUCAS A. TURNER, P.E.
FL PE # 58201
Turner Engineering & Consulting, Inc.
2428 Old Natchez Trc Trl
Camden, TN 38320
PH. 941-380-1574

SHEET DESCRIPTION:
INSTALLATION DETAILS

DRAWN BY:	DATE:
MCS	8/25/2026
DWG #: CWS-958	REV.: G
SCALE: 1:2	SHEET 6 OF 6