SLIDING GLASS DOOR - LARGE MISSILE IMPACT

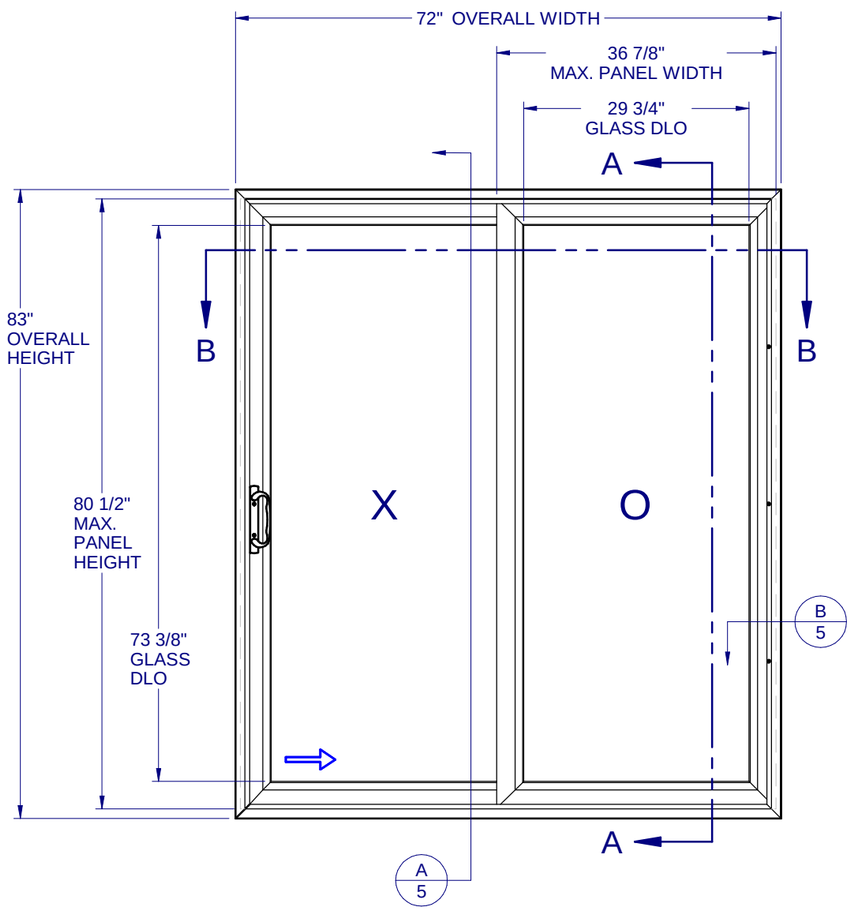

GENERAL NOTES:

1. THE PRODUCT SHOWN HEREIN IS DESIGNED AND MANUFACTURED TO COMPLY WITH THE FLORIDA BUILDING CODE (FBC), CURRENT EDITION AND IS RATED FOR WIND ZONE 3 MISSILE LEVEL D IMPACT USE AS DEFINED IN ASTM E 1996 PER THE FBC.

   THIS PRODUCT MAY NOT BE USED IN THE HIGH VELOCITY HURRICANE ZONE (HVHZ) OR IN ASTM E 1996 WIND ZONE 4 AREAS.

2. GLAZING OPTIONS: (SEE SHEET 2)

3. APPROVED CONFIGURATIONS: "XO", "OX".

4. DESIGN PRESSURES:
   -NEGATIVE DESIGN LOADS BASED ON TESTED PRESSURE AND GLASS TABLES ASTM E-1300.
   -POSITIVE DESIGN LOADS BASED ON TESTED PRESSURE, WATER INFILTRATION TEST PRESSURE, AND GLASS TABLES ASTM E-1300.
   -DESIGN LOADS ARE BASED ON ALLOWABLE STRESS DESIGN, ASD.

5. ANCHORAGE: THE 33 1/3% STRESS INCREASE HAS NOT BEEN USED IN THE DESIGN OF THIS PRODUCT. SEE SHEET 5 FOR INSTALLATION DETAIL. WIND LOAD DURATION FACTOR Cd=1.6 WAS USED FOR WOOD ANCHOR CALCULATIONS.

6. PRODUCTS APPROVED FOR IMPACT RESISTANCE. SHUTTERS ARE NOT REQUIRED.

7. ALL FRAMES AND VENTS ARE FULLY WELDED.

8. THE DESIGNATION X STANDS FOR THE FOLLOWING:
   X = OPERABLE SASH, O = FIXED SASH.

9. SECTION CALLOUTS APPLY TO ALL ELEVATIONS IN A SIMILAR LOCATION.

10. WEEP SLOTS = 1/4" x 1" LOCATED 8" FROM BOTH ENDS.

11. INSTALLATION WITH NO SILL RISER IS ALLOWED ONLY WHERE WATER INFILTRATION RESISTANCE IS NOT REQUIRED.

Lucas Turner
2026.09.21
15:51:24
-05'00'

TABLE OF CONTENTS

GENERAL NOTES & ELEVATIONS.....1
SECTION VIEWS & GLAZING DETAIL...2
BOM AND EXTRUSIONS.....3
ANCHOR SCHEDULE & NOTES.....4
INSTALLATION DETAILS.....5

MAX. UNIT SIZE	DESIGN PRESSURE RATING	IMPACT RATING
72" x 83"	+/- 55 PSF	LARGE MISSILE IMPACT

CWS
1900 SW 44TH AVE.
OCALA, FLORIDA 34474
WWW.CWS.CC

VSD04

8900 PVC SLIDING GLASS DOOR - IMPACT

PROPRIETARY AND CONFIDENTIAL
THE INFORMATION CONTAINED IN THIS DRAWING IS THE SOLE PROPERTY OF CUSTOM WINDOW SYSTEMS, INC. ANY REPRODUCTION IN PART OR AS A WHOLE WITHOUT THE WRITTEN PERMISSION OF CUSTOM WINDOW SYSTEMS, INC IS PROHIBITED.

FLORIDA APPROVAL NO.:
17338

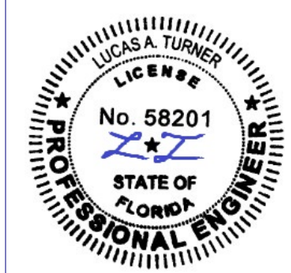

9/21/2026

LUCAS A. TURNER, P.E.
FL PE # 58201
Turner Engineering & Consulting, Inc.
2428 Old Natchez Trc Trl
Camden, TN 38320
PH. 941-380-1574

SHEET DESCRIPTION:
GENERAL NOTES AND ELEVATIONS

DRAWN BY:	DATE:
MCS	9/2/2026
DWG #: CWS-928	REV.: E
SCALE: 1:20	SHEET 1 OF 5

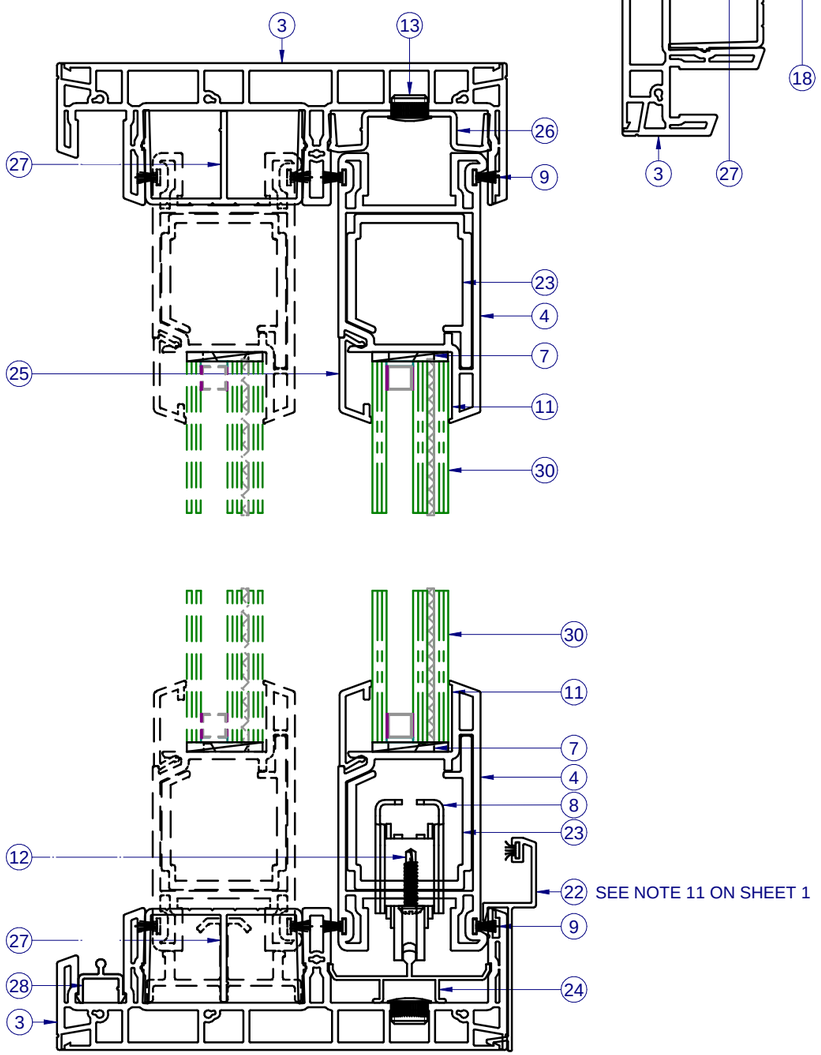

SECTION VIEW A-A

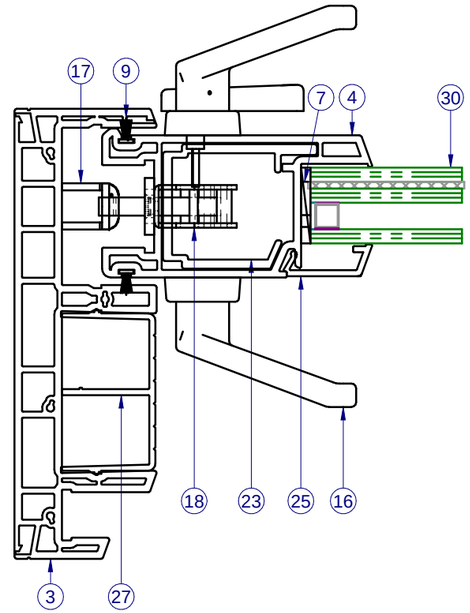

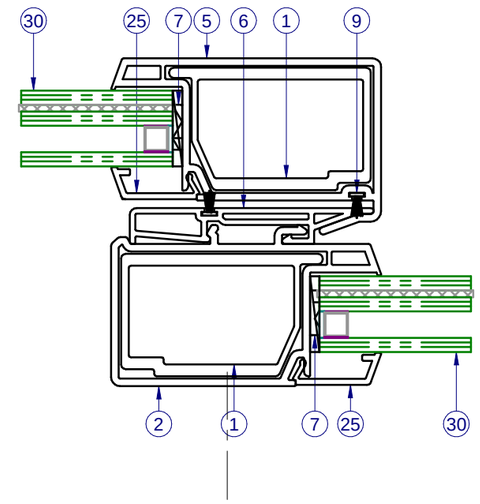

SECTION VIEW B-B

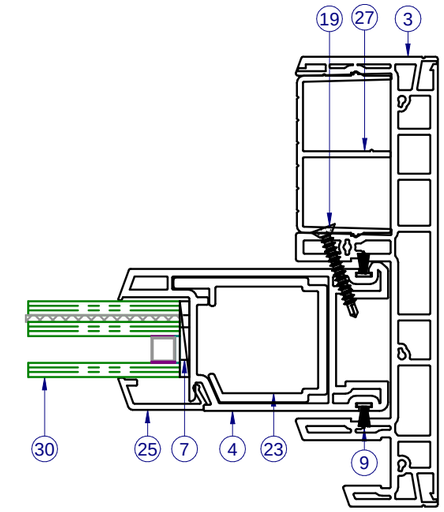

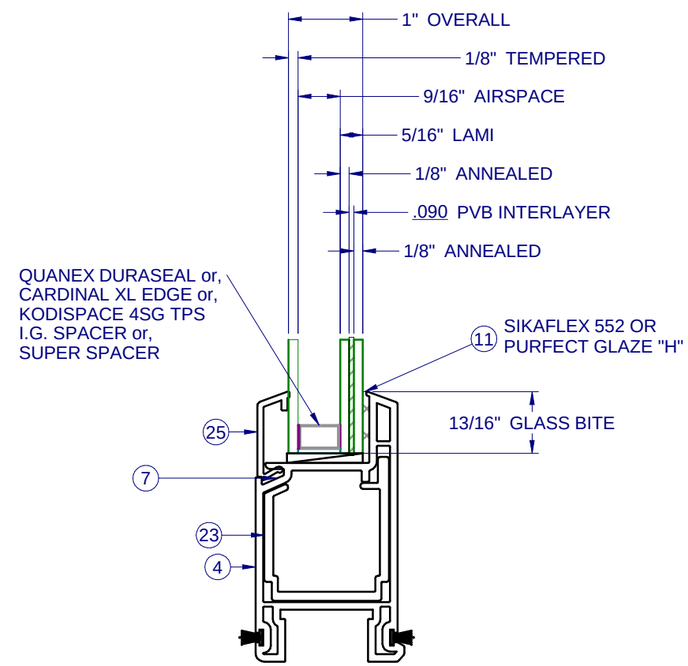

NOTES:
GLASS AS INDICATED IN THIS APPROVAL IS SGCC CERTIFIED TO ANSI Z97.1 AND CPSC 16 CFR 1201, TO BE FIELD VERIFIED BY PERMANENT ETCHING MARK ON EACH GLASS LITE.

CWS
1900 SW 44TH AVE.
OCALA, FLORIDA 34474
WWW.CWS.CC

VSD04

8900 PVC SLIDING GLASS DOOR - IMPACT

PROPRIETARY AND CONFIDENTIAL
THE INFORMATION CONTAINED IN THIS DRAWING IS THE SOLE PROPERTY OF CUSTOM WINDOW SYSTEMS, INC. ANY REPRODUCTION IN PART OR AS A WHOLE WITHOUT THE WRITTEN PERMISSION OF CUSTOM WINDOW SYSTEMS, INC IS PROHIBITED.

FLORIDA APPROVAL NO.:
17338

9/21/2026

LUCAS A. TURNER, P.E.
FL PE # 58201
Turner Engineering & Consulting, Inc.
2428 Old Natchez Trc Trl
Camden, TN 38320
PH. 941-380-1574

SHEET DESCRIPTION:
SECTION VIEWS AND GLAZING DETAIL

DRAWN BY:	DATE:
MCS	9/2/2026
DWG #: CWS-928	REV.: E
SCALE: 1:2	SHEET 2 OF 5

PARTS LIST			
ITEM	PART #	DESCRIPTION	MATERIAL
1	H-1993	REINFORCEMENT, PVC SGD, INTERLOCK	ALUM
2	H-6033	PANEL, INTERLOCK, FIXED	PVC
3	H-6042	FRAME, MAIN, SGD	PVC
4	H-6059	PANEL TOP/BOTTOM/SIDE RAIL, SGD	PVC
5	H-6060	PANEL, INTERLOCK, OPERABLE	PVC
6	H-6061	INTERLOCK, SNAP-ON	PVC
7	P-5531	Setting Block, .09 x 1 x 2	RUBBER
8	P-3142	ROLLER, SGD, ADJUSTABLE, STAINLESS WHEEL	STEEL
9	P-3302	WSTP., 0.330 X .187, BACK FINSEAL, GRAY	
10	P-3342	SEAM SEALER, SM-5504	
11		SIKAFLEX 552 OR PURFECT GLAZE "H"	
12	P-3539	#8 X 3/4" QUAD PHILIPS, TEK	ZINC
13	P-5588	CAP PLUG, 1/2" HOLE	NYLON
14		#10 x 1-1/2" PH PAN SMS	ZINC
15	P-3511	#8 x 5/8" SQUARE, PH TEK TYPE AB	ZINC
16	P-5536	LOCK & HANDLE KIT, PVC, SGD	STEEL
17	P-3792	3/4" KEEPER	SS
18	P-3793	MORTISE LOCK	SS
19	P-3547	#8 x 1-1/2" Philips Pan TEK	ZINC
20	P-4250	#10 x 2-1/2" PH PAN SMS	ZINC
21	S-1722	Fixed Panel Support	ALUM
22	S-1737	HIGHRISE SILL, ALUMINUM	ALUM
23	S-1775	REINFORCEMENT, PVC SGD, PANEL	ALUM
24	S-1930	Sill Roller Track, Aluminum	ALUM
25	S-6037	GLAZING BEAD 1.00", SGD	PVC
26	S-4299	ANTI-LIFT BLOCK, PVC SGD	PVC
27	S-6040	THRESHOLD/FILLER, SGD	PVC
28	S-6041	TRACK, SCREEN, SGD	PVC
30		GLASS (SEE SHEET 2)	

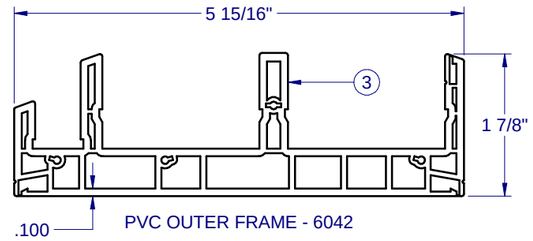

PVC OUTER FRAME - 6042

CORNER CONSTRUCTION

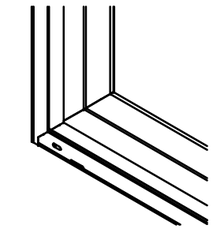

ALL CORNERS WELDED
1:10

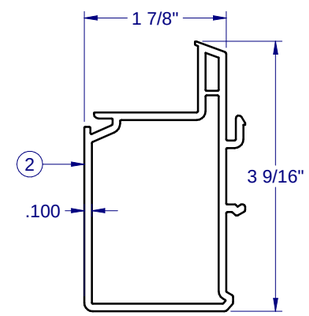

PVC PANEL INTERLOCK - 6033

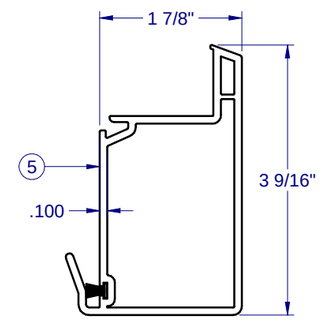

PVC PANEL INTERLOCK - 6060

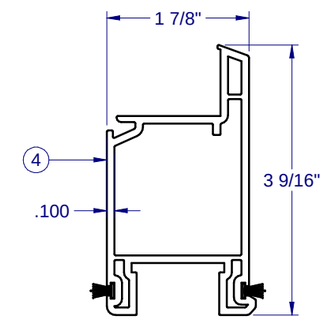

PVC PANEL LOCKSTILE - 6059

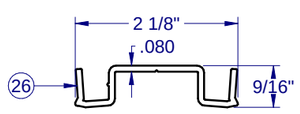

ANTI-LIFT BLOCK - 4299

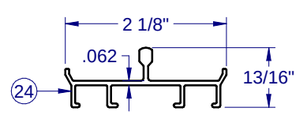

ROLLER TRACK - 1930

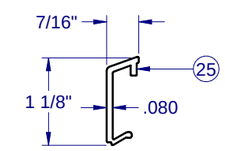

PVC GLAZING BEAD - 6037

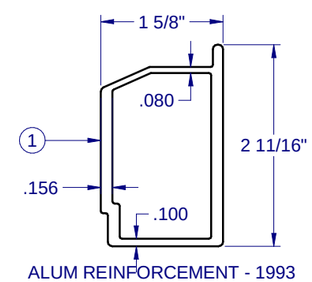

ALUM REINFORCEMENT - 1993

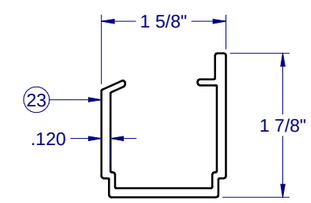

ALUM REINFORCEMENT - 1775

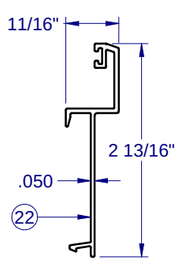

ALUM. HIGHRISE - 1737
SEE NOTE 12 ON SHEET 1

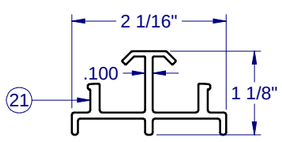

FIXED PANEL SUPPORT - 1722

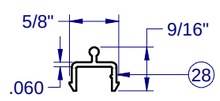

PVC SCREEN TRACK - 6041

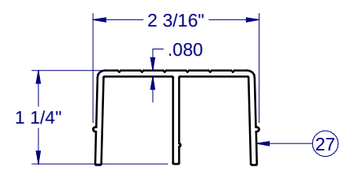

PVC TRACK FILLER - 6040

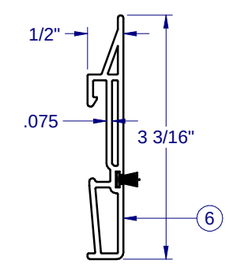

PVC INTERLOCK SNAP - 6061

NOTE: ALL ALUMINUM EXTRUSIONS ARE 6063-T6.

CWS
1900 SW 44TH AVE.
OCALA, FLORIDA 34474
WWW.CWS.CC

VSD04

8900 PVC SLIDING GLASS DOOR - IMPACT

PROPRIETARY AND CONFIDENTIAL
THE INFORMATION CONTAINED IN THIS DRAWING IS THE SOLE PROPERTY OF CUSTOM WINDOW SYSTEMS, INC. ANY REPRODUCTION IN PART OR AS A WHOLE WITHOUT THE WRITTEN PERMISSION OF CUSTOM WINDOW SYSTEMS, INC IS PROHIBITED.

FLORIDA APPROVAL NO.:
17338

9/21/2026

LUCAS A. TURNER, P.E.
FL PE # 58201
Turner Engineering & Consulting, Inc.
2428 Old Natchez Trc Trl
Camden, TN 38320
PH. 941-380-1574

SHEET DESCRIPTION:
BOM AND EXTRUSIONS

DRAWN BY:	DATE:
MCS	9/2/2026
DWG #: CWS-928	REV.: E
SCALE: 1:2	SHEET 3 OF 5

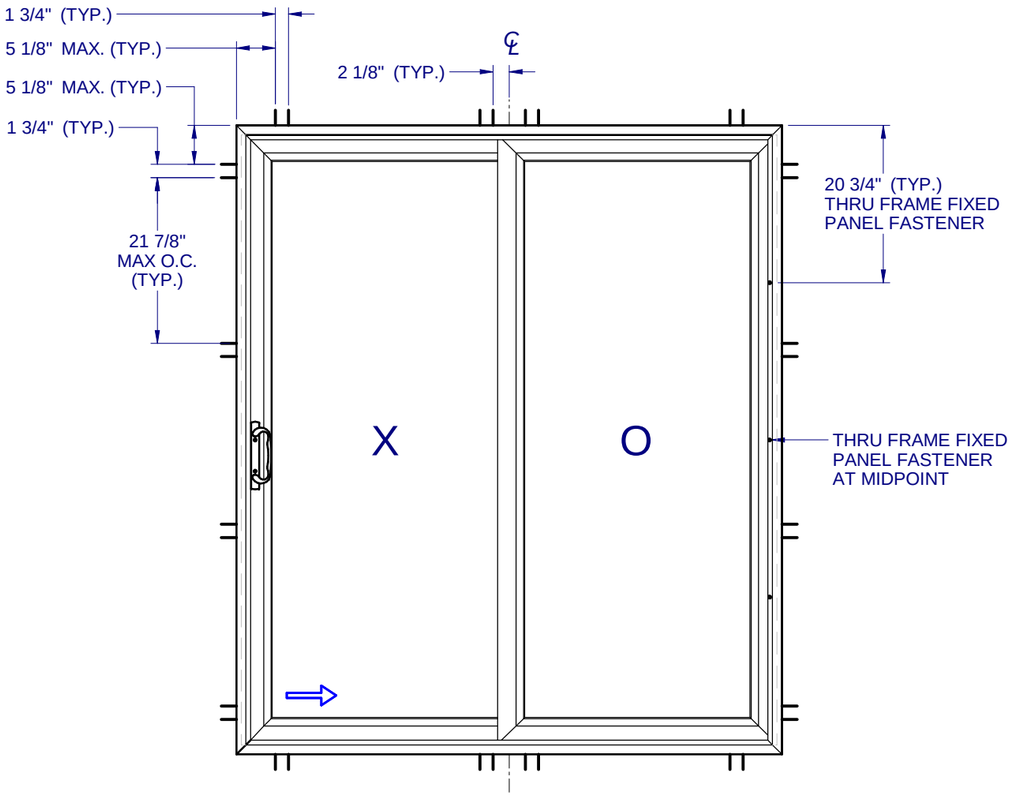

ANCHOR LAYOUT
1:20

ANCHOR STAGGER PATTERNS

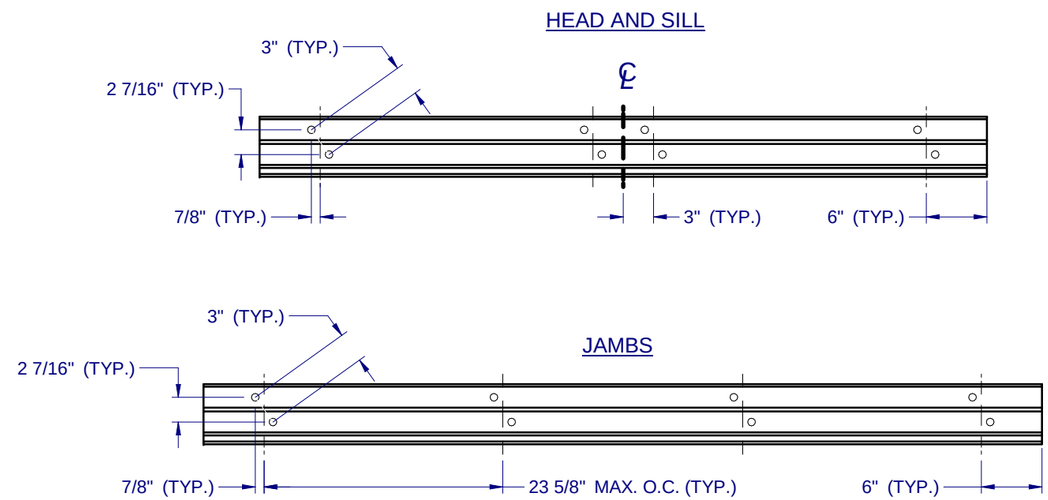

NOTES:

1. INSTALL ONE ANCHOR AT EACH LOCATION (STAGGERED PATTERN) AS INDICATED ON THIS SHEET. SILL ANCHOR SPACING SAME AS HEAD.

2. SHIM AS REQ'D AT EACH INSTALLATION ANCHOR USING LOAD BEARING SHIMS. MAX. ALLOWABLE SHIM STACK TO BE 1/4". USE SHIMS WHERE SPACE GREATER THAN 1/16" IS PRESENT. LOAD BEARING SHIMS SHALL BECONSTRUCTED OF HIGH DENSITY PLASTIC OR BETTER. WOOD SHIMS ARE NOT ALLOWED.

3. ANCHOR TYPE, SIZE, SPACING AND EMBEDMENT SHALL BE AS SPECIFIED IN THESE DRAWINGS, SEE TABLE 1, SHEET 5.

4. ALL INSTALLATION ANCHORS MUST BE MADE OF OR PROTECTED WITH A CORROSION RESISTANT MATERIAL OR COATING. DISSIMILAR METALS OR MATERIALS IN CONTACT WITH PRESSURE TREATED WOOD MUST BE PROTECTED TO PREVENT REACTION.

5. INSTALLATION ANCHORS SHALL BE IN ACCORDANCE WITH ANCHOR MANUFACTURER'S INSTALLATION INSTRUCTIONS, AND ANCHORS SHALL NOT BE USED IN SUBSTRATES WITH STRENGTHS LESS THAN THE MINIMUM SPECIFIED IN TABLE 1, SHEET 5.

6. ANCHOR EMBEDMENT TO SUBSTRATE SHALL BE BEYOND WALL DRESSING OR STUCCO. FOR CONCRETE/CMU OPENINGS, EMBEDMENT SHALL BE BEYOND WOOD BUCKS, IF USED, INTO SUBSTRATE. INSTALLATIONS TO SOLID CONCRETE OR GROUT-FILLED CMU MAY INCLUDE BUT DO NOT REQUIRE 1X WOOD BUCKS BETWEEN THE PRODUCT AND THE SUBSTRATE. INSTALLATIONS TO HOLLOW CMU REQUIRE THE USE OF 1X BUCKS BETWEEN THE PRODUCT AND SUBSTRATE.

7. A MINIMUM CENTER-TO-CENTER SPACING SHALL BE MAINTAINED BETWEEN ALL FASTENERS: 3" FOR MASONRY, 1" FOR WOOD AND METAL.

8. WOOD OR MASONRY OPENINGS, BUCKS AND BUCK FASTENERS SHALL BE PROPERLY DESIGNED BY THE ARCHITECT OR ENGINEER OF RECORD AND INSTALLED TO TRANSFER WIND LOADS TO THE STRUCTURE. SUBSTRATES SHALL MEET THE MINIMUM STRENGTH REQUIREMENTS AS SHOWN IN TABLE 1, SHEET 5. CONCRETE AND MASONRY SUBSTRATES MAY NOT BE CRACKED.

9. SEALING AND FLASHING STRATEGIES FOR OVERALL WATER RESISTANCE OF INSTALLATION SHALL BE DONE BY OTHERS FOLLOWING THE CURRENT VERSION OF THE REFERENCE DOCUMENTS: FMA/AAMA 100(FIN WINDOWS), FMA/AAMA 200(FLANGE WINDOWS), FMA/WDMA 250(BOX WINDOWS), FMA/AAMA/WDMA 300(EXTERIOR DOORS)

CWS
1900 SW 44TH AVE.
OCALA, FLORIDA 34474
WWW.CWS.CC

VSD04

8900 PVC SLIDING GLASS DOOR - IMPACT

PROPRIETARY AND CONFIDENTIAL
THE INFORMATION CONTAINED IN THIS DRAWING IS THE SOLE PROPERTY OF CUSTOM WINDOW SYSTEMS, INC. ANY REPRODUCTION IN PART OR AS A WHOLE WITHOUT THE WRITTEN PERMISSION OF CUSTOM WINDOW SYSTEMS, INC IS PROHIBITED.

FLORIDA APPROVAL NO.:
17338

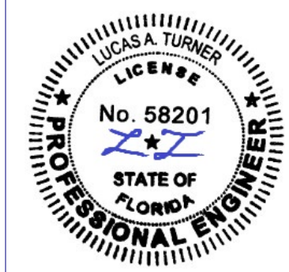

9/21/2026

LUCAS A. TURNER, P.E.
FL PE # 58201
Turner Engineering & Consulting, Inc.
2428 Old Natchez Trc Trl
Camden, TN 38320
PH. 941-380-1574

SHEET DESCRIPTION:
ANCHOR SCHEDULE AND NOTES

DRAWN BY:	DATE:
MCS	9/2/2026
DWG #: CWS-928	REV.: E
SCALE: 1:20	SHEET 4 OF 5

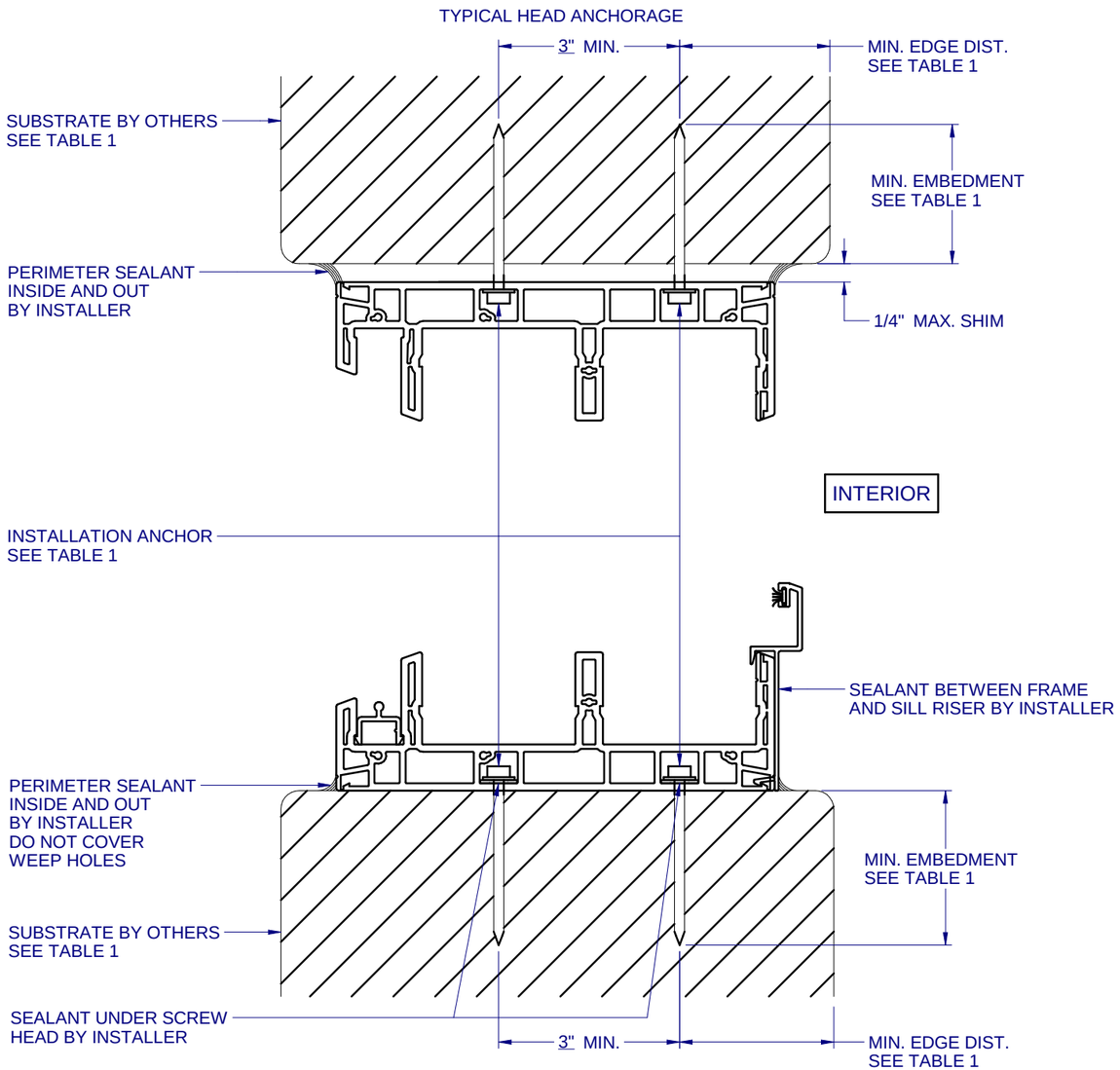

A 5 VERTICAL SECTION
TYPICAL SILL ANCHORAGE

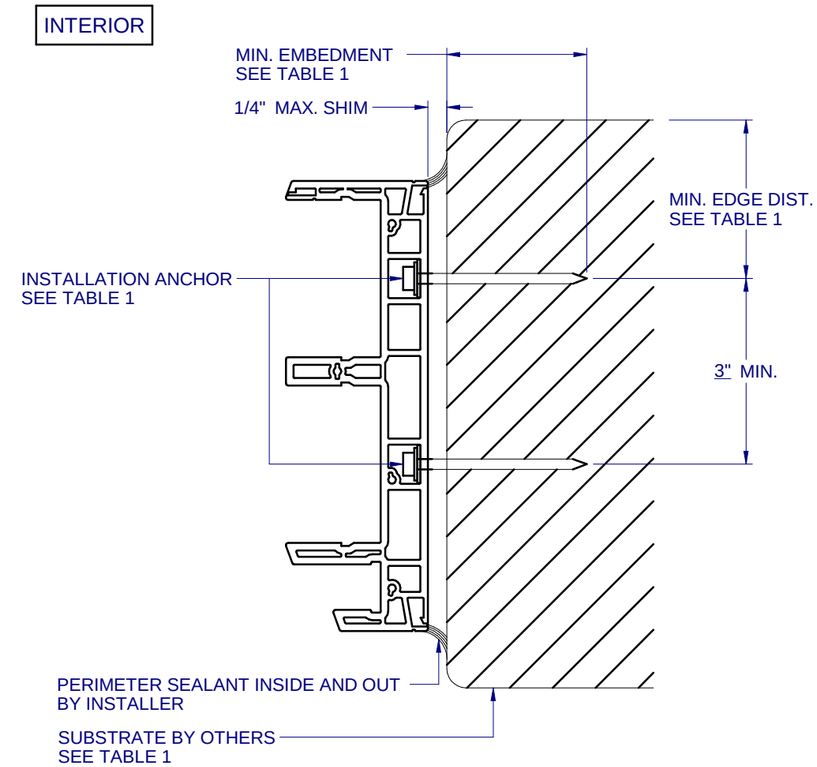

B 5 HORIZONTAL SECTION
TYPICAL JAMB ANCHORAGE

TABLE 1: APPROVED INSTALLATION FASTENERS

SUBSTRATE TYPE	ANCHOR TYPE	MIN. EMBEDMENT	MIN. EDGE DIST.
CONCRETE (2.0 KSI MIN.)	3/16" ITW TAPCON	1-1/2"	1-1/8"
HOLLOW OR GROUT-FILLED CMU (117 PCF MIN.)	3/16" ITW TAPCON	1"	2"
CONCRETE (3.05 KSI MIN.)	3/16" DEWALT ULTRACON+	1-3/4"	1"
HOLLOW OR GROUT-FILLED CMU (ASTM C-90)	3/16" DEWALT ULTRACON+	1-1/4"	2-1/2"
2X MIN. SOUTHERN PINE (G=0.55)	3/16" ITW TAPCON OR DEWALT ULTRACON+	1-3/8"	7/8"
2X MIN. SOUTHERN PINE (G=0.55)	#10 WOOD SCREW	1-3/8"	7/8"
16 GAUGE (0.060") MIN. STEEL STUD (33 KSI YIELD MIN)	#10-16 HILTI KWIK-FLEX OR ITW TEKS SELF-DRILLING SCREW	FULL THREAD THRU 0.060"	7/16"
1/8" ALUM. (6063-T5 MIN.) OR 1/8" STEEL (33 KSI MIN.)	#10 GRADE 5 SELF-TAPPING / DRILLING SCREW	FULL THREAD THRU 0.125"	7/16"

FOR INSTALLATIONS WITHIN 3,000 FEET OF A SALTWATER COASTLINE, ANCHORAGE MUST BE REVIEWED FOR COMPLIANCE WITH FBC SECTION 1711 OR SECTION R332 OF THE FLORIDA RESIDENTIAL CODE. REFER TO THE CORRESPONDING EVALUATION REPORT OF THIS APPROVAL FOR ADDITIONAL INFORMATION.

CWS
1900 SW 44TH AVE.
OCALA, FLORIDA 34474
WWW.CWS.CC

VSD04

8900 PVC SLIDING GLASS DOOR - IMPACT

PROPRIETARY AND CONFIDENTIAL
THE INFORMATION CONTAINED IN THIS DRAWING IS THE SOLE PROPERTY OF CUSTOM WINDOW SYSTEMS, INC. ANY REPRODUCTION IN PART OR AS A WHOLE WITHOUT THE WRITTEN PERMISSION OF CUSTOM WINDOW SYSTEMS, INC IS PROHIBITED.

FLORIDA APPROVAL NO.:
17338

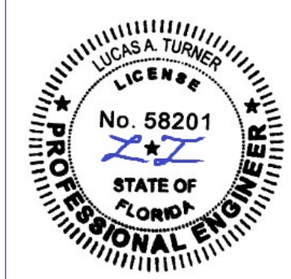

9/21/2026

LUCAS A. TURNER, P.E.
FL PE # 58201
Turner Engineering & Consulting, Inc.
2428 Old Natchez Trc Trl
Camden, TN 38320
PH. 941-380-1574

SHEET DESCRIPTION:
INSTALLATION DETAILS

DRAWN BY:	DATE:
MCS	9/2/2026
DWG #: CWS-928	REV.: E
SCALE: 1:2	SHEET 5 OF 5