REVISIONS				
ZONE	REV	DESCRIPTION	DATE	APPROVED

SOLATUBE INTERNATIONAL
M74 DS COLLECTOR RAYBENDER HD WITH CURB FLASHING

INSTALLATION ANCHORAGE SCHEDULE

OUTSIDE CURB DIMENSIONS	CURB			FASTENER (CURB CAP TO CURB)		
	MATERIAL	MIN. THICKNESS (1)	PROPERTIES (1)	DESCRIPTION	QUANTITY	SPACING
34–3/8" x 34–3/8"	2X8 SPRUCE–PINE–FUR	2" NOMINAL WOOD FRAMING	SPECIFY GRAVITY, G = 0.42	#10 X 2" PHILLIPS TRUSS HEAD SELD–DRILLING SHEET METAL SCREWS #10 X 2" WOOD SCREW	24	SPACED 2–1/2", 10" AND 16–1/2" ON CENTER FROM EACH CORNER FOR A TOTAL OF SIX FASTENERS PER SIDE.
	33 KSI STEEL (ASTM A653)	18 GAUGE (0.0451")	Fy = 33 KSI Fu = 45 KSI	#10–16 SAE GRADE 5 TEKS SCREW WITH MINIMUM 3 THREADS PAST THE CURB SUBSTRATE	24	SPACED 2–1/2", 10" AND 16–1/2" ON CENTER FROM EACH CORNER FOR A TOTAL OF SIX FASTENERS PER SIDE.
	3105–H14 ALUMINUM	0.0508"	Fty = 22 KSI Ftu = 25 KSI	#10–24 300 SERIES STAINLESS STEEL METAL SCREW WITH MINIMUM 3 THREADS PAST THE CURB SUBSTRATE	24	SPACED 2–1/2", 10" AND 16–1/2" ON CENTER FROM EACH CORNER FOR A TOTAL OF SIX FASTENERS PER SIDE.
	NORMAL WEIGHT CONCRETE	4"	f'c = 2,500 PSI	3/16" ITW TAPCON CONCRETE SCREW WITH MIN. EMBEDMENT OF 1–1/2"	24	SPACED 2–1/2", 10" AND 16–1/2" ON CENTER FROM EACH CORNER FOR A TOTAL OF SIX FASTENERS PER SIDE.

(1) INSTALLATION ON A CURB SUBSTRATE WITH A LOWER THICKNESS OR LOWER MECHANICAL PROPERTIES MAY RESULT IN A LOWER WIND LOAD RATING. ADDITIONAL ENGINEERING ANALYSIS REQUIRED BY A LICENSED DESIGN PROFESSIONAL FOR CURB SUBSTRATES WEAKER/LESSOR THAN THE MINIMUM REQUIREMENTS SHOWN.

PERFORMANCE RATING

OPENING PROTECTION APPLICABILITY	DESIGN PRESSURE (PSF)	IMPACT RATING
ALL AREAS WHERE OPENING PROTECTION IS NOT REQUIRED	+/–69.7	NA
THIS PRODUCT IS APPROVED FOR USE IN THE HIGH VELOCITY HURRICANE ZONE (HVHZ).		
THIS PRODUCT HAS BEEN TESTED FOR STRUCTURAL LOADING ONLY.		

SIGNED AND SEALED BY
Robert J. Amoruso, P.E.
Florida P.E. No. 49752

ROBERT JAMES AMORUSO LICENSE No 49752 STATE OF FLORIDA PROFESSIONAL ENGINEER

Digitally signed by Robert J. Amoruso
DN: cn=Robert J. Amoruso, o, ou=PTC Product Design Group, email=robert@ptc-corp.com, c=US
Date: 2015.10.19 09:56:20 -04'00'

PTC
PTC Product Design Group, LLC
PO Box 520775
Longwood, FL 32752-0775
FBPE C.A. NO. 25935
Phone: 321.690.1788
Fax: 321.690.1789
Email: info@ptc-corp.com

SOLATUBE Innovation in Daylighting.
Solatube International, Inc.
2210 Oak Ridge Way
Vista, CA 92081-8341

FILE NAME	
CONTRACT NO	415–0316
DRAWN	
CHECK	
APPR.	
ISSUED	

M74 DS COLLECTOR
RAYBENDER HD WITH CURB FLASHING

SIZE	FSCM NO	DWG NO	REV
	–	M74 DS–O–C–FC–REG	ORIG.
SCALE NONE		WEIGHT	SHEET 1 OF 2

M74 DS–O–C–FC–REC – ANCHOR SCHEDULE

ROBERT J. AMORUSO, P.E.

REVISIONS				
ZONE	REV	DESCRIPTION	DATE	APPROVED

SOLATUBE INTERNATIONAL
M74 DS COLLECTOR RAYBENDER HD WITH CURB FLASHING

Connection	Fastener (Collector to Curb Cap and Curb Cap to Curb)		
	Description	Qty.	Locations
M74 DS Wire Rope to M74 DS Dome Retainer Band Assembly	#10-24 x 1.25" hex washer head, stainless steel screw with a #10-24 aluminum rivet nut	4	Unions are attached at four locations equidistant along the circumference of the Dome Retainer Band.
	M74 DS Union	4	
M74 DS Dome Ring to M74 DS Dome Cylinder Back to M74 DS Cone Base	M74 DS Dome Ring	1	Eight rivets are placed along the upper edge of the Dome Cylinder Back to connect to the Dome Ring. Eight rivets are placed along the lower edge of the Dome Cylinder Back to connect to the Cone Base.
	M74 DS Dome Cylinder Back	1	
	M74 DS Cone Base	1	
	1/8" diameter x 1/4" Rivet	16	
M74 DS Dome Ring to M74 DS Stanchion to M74 DS Cross Beam to M74 DS Cone Base	M74 DS Dome Ring	1	Two rivets are placed at each end of each Stanchion to connect it to the Cone Base on the bottom and the Dome Ring and Cross Beam at the top. Two rivets are placed at each end of each Cross Beam to connect it to the Dome Ring and Cylinder Back on one end the Dome Ring at the other end.
	M74 DS Stanchion	2	
	M74 DS Cross Beam	2	
	M74 DS Cone Base	1	
	1/8" diameter x 1/4" Rivet	16	
M74 DS Cleat to M74 DS Cylinder Back	M74 DS Cleat	2	Nine rivets are placed along the edge of each Cleat to connect it to the Cylinder Back.
	M74 DS Cylinder Back	1	
	1/8" diameter x 1/4" Rivet	18	
M74 DS Reflector to M74 DS Cylinder Back	M74 DS Reflector	1	Two Rivets are placed along each vertical side of the reflector to connect it to the Cylinder Back.
	M74 DS Cylinder Back	1	
	1/8" diameter x 1/4" Rivet	4	
M74 DS Cylinder Assembly to M74 DS Curb Cap Flashing Assembly	M74 DS Cone Clamp	4	Clamps are located at four locations at the mid-point of each side of the M74 DS Curb Cap Flashing assembly with four Rivets per clamp.
	M74 DS Cone Base	1	
	M74 DS Curb Cap Flashing	1	
	1/8" diameter x 1/4" Rivet	16	

SIGNED AND SEALED BY
Robert J. Amoruso, P.E.
Florida P.E. No. 49752

ROBERT JAMES AMORUSO LICENSE No 49752 STATE OF FLORIDA PROFESSIONAL ENGINEER

Digitally signed by Robert J. Amoruso
DN: cn=Robert J. Amoruso, o, ou=PTC Product Design Group, email=robert@ptc-corp.com, c=US
Date: 2015.10.19 09:56:35 -04'00'

PTC Product Design Group, LLC
PO Box 520775
Longwood, FL 32752-0775
FBPE C.A. NO. 25935
Phone: 321.690.1788
Fax: 321.690.1789
Email: info@ptc-corp.com

SOLATUBE Innovation in Daylighting.

Solatube International, Inc.
2210 Oak Ridge Way
Vista, CA 92081-8341

FILE NAME	
CONTRACT NO	415-0316
DRAWN	
CHECK	
APPR.	
ISSUED	

M74 DS COLLECTOR
RAYBENDER HD WITH CURB FLASHING

SIZE	FSCM NO	DWG NO	REV
	–	M74 DS-O-C-FC-REG	ORIG.
SCALE NONE	WEIGHT	SHEET 2 OF 2	

M74 DS-O-C-FC-REC – ANCHOR SCHEDULE

ROBERT J. AMORUSO, P.E.

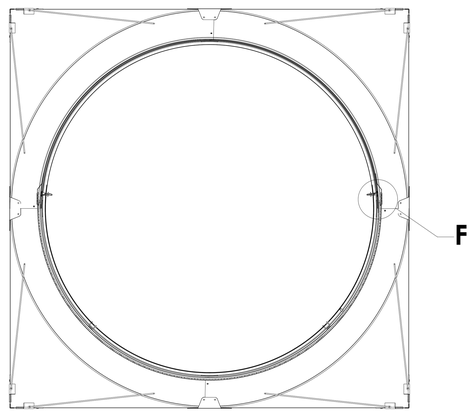

SECTION B-B

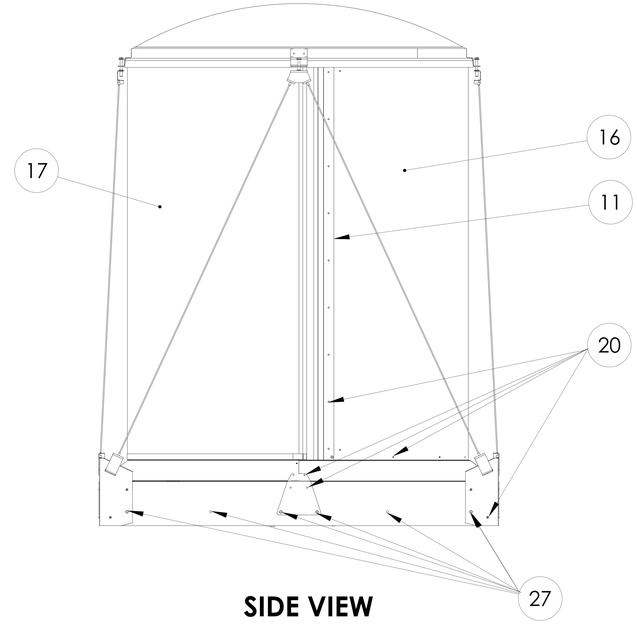

SIDE VIEW

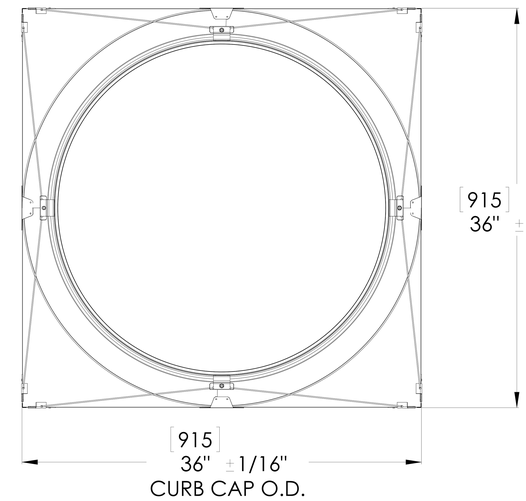

TOP VIEW

ROBERT JAMES AMORUSO
LICENSE
No 49752
STATE OF
FLORIDA
PROFESSIONAL ENGINEER

Digitally signed by Robert J. Amoruso
DN: cn=Robert J. Amoruso, o, ou=PTC Product Design Group, email=robert@ptc-corp.com, c=US
Date: 2015.10.19 09:56:48 -04'00'

ITEM NO.	PART NUMBER	DESCRIPTION	QTY.
1	508015	OUTER DOME M74 DS	1
2	400955	RAYBENDER HD LENS M74 DS	1
3	480045	DOME RETAINER BAND ASSY M74 DS	1
4	400470	DOME RING M74 DS	1
5	700395	SCREW 10-24 X 1-1/4" HEX WASHER	4
6	700385	WASHER EXTERNAL TOOTH	4
7	700415	RIVET NUT 10-24 OPEN	4
8	480100	UNION M74 DS	4
9	500585	CYLINDER DOME STANCHION M74 DS	2
10	600035	D FOAM SEAL	16 FT
11	700285	CYLINDER DOME CLEAT M74 DS	2
12	700365	STANDOFF 3/8" SNAP LOCK	4
13	700405	WASHER NYLON 5M	4
14	700406	WASHER NYLON 4M RETAINER	8
15	300200	CYLINDER REFLECTOR M74 DS	1
16	508010	DOME CYLINDER BACK PANEL M74 DS	1
17	504015	DOME CYLINDER PLASTIC M74 DS	1
18	700325	CONE CLAMP M74 DS	4
19	410430	BASE CONE ASSY M74 DS	1
20	700635	RIVET 1/8	64
21	400415	WIRE ROPE	8
22	480075	BALL SWAGE	16
23	480095	CORNER CLIP M74 DS	8
24	504005	DOME CYLINDER BELT M74 DS	2
25	600025	PILE WEATHERSEAL	8 FT
26	700005	O-RING RUBBER	4
27	700480	SCREW 10 X 2" MOD TRUSS HEAD	24

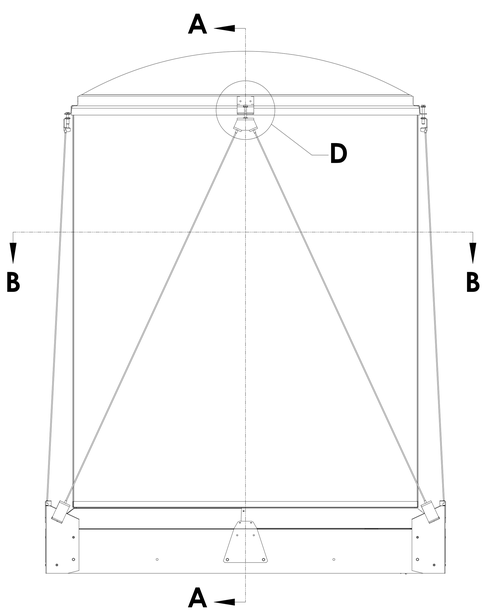

FRONT VIEW

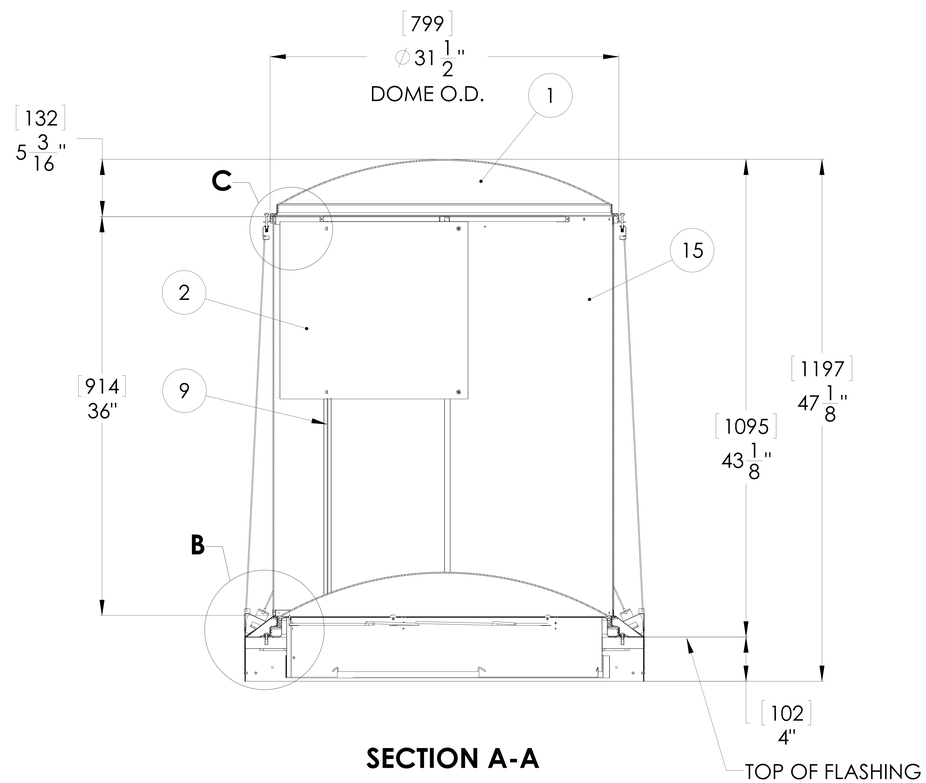

SECTION A-A

NOTES:

1. M74 DS COLLECTOR RAYBENDER HD SHOWN ASSEMBLED TO M74 DS CURB FLASHING ASSEMBLY (SEE DETAIL D ON SHT 2)

UNLESS OTHERWISE SPECIFIED:
DIMENSION TOLERANCE
FRACTIONS ± 1/4"
INCH .X ± .1 .XX ± .06
MILLIMETER [.X] ± 2.5 [.XX] ± 1.5

MATERIAL

FINISH

DO NOT SCALE DRAWING

SOLATUBE INTERNATIONAL, INC.
COPYRIGHT 2014
WWW.SOLATUBE.COM

DRAWN BY STEVENS DATE 17 FEB 14
CHECKED BY DATE
APPROVED BY DATE

SOLATUBE
2210 OAK RIDGE WAY
VISTA, CALIFORNIA 92081-8341
PH (760) 597-4400

TITLE:
M74 DS COLLECTOR
RAYBENDER HD W/CURB FLASH

SIZE D
DWG. NO. M74DS-O-C-FC-REG
REV 2
SCALE: 2:3
SHEET 1 OF 2

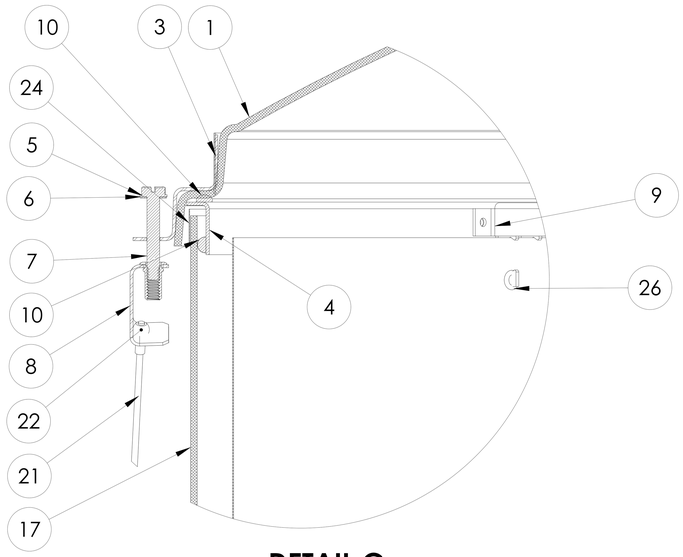

DETAIL C
SCALE 4 : 1

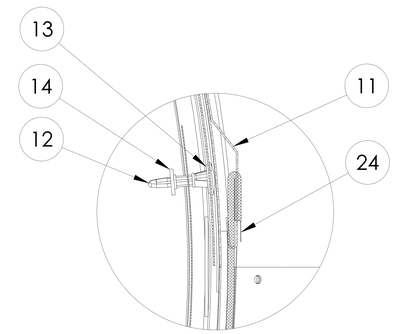

DETAIL F
SCALE 4 : 1

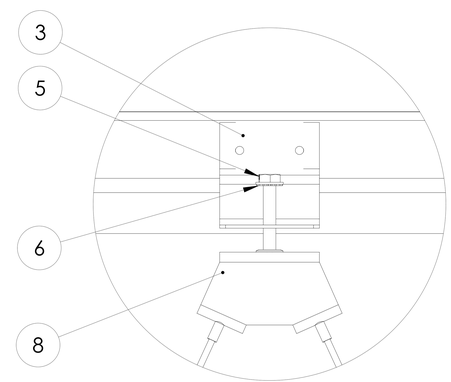

DETAIL D
SCALE 4 : 1

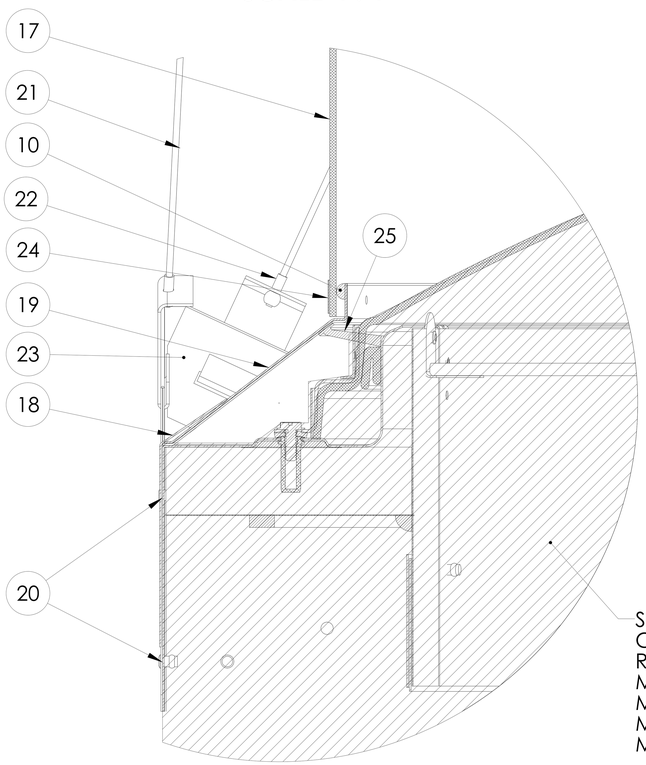

SHADED AREA IS BASE
CURB FLASHING ASSEMBLY
REFERENCE DRAWINGS:
M74 DS-O-DPP-FC-B-L2-REG
M74 DS-O-DP-FC-B-L2-REG
M74 DS-O-DPP-FC-A-L2-REG
M74 DS-O-DP-FC-A-L2-REG

DETAIL B
SCALE 4 : 1

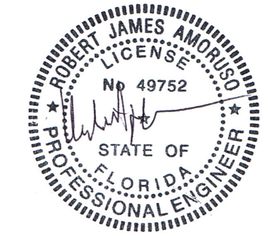

Digitally signed by Robert J. Amoruso
DN: cn=Robert J. Amoruso, o, ou=PTC Product Design Group, email=robert@ptc-corp.com, c=US
Date: 2015.10.19 09:57:04 -04'00'

TITLE:		
M74 DS COLLECTOR RAYBENDER HD W/CURB FLASH		
SIZE	DWG. NO.	REV
D	**M74DS-O-C-FC-REG**	**2**
	SCALE: 1:1	SHEET 2 OF 2