CLOPAY	IDEAL	HOLMES	
3717	C7X17	--	27GA 1.75" THICK MINOR RIB
3718	C7X18	--	27GA 1.75" THICK FLUSH
3720	C7X20	240U	27GA 2" THICK MINOR RIB
3722	COX22	--	20GA 2" THICK FLUSH
3724	C7X24	244U	24GA 2" THICK MINOR RIB
3730	--	--	27GA 3" THICK MINOR RIB

SHEET: 1 OF 4

REVISIONS

REV. NO.	ZONE:	DATE:	ECN NO.	APPVD:	DESCRIPTION
02	–	5/16/14	–	–	MAT. NOTES & GLASS BITE ADDED IMPACT WINDOW CROSS-SECTION
03	–	8/10/20	–	SH	UPDATED TITLE BLOCK AND REMOVED WIND CHART
04	–	3/6/25	–	JDW	ADDED MODEL 3730
05	–	10/6/25	–	DH	REVISED IMPACT RESISTANT GLAZING DETAILS

OPTIONAL GLAZING MAY BE STANDARD (DSB OR BETTER) OR IMPACT RESISTANT GLAZING. MAXIMUM GLAZING SIZE (DLO) IS 22"x9-7/8". SEE SECTION B-B ON SHEET 2 FOR DETAILS. GLAZING MAY BE INSTALLED IN TOP SECTION (NOT SHOWN) OR INTERMEDIATE SECTION (SHOWN).

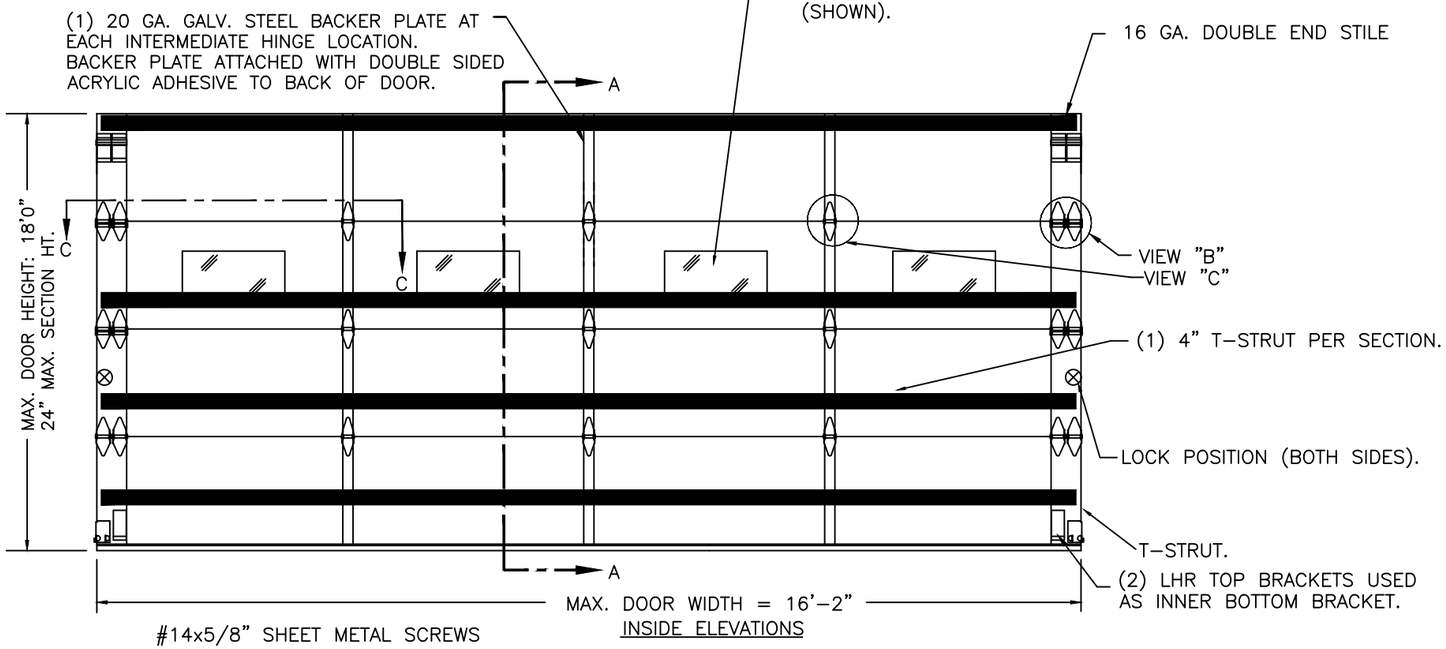

INSIDE ELEVATIONS

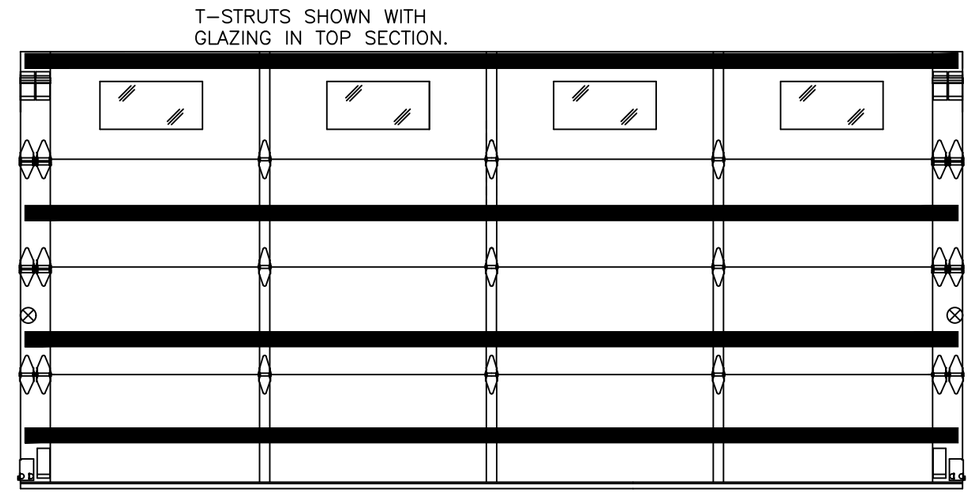

DOOR HEIGHT 'A'	NUMBER OF SECTIONS
UP TO 8'-0"	4
8'-3" THRU 10'-0"	5
10'-3" THRU 12'-0"	6
12'-3" THRU 14'-0"	7
14'-3" THRU 16'-0"	8
16'-3" THRU 18'-0"	9

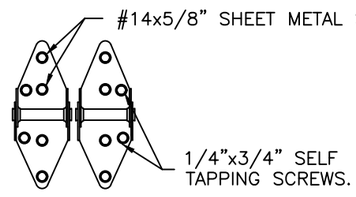

14 GA. END HINGES
VIEW "B"

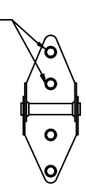

14 GA. (MIN.) INTERMEDIATE HINGE
VIEW "C"

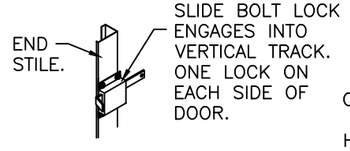

INSIDE SLIDE BOLT LOCK OPTION.

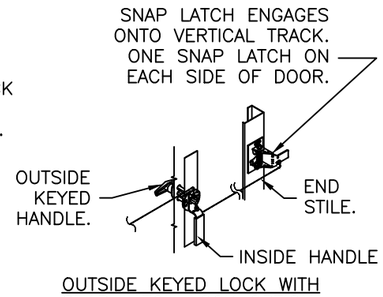

OUTSIDE KEYED LOCK WITH SNAP LATCH LOCK OPTION.

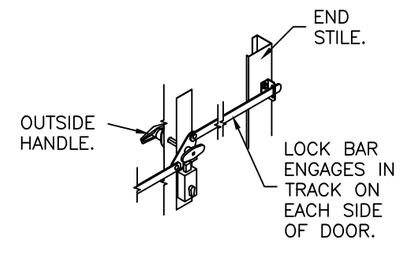

OUTSIDE KEYED LOCK WITH LOCK BAR LOCKING.

JAMES D. WHEELER
LICENSE
No. 91932
STATE OF FLORIDA
PROFESSIONAL ENGINEER

Digitally signed by Jim Wheeler
Date: 2025.10.17 10:36:00 -04'00'

DESIGN ENGINEER:
JAMES D. WHEELER, P.E.
FLORIDA LICENSE No. 91932

DESIGN LOADS: +37.0 P.S.F. & -42.0 P.S.F.
TEST LOADS: +55.5 P.S.F. & -63.0 P.S.F.

Unless Stated Otherwise TOLERANCES are
.0 = ±.031
.00 = ±.015
.000 = ±.005
.0000 = ±.001
Degrees = ±1/2°
Unless Stated Otherwise DIMENSIONS ARE IN INCHES.

Clopay CORPORATION
8585 Duke Boulevard
Mason, OH 45040 USA
Tel. No. 513-770-4800
Fax No. 513-770-4853

MANUFACTURING PRODUCT CODE: C-DSIU-1D477
PART NO.: N/A
WINDLOAD RATING: W6 DP37T

DESCRIPTION: 1-3/4" INTELLICORE DOORS UP TO 16'2"W (SEE TABLE)

DRAWN BY: SH	DATE: 1/10/13	SCALE: NTS	DWG. SIZE B
CHECKED BY: SH	DATE: 1/10/13	SHEET 1 OF 4	
DWG. NO.: 104801 – A/B		VER: IBC	

FLORIDA PRODUCT APPROVAL 16848

CLOPAY	IDEAL	HOLMES	
3717	C7X17	--	27GA 1.75" THICK MINOR RIB
3718	C7X18	--	27GA 1.75" THICK FLUSH
3720	C7X20	240U	27GA 2" THICK MINOR RIB
3722	COX22	--	20GA 2" THICK FLUSH
3724	C7X24	244U	24GA 2" THICK MINOR RIB
3730	--	--	27GA 3" THICK MINOR RIB

REVISIONS					
REV. NO.	ZONE:	DATE:	ECN NO.	APPVD:	DESCRIPTION
05	–	–	–	–	SEE REVISION HISTORY ON SHEET ONE.

IMPACT–RESISTANT CONSTRUCTION:

SOLID DOORS (NO GLAZING) OR DOORS WITH OPTIONAL IMPACT–RESISTANT GLAZING ARE IMPACT–RESISTANT. OPTIONAL IMPACT RESISTANT ASSEMBLY CONSISTS OF ALUMINUM FRONT FRAME GE LEXAN MR10, AN APPROVED CC1 PLASTIC IN ACCORDANCE WITH IBC/FBC 2606 AND AN APPROVED C1 PLASTIC IN ACCORDANCE WITH FBC 2612. THE ENTIRE DOOR ASSEMBLY INSTALLED IN COMPLIANCE WITH THIS SECTION MEETS THE WIND LOAD REQUIREMENTS OF THE FLORIDA BUILDING CODE AND INTERNATIONAL BUILDING CODE AND IS LARGE– AND SMALL–MISSILE IMPACT RESISTANT.

SECTION B–B (IMPACT–RESISTANT GLAZING OPTION)

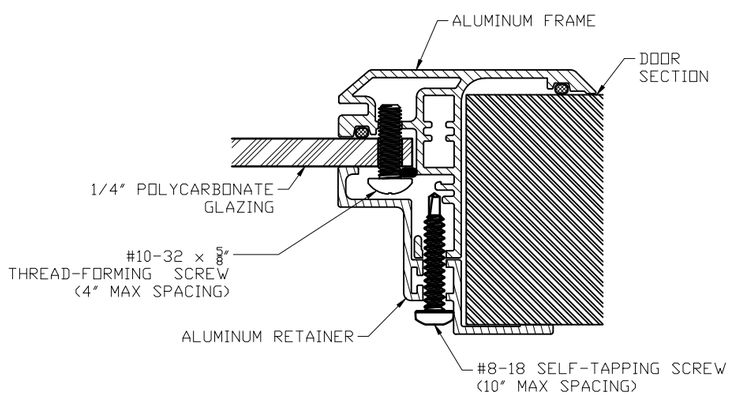

IMPACT–RESISTANT ASSEMBLY DETAILS
DRAWING 104801-A

DESIGN LOADS: +37.0 P.S.F. & –42.0 P.S.F.
TEST LOADS: +55.5 P.S.F. & –63.0 P.S.F.

MANUFACTURING PRODUCT CODE: C-DSIU-1D477

PART NO.: N/A

WINDLOAD RATING: W6 DP37T

Unless Stated Otherwise TOLERANCES are
.0 = ±.031
.00 = ±.015
.000 = ±.005
.0000 = ±.001
Degrees = ±1/2°
Unless Stated Otherwise DIMENSIONS ARE IN INCHES.

Clopay CORPORATION
8585 Duke Boulevard
Mason, OH 45040 USA
Tel. No. 513-770-4800
Fax No. 513-770-4853

DESCRIPTION: 1–3/4" INTELLICORE DOORS UP TO 16'2"W (SEE TABLE)

DRAWN BY: SH	DATE: 1/10/13	SCALE: NTS	DWG. SIZE B
CHECKED BY: SH	DATE: 1/10/13	SHEET 2 OF 4	
DWG. NO.: 104801 – A/B		VER: IBC	

DESIGN ENGINEER:
JAMES D. WHEELER, P.E.
FLORIDA LICENSE No. 91932

FLORIDA PRODUCT APPROVAL 16848

CLOPAY	IDEAL	HOLMES	
3717	C7X17	--	27GA 1.75" THICK MINOR RIB
3718	C7X18	--	27GA 1.75" THICK FLUSH
3720	C7X20	240U	27GA 2" THICK MINOR RIB
3722	COX22	--	20GA 2" THICK FLUSH
3724	C7X24	244U	24GA 2" THICK MINOR RIB
3730	--	--	27GA 3" THICK MINOR RIB

REVISIONS					
REV. NO.	ZONE:	DATE:	ECN NO.	APPVD:	DESCRIPTION
05	–	–	–	–	SEE REVISION HISTORY ON SHEET ONE.

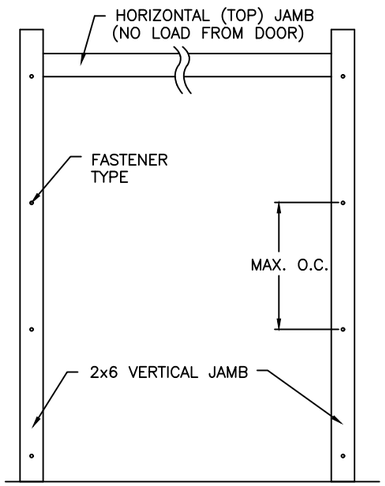

JAMB TO SUPPORTING STRUCTURE ATTACHMENT

NOTES:
1. ALL THE LOAD FROM THE DOOR IS TRANSFERRED TO THE TRACK AND THEN FROM THE TRACK TO THE 2x6 VERTICAL SYP (GRADE #2 OR BETTER) JAMBS. NO LOAD FROM THE DOOR IS TRANSFERRED TO THE HORIZONTAL (TOP) JAMB.
2. EACH VERTICAL JAMB SEES A MAXIMUM DESIGN LOAD OF +296 LB & −336 LB. PER LINEAR FOOT OF JAMB.
3. ALL JAMB FASTENERS MAY BE (BUT ARE NOT REQUIRED TO BE) COUNTERSUNK TO PROVIDE A FLUSH MOUNTING SURFACE.
4. A 1/3 STRESS INCREASE FOR WIND LOAD WAS NOT USED IN THE CALCULATION OF ALLOWABLE LOADS FOR ANCHORS AND FASTENERS FOR STEEL, CONCRETE AND MASONRY.

NOTE: 2x6 WOOD JAMBS ARE NOT REQUIRED WITH CONTINUOUS ANGLE MOUNT TRACK. HOWEVER, IF DESIRED ON STEEL JAMBS OR CONCRETE OR BLOCK WALLS, APPROVED FASTENERS AS DETAILED BELOW SHOULD BE INCREASED IN LENGTH BY 1−1/2" AND INSTALLED DIRECTLY THROUGH THE ANGLE AND 2x6 WOOD JAMBS INTO THE STEEL JAMBS OR CONCRETE OR BLOCK WALLS. ANCHORS CAN BE (BUT ARE NOT REQUIRED TO BE) COUNTERSUNK TO PROVIDE A FLUSH MOUNTING SURFACE. CONTINUOUS ANGLE TRACK CAN BE ANCHORED DIRECTLY TO GROUT REINFORCED BLOCK WALL OR 3,000 PSI MIN. CONCRETE COLUMN OR STEEL JAMBS.

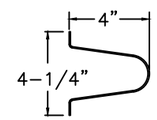

VIEW "D"
4" TALL TAPER STRUT.
0.062" MIN. GALV. STEEL,
80 KSI MIN.

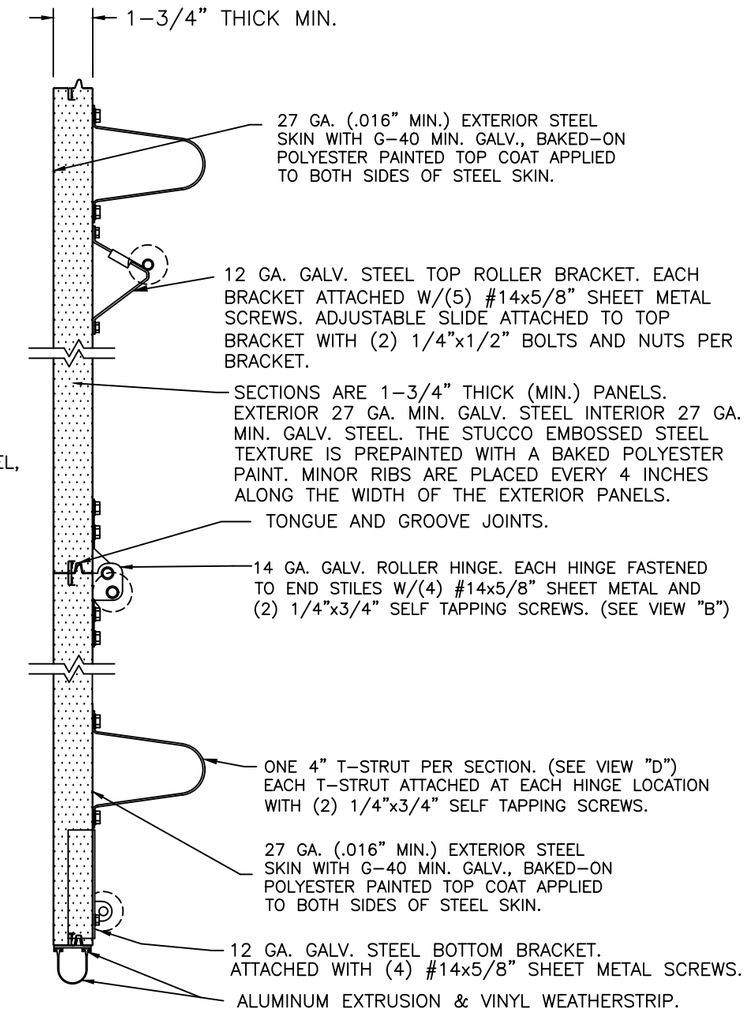

SECTION A−A (SIDE VIEW)

FASTENER ATTACHMENT TO SUPPORTING STRUCTURE SCHEDULES

BUILDING TYPE	FASTENER TYPE	MAXIMUM ON−CENTER DISTANCE BETWEEN FASTENERS*	STEEL WASHERS REQUIRED?
HOLLOW BLOCK WALL	1/4" x 1−1/4" MIN. EMBED ULTRACON CONCRETE ANCHOR	5−1/2"	1" O.D.
GROUT FILLED BLOCK WALL	1/4" x 1−3/4" MIN. EMBED ULTRACON CONCRETE ANCHOR	9−1/4"	1" O.D.
2000 PSI MIN. CONCRETE	1/4" x 1" MIN. EMBED ULTRACON CONCRETE ANCHOR	8"	1" O.D.
2000 PSI MIN. CONCRETE	1/4" x 1" MIN. EMBED TAPCON CONCRETE ANCHOR	6−3/4"	1" O.D.
2000 PSI MIN. CONCRETE	3/8" x 1−3/4" MIN. EMBED WEJ−IT ANKR TITE SLEEVE ANCHOR	17"	INCLUDED
4000 PSI MIN. CONCRETE	3/8" x 1−3/4" MIN. EMBED WEJ−IT ANKR TITE SLEEVE ANCHOR	24"	INCLUDED
WOOD FRAME (SYP 0.55 SG)	1/2" x 3" LAG SCREW (ASTM A307, GRADE A) 1−5/8" EMBED INTO STRUCTURE	18−1/4"	1" O.D.
14GA STEEL (0.060" MIN.)	1/4"−14 x 1" ITW BUILDEX TEKS SELF−DRILLING FASTENER	7−3/4"	1" O.D.
12GA STEEL (0.105" MIN.)	1/4"−14 x 1" ITW BUILDEX TEKS SELF−DRILLING FASTENER	13−1/2"	1" O.D.
1/8" STEEL	1/4"−14 x 1" ITW BUILDEX TEKS SELF−DRILLING FASTENER	16"	1" O.D.

* FIRST (BOTTOM) ANCHOR STARTING AT NO MORE THAN HALF OF THE MAXIMUM ON−CENTER DISTANCE. HIGHEST ANCHOR INSTALLED AT LEAST AS HIGH AS THE DOOR OPENING.
CLOPAY DOES NOT SUPPLY JAMB ATTACHMENT FASTENERS.
MINIMUM DISTANCE BETWEEN CENTER OF ANCHOR AND EDGE OF CONCRETE BLOCK: 2−1/2", EXCLUDING STUCCO THICKNESS.

DESIGN ENGINEER:
JAMES D. WHEELER, P.E.
FLORIDA LICENSE No. 91932

DESIGN LOADS: +37.0 P.S.F. & −42.0 P.S.F.
TEST LOADS: +55.5 P.S.F. & −63.0 P.S.F.

Unless Stated Otherwise TOLERANCES are
.0 = ±.031
.00 = ±.015
.000 = ±.005
.0000 = ±.001
Degrees = ±1/2°
Unless Stated Otherwise DIMENSIONS ARE IN INCHES.

Clopay CORPORATION
8585 Duke Boulevard
Mason, OH 45040 USA
Tel. No. 513−770−4800
Fax No. 513−770−4853

MANUFACTURING PRODUCT CODE: C-DSIU-1D477
PART NO.: N/A
WINDLOAD RATING: W6 DP37T
DESCRIPTION: 1−3/4" INTELLICORE DOORS UP TO 16'2"W (SEE TABLE)

DRAWN BY: SH	DATE: 1/10/13	SCALE: NTS	DWG. SIZE B
CHECKED BY: SH	DATE: 1/10/13	SHEET 3 OF 4	
DWG. NO.: 104801 − A/B		VER: IBC	

FLORIDA PRODUCT APPROVAL 16848

CLOPAY	IDEAL	HOLMES	
3717	C7X17	--	27GA 1.75" THICK MINOR RIB
3718	C7X18	--	27GA 1.75" THICK FLUSH
3720	C7X20	240U	27GA 2" THICK MINOR RIB
3722	COX22	--	20GA 2" THICK FLUSH
3724	C7X24	244U	24GA 2" THICK MINOR RIB
3730	--	--	27GA 3" THICK MINOR RIB

SHEET: 4 OF 4

REVISIONS					
REV. NO.	ZONE:	DATE:	ECN NO.	APPVD:	DESCRIPTION
05	–	–	–	–	SEE REVISION HISTORY ON SHEET ONE.

2" TRACK CONFIGURATION DOORS UP TO 800 LBS.

NOTE DOUBLE TRACK HEADROOM, HI-LIFT TRACK, FOLLOW-THE- ROOF TRACK, AND VERTICAL LIFT TRACK ARE AVAILABLE OPTIONS.
TRACK CONFIGURATION ABOVE THE DOOR OPENING DOES NOT AFFECT THE WIND LOAD RATING.

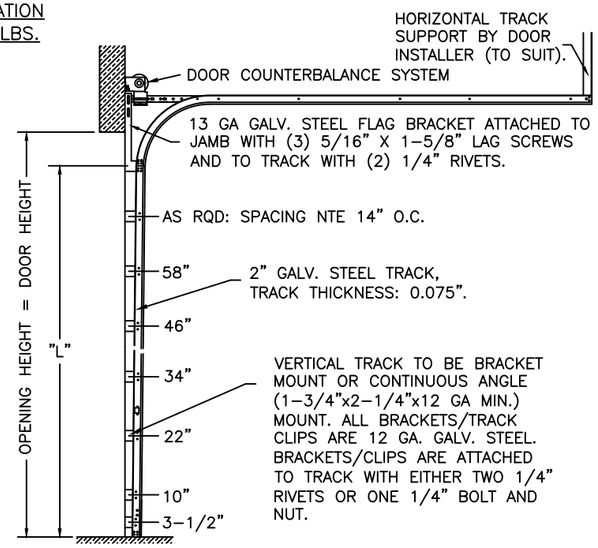

DOOR HEIGHT	"L"
6'-6"	70"
7'-0"	76"
7'-6"	82"
8'-0"	88"
8'-6"	94"
9'-0"	100"
9'-6"	106"
10'-0"	112"
10'-6"	118"
11'-0"	124"
11'-6"	130"
12'-0"	136"
12'-6"	142"
13'-0"	148"
13'-6"	154"
14'-0"	160"
14'-6"	166"
15'-0"	172"
15'-6"	178"
16'-0"	184"
16'-6"	190"
17'-0"	196"
17'-6"	202"
18'-0"	208"

JAMB CONFIGURATION DOORS UP TO 800 LBS.

BRACKET MOUNT JAMB CONFIGURATION

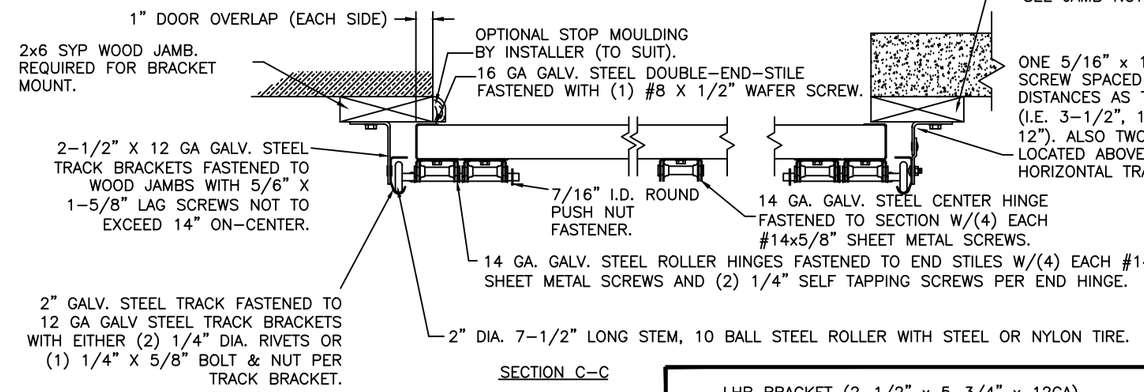

ANGLE MOUNT JAMB CONFIGURATION

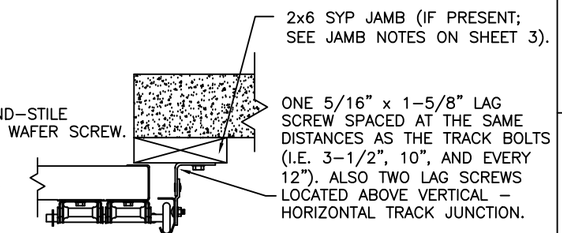

PREPARATION OF JAMBS BY OTHERS.

LHR BRACKET (2-1/2" x 5-3/4" x 12GA) ATTACHED WITH (2) 1/4" x 3/4" SELF TAPPING SCREWS. NOTE THAT LHR BRACKETS ARE ALSO USED WITH "DOUBLE END STILE" AS SHOWN IN ZONE B-3 SHEET 1.

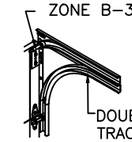

DOUBLE TRACK
LOW HEADROOM OPTION
(AVAIL. FOR BOTH 2" AND 3" TRACK)

3" TRACK CONFIGURATION DOORS 800 LBS AND OVER.

NOTE DOUBLE TRACK HEADROOM, HI-LIFT TRACK, FOLLOW-THE- ROOF TRACK, AND VERTICAL LIFT TRACK ARE AVAILABLE OPTIONS.
TRACK CONFIGURATION ABOVE THE DOOR OPENING DOES NOT AFFECT THE WIND LOAD RATING.

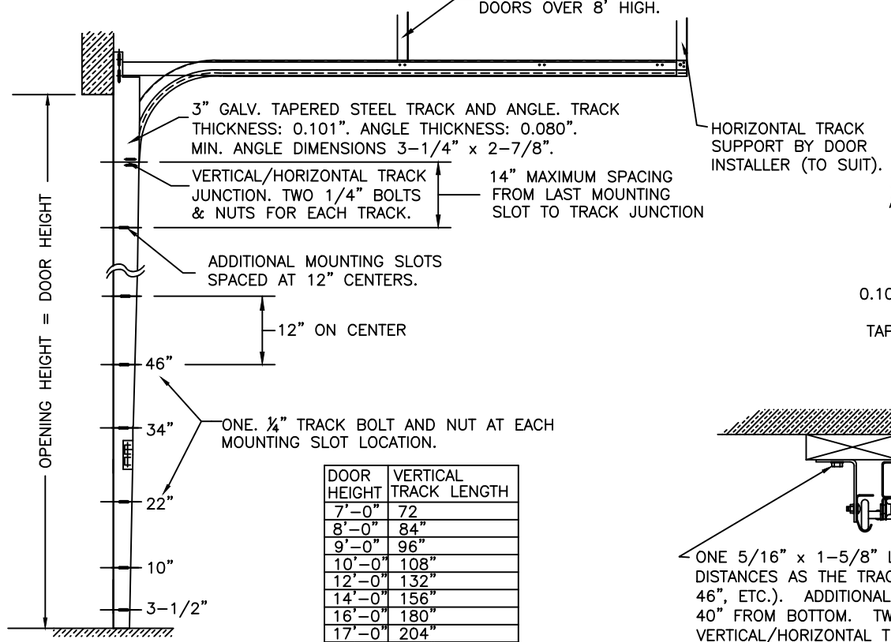

DOOR HEIGHT	VERTICAL TRACK LENGTH
7'-0"	72
8'-0"	84"
9'-0"	96"
10'-0"	108"
12'-0"	132"
14'-0"	156"
16'-0"	180"
17'-0"	204"
18'-0"	228"

JAMB CONFIGURATION DOORS 800 LBS AND OVER.

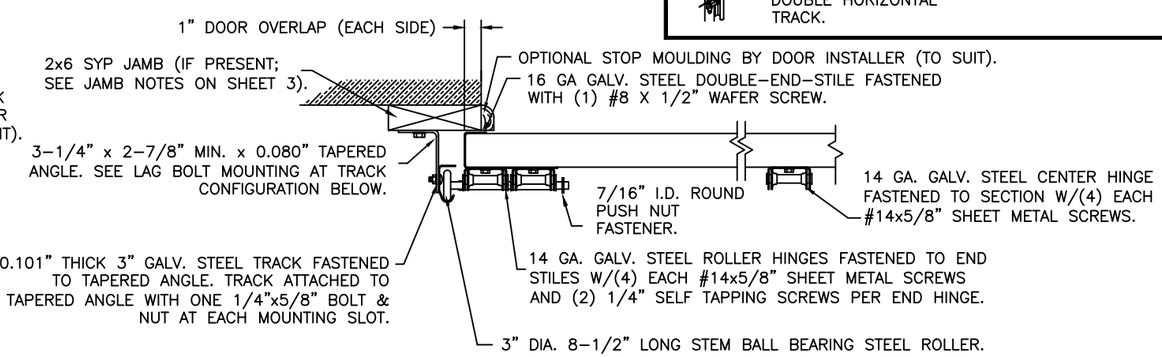

SECTION C-C

PREPARATION OF JAMBS BY OTHERS.

DESIGN LOADS: +37.0 P.S.F. & -42.0 P.S.F.
TEST LOADS: +55.5 P.S.F. & -63.0 P.S.F.

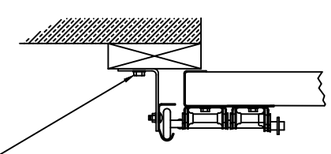

ONE 5/16" x 1-5/8" LAG SCREW SPACED AT THE SAME DISTANCES AS THE TRACK BOLTS (I.E. 3-1/2", 10", 22", 34", 46", ETC.). ADDITIONAL LAG SCREWS LOCATED AT 16", 28", & 40" FROM BOTTOM. TWO LAG SCREWS ALSO LOCATED ABOVE VERTICAL/HORIZONTAL TRACK JUNCTION.

Unless Stated Otherwise TOLERANCES are
.0 = ±.031
.00 = ±.015
.000 = ±.005
.0000 = ±.001
Degrees = ±1/2°
Unless Stated Otherwise DIMENSIONS ARE IN INCHES.

Clopay CORPORATION
8585 Duke Boulevard
Mason, OH 45040 USA
Tel. No. 513-770-4800
Fax No. 513-770-4853

MANUFACTURING PRODUCT CODE: C-DSIU-1D477
PART NO.: N/A
WINDLOAD RATING: W6 DP37T

DESCRIPTION: 1-3/4" INTELLICORE DOORS UP TO 16'2"W (SEE TABLE)			
DRAWN BY: SH	DATE: 1/10/13	SCALE: NTS	DWG. SIZE B
CHECKED BY: SH	DATE: 1/10/13	SHEET 4 OF 4	
DWG. NO.: 104801 – A/B		VER: IBC	

DESIGN ENGINEER:
JAMES D. WHEELER, P.E.
FLORIDA LICENSE No. 91932

FLORIDA PRODUCT APPROVAL 16848