NEMO|etc.
Certificate of Authorization #32455
353 Christian Street, Unit #13
Oxford, CT 06478
(203) 262-9245

ENGINEER **TEST** **CONSULT**

P.E. EVALUATION REPORT (PEER)

GAF
1 Campus Drive
Parsippany, NJ 07054
(800) 766-3411

PEER-GAF-001.B.R13
FL16624-R13 (NON-HVHZ)
Date of Issuance: 10/22/2013
Revision 13: 08/06/2026

SCOPE:
This P.E. Evaluation Report (henceforth 'PEER') is issued under **Rule 61G20-3** and the applicable rules and regulations governing the use of construction materials in the State of Florida. The documentation submitted has been reviewed by Robert Nieminen, P.E. for compliance with the **9th Edition (2026) Florida Building Code** sections referenced herein.

DESCRIPTION: GAF Master Flow™ Attic Ventilation & Rooftop Accessory Products (NON-HVHZ)

LABELING: Labeling shall be in accordance with the requirements of the Accredited Quality Assurance Agency noted herein.

CONTINUED COMPLIANCE: This PEER is valid until such time as the named product(s) changes, the referenced Quality Assurance or production facility location(s) changes, or Code provisions that relate to the product(s) change. Acceptance of our PEERs by the named client constitutes agreement to notify NEMO ETC, LLC of any changes to the product(s), the Quality Assurance or the production facility location(s). NEMO ETC, LLC requires a complete review of its PEER relative to updated Code requirements with each Code Cycle. Reference is made to the NEMO|etc. Directory of P.E. Evaluations to ascertain the status and/or current version of this PEER. If the PEER is not listed at the Nemo Directory, then it is no longer valid.

ADVERTISEMENT: "NEMO P.E. Evaluated" may be displayed in advertising literature. If any portion of the PEER is displayed, then it shall be in its entirety.

INSPECTION: Upon request, a copy of this entire PEER shall be provided to the user by the manufacturer or its distributors and shall be available for inspection at the job site at the request of the Building Official.

This PEER consists of pages 1 through 11.

Prepared by:

Digitally signed by Robert Nieminen
Date: 2026.08.06 '15:52:00 -04'00

This item has been digitally signed and sealed by Robert Nieminen, P.E.
Printed copies of this document are not considered signed and sealed, and the signature must be verified on any electronic copies.
Robert Nieminen, Florida P.E. 59166, FBC ANE1983
NEMO ETC, LLC, Florida CA #32455

ROBERT NIEMINEN
LICENSE
NO. 59166
STATE OF
FLORIDA
PROFESSIONAL ENGINEER

CERTIFICATION OF INDEPENDENCE:

1. NEMO ETC, LLC does not have, nor does it intend to acquire or will it acquire, a financial interest in any company manufacturing or distributing products it evaluates.
2. NEMO ETC, LLC is not owned, operated or controlled by any company manufacturing or distributing products it evaluates.
3. Robert Nieminen, P.E. does not have nor will acquire, a financial interest in any company manufacturing or distributing products for which the PEERs are being issued.
4. Robert Nieminen, P.E. does not have, nor will acquire, a financial interest in any other entity involved in the approval process of the product.
5. This is a building code evaluation. Neither NEMO ETC, LLC nor Robert Nieminen, P.E. are, in any way, the Designer of Record for any project on which this PEER, or previous versions thereof, is/was used for permitting or design guidance unless retained specifically for that purpose.

© 2019 NEMO ETC, LLC

2026 FBC NON-HVHZ

ROOFING COMPONENT EVALUATION:

1. SCOPE:

Product Category: Roofing
Sub-Category: Roofing Accessories that are an Integral Part of the Roofing System
Product Approval Method: Method 1, Option D – Codified Material, Evaluation by Engineer
Compliance Statement: GAF Master Flow™ Attic Ventilation & Rooftop Accessory Products, as produced by **GAF**, have demonstrated compliance with the following sections of the **9th Edition (2026) Florida Building Code** through testing in accordance with the following Standards. Compliance is subject to the Installation Requirements and Limitations / Conditions of Use set forth herein.

2. CODE SECTIONS:

SECTION	PROPERTY	STANDARD
1504.3	Wind resistance	ASTM E330
1523.6.5.2.13	Wind Driven Rain	TAS 100(A)
2606.4	Rate of burning	ASTM D635
2606.4	Self-ignition temperature	ASTM D1929
2615.2	Weatherometer	ASTM G155

3. REFERENCES:

ENTITY	EXAMINATION	REFERENCE	DATE
ITS (TST1558)	ASTM D635, D638, D1929, D2843, G155	Q3050.01-106-18	07/29/2024
ITS (TST1558)	Wind Driven Rain	S5729.01-109-18	07/25/2025
GAF	Traceability	Declaration	07/11/2022
PRI (TST5878)	Wind Driven Rain	LLB-027-02-01	01/23/2015
PRI (TST5878)	Wind Driven Rain	LLB-027-02-01 (extension)	01/28/2016
PRI (TST5878)	Physical Properties / Weatherometer	GAF-138-02-06	06/06/2008
PRI (TST5878)	Wind Driven Rain	LLB-019-02-01	07/12/2013
PRI (TST5878)	Wind Driven Rain	GAF-739-02-01	11/30/2016
PRI (TST5878)	Wind Driven Rain	376T0351	12/14/2022
PRI (TST5878)	ASTM E330	376T0427	06/30/2023
UL, LLC (QUA9625)	Quality Control	Service Confirmation	04/15/2025
UL, LLC (QUA9625)	Quality Control	Florida BCIS	Current

2026 FBC NON-HVHZ

4. PRODUCT DESCRIPTION:

TABLE 1: EVALUATED VENTILATION PRODUCTS			
PRODUCT	**PLANT(S)**	**DESCRIPTION**	**PUBLISHED NFVA[i]**
Master Flow™ GreenMachine™ High-Power Solar and Dual Powered Roof Vents	Burgaw, NC	Off-ridge, solar powered mechanical roof exhaust vents with a base and hood of polymer-injection mold fabrication (Figure 1, below). Two models; the Solar Powered Model (PRSOLAR2) and the Dual Powered Model (PRHYBRID2).	750 CFM airflow (solar operation) 900 CFM airflow (AC operation)

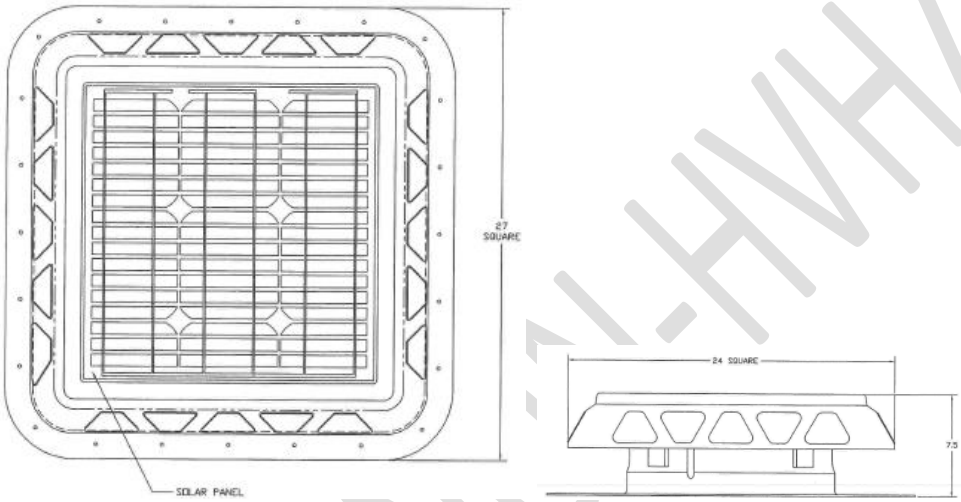

Figure 1: Master Flow® GreenMachine™ High-Power Solar and Dual Powered Roof Vents

Master Flow™ GreenMachine™ Solar and Dual Powered Roof Vents	Burgaw, NC	Off-ridge, solar powered mechanical roof exhaust vent with a 0.020-inch thick galvanized steel base and hood (Figure 2, below). Two models; the Solar Powered Model (ERVSOLAR) and the Dual Powered Model (ERVHYBRID).	525 CFM airflow (solar operation) 750 CFM airflow (AC operation)
Master Flow™ Power Attic Vent ERV4 – Roof Mount	Burgaw, NC	Off-ridge, powered mechanical roof exhaust vent with a 0.020-inch thick galvanized steel base and hood (Figure 2, below) and a 1/12 horsepower motor. Includes thermostat or an optional humidistat/thermostat (ERV4HT).	1,000 CFM airflow
Master Flow™ Power Attic Vent ERV5 – Roof Mount	Burgaw, NC	Off-ridge, powered mechanical roof exhaust vent with a 0.020-inch thick galvanized steel base and hood (Figure 2, below) and a 1/12 horsepower motor. Includes thermostat, or optional QuickConnect™ Wi-Fi Technology (ERV5QCT), or an optional humidistat/thermostat (ERV5HT).	1,250 CFM airflow
Master Flow™ Power Attic Vent ERV6 or ERV8 – Roof Mount	Burgaw, NC	Off-ridge, powered mechanical roof exhaust vent with a 0.020-inch thick galvanized steel base and hood (Figure 2, below) and a 1/5 horsepower motor. Includes thermostat or an optional humidistat/thermostat (ERV6HT or ERV8HT).	1,500 CFM airflow
Master Flow™ High Capacity Dome Vent – HCD144	Burgaw, NC	Off-ridge, static roof exhaust vent with a 0.020-inch thick galvanized steel base and hood (Figure 2, below)	144 in^2
Master Flow EZ Cool™ Plug-in Power Attic Vent (EZCR1)	Burgaw, NC	Off-ridge, powered mechanical roof exhaust vent with a 0.020-inch thick galvanized steel base and hood (Figure 2, below) and a motor with thermostat or an optional humidistat/thermostat (EZCR1HT).	1,050 CFM airflow

2026 FBC NON-HVHZ

TABLE 1: EVALUATED VENTILATION PRODUCTS			
PRODUCT	**PLANT(S)**	**DESCRIPTION**	**PUBLISHED NFVA[i]**
Master Flow EZ Cool™ Plug-in Power Attic Vent Roof Mount (EZCR3)	Burgaw, NC	Off-ridge, powered mechanical roof exhaust vent with a 0.020-inch thick galvanized steel base and hood (Figure 2, below) and a motor, includes thermostat and an optional humidistat/thermostat (EZCR3HT).	1,500 CFM airflow

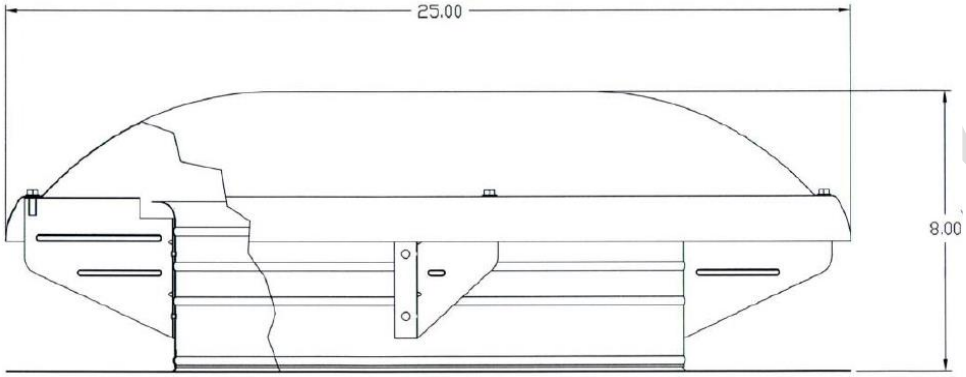

Figure 2: Master Flow™ GreenMachine™ Solar Powered Roof Vent (ERVSOLAR), Master Flow™ GreenMachine™ Dual Powered Roof Vent (ERVHYBRID), Master Flow™ Power Attic Vent – Roof Mount ERV4, ERV5, ERV6 or ERV8, Master Flow™ High Capacity Dome Vent – HCD144, Master Flow EZ Cool™ Plug-in Power Attic Vent (EZCR1, EZCR1HT, EZCR3 or EZCR3HT)

2026 FBC NON-

TABLE 1: EVALUATED VENTILATION PRODUCTS			
PRODUCT	**PLANT(S)**	**DESCRIPTION**	**PUBLISHED NFVA[i]**
Master Flow™ Pivot™ Pipe Boot Flashing	Burgaw, NC	Pipe boot flashing with a built-in ball and socket "pivot" feature for simple rooftop pitch adjustment, with up to 18-inch wide flashing base, and available in multiple sizes to accommodate pipe's inside diameter/height (Figure 3, below).	N/A

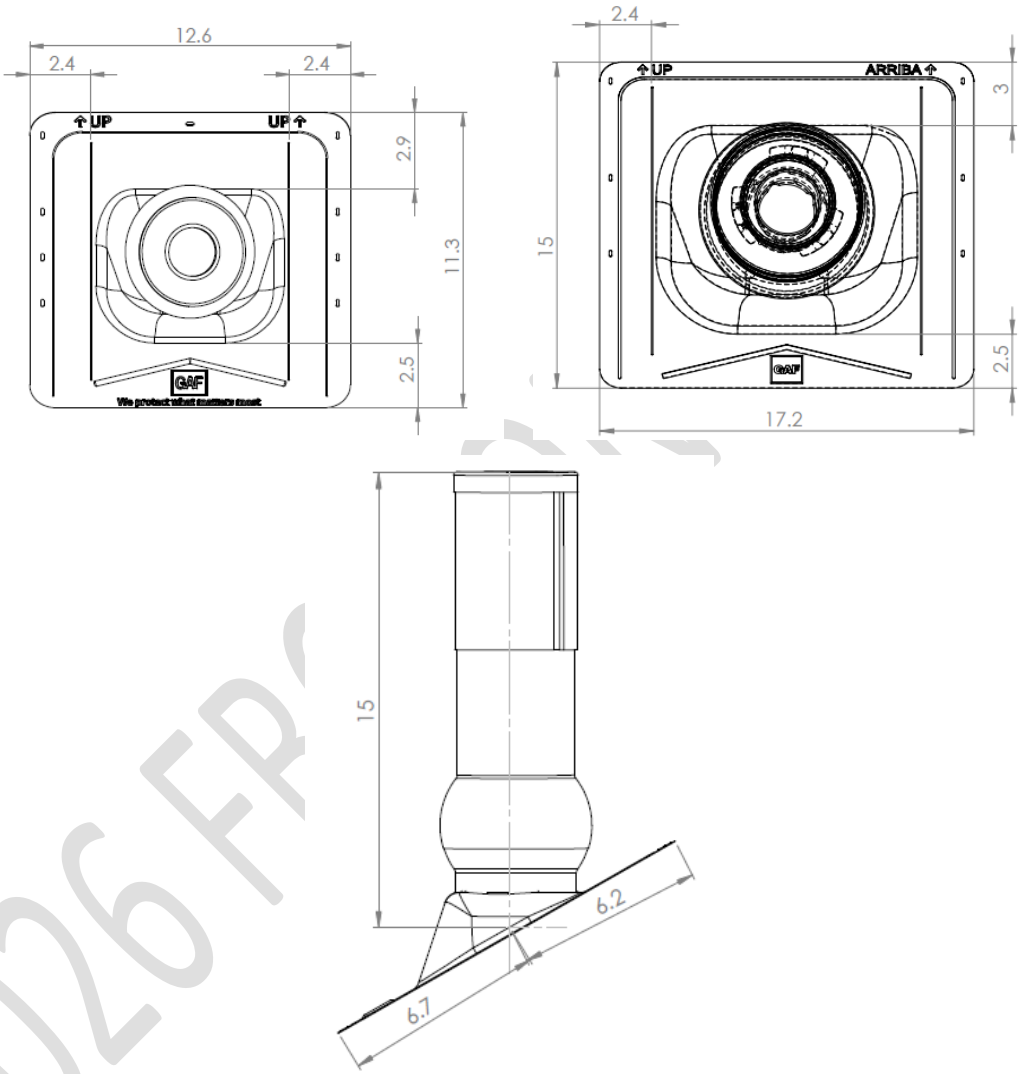

Figure 3: Master Flow™ Pivot™ Pipe Boot Flashing

TABLE 1: EVALUATED VENTILATION PRODUCTS			
PRODUCT	**PLANT(S)**	**DESCRIPTION**	**PUBLISHED NFVA[i]**
Master Flow™ Bath & Dryer Rooftop Appliance Vent (BDV4)	Burgaw, NC	Off-ridge, static roof exhaust vent with a 0.020-inch thick galvanized steel base and vent, compatible with 3-inch and 4-inch round ducts.	12.5 in^2

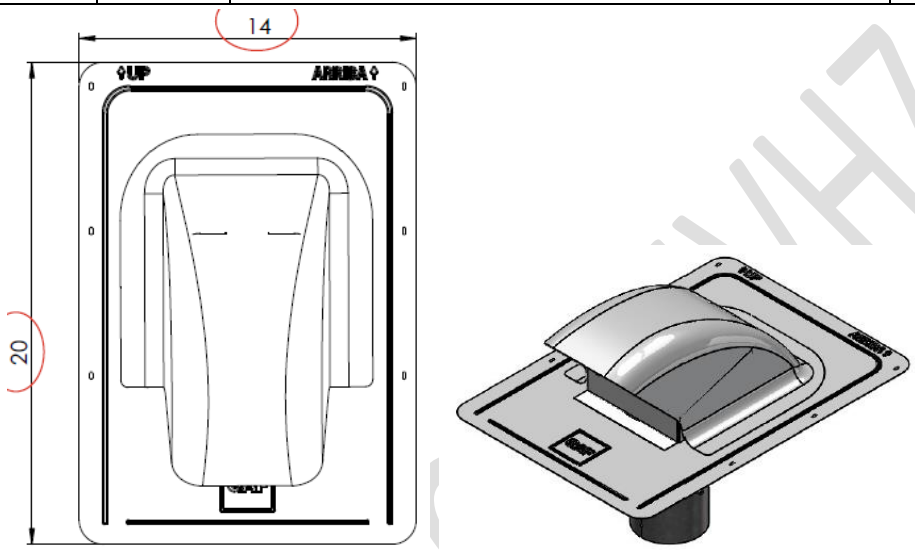

5. LIMITATIONS:

5.1 This is a building code evaluation. Neither NEMO ETC, LLC nor Robert Nieminen, P.E. are, in any way, the Designer of Record for any project on which this PEER, or previous versions thereof, is/was used for permitting or design guidance. PEERs are not to be construed as representing any attributes not specifically listed, nor are PEERs to be construed as an endorsement of the subject, or a recommendation for its use. There is no warranty by NEMO ETC, LLC or Robert Nieminen, P.E., express or implied, as to any finding or other matter in this PEER, or as to any product covered by the PEER.

5.2 This PEER is not for use in FBC High Velocity Hurricane Zone jurisdictions, as defined in FBC Chapter 2 (Broward and Miami-Dade Counties).

5.3 This PEER pertains to above-deck roof components. Roof decks and structural members shall be in accordance with FBC requirements to the satisfaction of the Authority Having Jurisdiction.

5.4 **Slope:**

5.4.1 The minimum slope shall be the greater of 2:12 vs. that published by **GAF**.

5.4.2 The maximum slope for the installation of **Master Flow™ Pivot™ Pipe Boot Flashing** is 12:12.

5.4.3 The maximum slope for the installation of **Master Flow™ Bath & Dryer Rooftop Appliance Vent** is 18:12.

2026 FBC NON-HVHZ

5.5 **Wind Classification:**

5.5.1 When installed in accordance with GAF standard attachment procedures, installation is limited to maximum 33 ft mean roof height in Exposure B or C conditions. Refer to FBC 1609 or FBCR Chapter 3 for design wind speeds and exposure categories.

5.5.2 For installation on buildings outside these limitations, the performance limitations set forth in Table 2 may be utilized. Allowable Design Pressure is the result of testing for wind load resistance based on allowable wind loads, and reflects the ultimate passing pressure divided by 2 (the 2 to 1 margin of safety per **FBC 1504.9** has already been applied). The Allowable Design Pressure shall meet or exceed critical design pressure determined by a qualified design professional in accordance with **FBC Chapter 16** or **FBCR Chapter 3**. No rational analysis is permitted.

TABLE 2: ALLOWABLE WIND UPLIFT

SUBSTRATE:	PRODUCT	FASTENING	ALLOWABLE DESIGN PRESSURE (PSF)
Min. 7/16-inch PS2, APA span rated OSB sheathing	Master Flow™ Pivot™ Pipe Boot Flashing	Six (6) 12 ga. x 1.5-inch corrosion resistant, ring shank roofing nails at pre-punched nail locations	-100
Min. 15/32-inch, PS1 APA span rated, CDX plywood			-130

5.6 **GAF Master Flow™ Attic Ventilation & Rooftop Accessory Products** are for use with any shingle material other than aluminum.

5.7 Installation shall result in minimum net free ventilation area requirements set forth in **FBC 1203.2**.

5.8 Corrosion Resistance – Saltwater Environments:
Fasteners and connectors, if applicable, in areas within 3,000 feet of a saltwater coastline shall demonstrate compliance with FBC 1711 to the satisfaction of the Authority Having Jurisdiction.

6. INSTALLATION:

6.1 **GAF Master Flow™ Attic Ventilation & Rooftop Accessory Products** shall be installed in accordance with **GAF** published installation requirements subject to the Limitation of Use herein and the specifics noted below.

6.1.1 The specifics herein pertain to attachment of the vent to the roof deck, as tested, to meet wind load requirements at mean roof height less than or equal to 33 ft. Refer to published installation requirements for other important aspects of the installation.

2026 FBC NON-HVHZ

6.2 Master Flow™ GreenMachine™ High-Power Solar and Dual Powered Roof Vents:

6.2.1 After locating, measuring, marking, cutting-out and testing the position, remove the unit from the test position and apply ASTM C920 urethane sealant such as Henkel PL® or Sonneborne® NP-1™ at the perimeter of the underside of the unit's horizontal flange. Apply sealant in two ¼-inch diameter continuous beads around the entire perimeter; the first approximately 1-inch from the vent stack wall; the second approximately 1-inch from the flange edge. Align the unit over the cut-out and slide into place with the top half of the flange beneath shingles and the bottom half of the flange atop shingles. Ensure that the arrow marked on the flange points up towards the roof peak. Ensure complete contact between the sealant and the roof deck at the top half and between the sealant and the shingles at the bottom half.

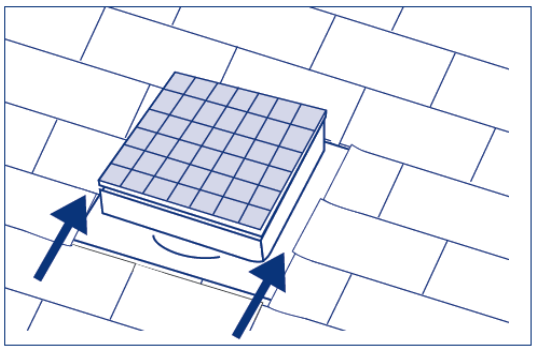

6.2.2 Fasten the horizontal flange to the min. 15/32-inch thick, 4-ply APA 32/16 span rated plywood roof deck using 12 ga, min. 1.25-inch long galvanized ring shank roofing nails at the guide-marks on the flange, located at all four corners and 4-inch o.c. at the perimeter. Finish by sealing exposed nail heads and sealing-down any raised shingles at the top half of the flange using the urethane sealant noted above.

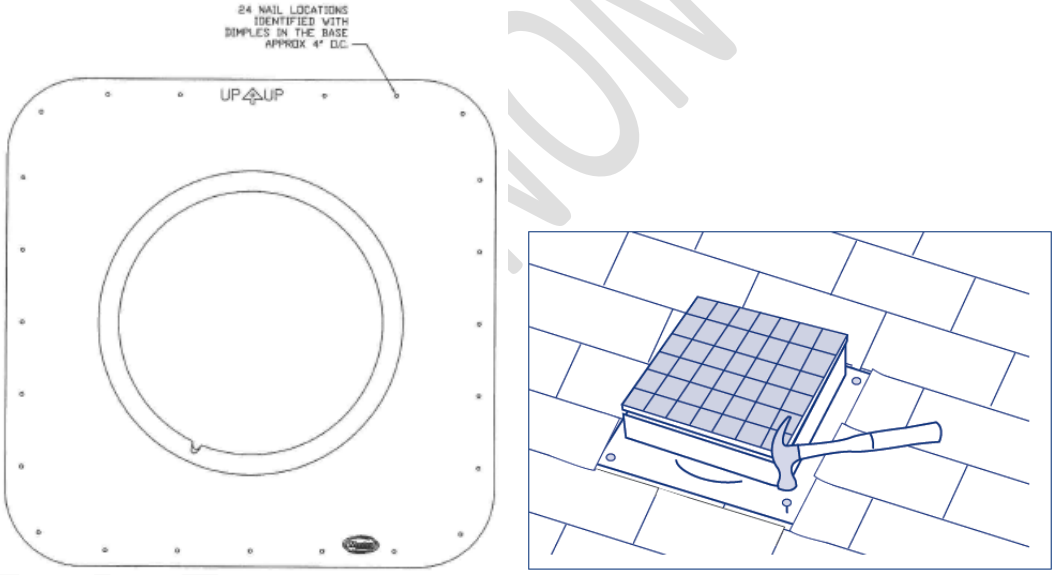

Figure 1: Nailing Pattern

6.3 Master Flow™ GreenMachine™ Solar Powered Roof Vent (ERVSOLAR), Master Flow™ GreenMachine™ Dual Powered Roof Vent (ERVHYBRID), Master Flow™ Power Attic Vent – Roof Mount ERV4, ERV5, ERV6 or ERV8, Master Flow™ High Capacity Dome Vent – HCD144 or Master Flow EZ Cool™ Plug-in Power Attic Vent (EZCR1, EZCR1HT, EZCR3 or EZCR3HT):

6.3.1 After locating, marking, cutting and preparing the opening in accordance with **GAF** published requirements, apply ASTM C920 sealant to the to the underside of the vent's base unit as follows:

- ✓ One ½-inch wide bead around the inner perimeter, located ¾-inch from the circular throat.
- ✓ One ½-inch wide bead around the outer perimeter, located ¾-inch from the outside edges.

Slide the vent up under the top shingles, with the arrow on the flashing pointing up-slope. Leave the lower portion of the vent flashing on top of the shingles.

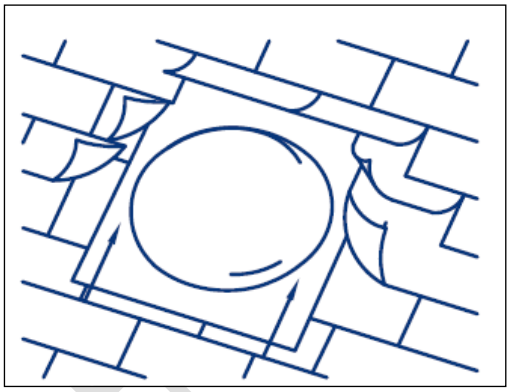

6.3.2 Fasten the base flange to the min. 15/32-inch thick APA span rated plywood roof deck using twenty (20) minimum 12 ga, min. 1.5-inch long corrosion resistant roofing nails as follows:

- ✓ 1-inch from the base edge, at all four corners and 5.75-inch o.c. at the perimeter.
- ✓ 1-inch from the base unit throat at 90° around the circular opening.

Finish by sealing exposed nail heads and sealing-down any raised shingles at the top half of the flange using the roofing cement or urethane sealant noted above.

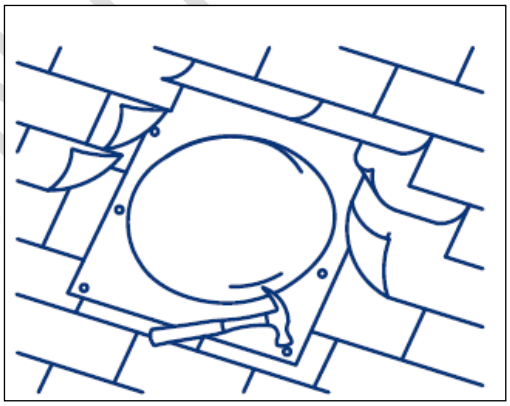

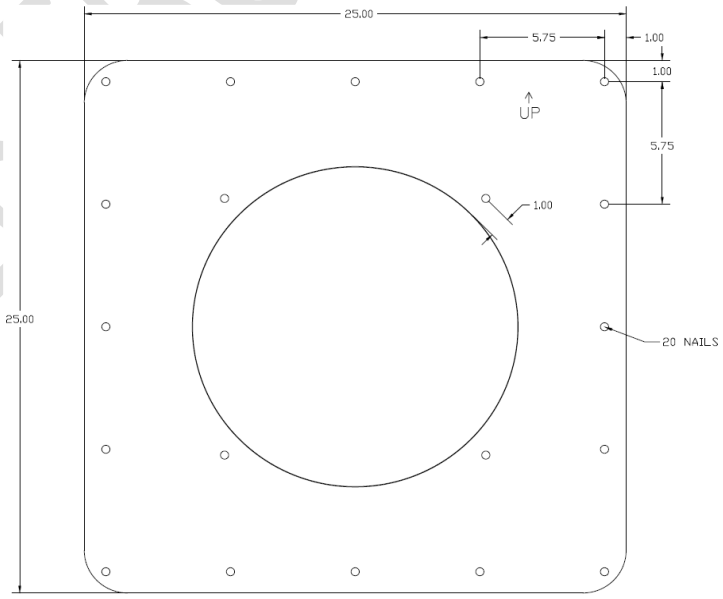

Figure 2: Nailing Pattern

2026 FBC NON

6.4 Master Flow™ Pivot™ Pipe Boot Flashing:

6.4.1 After locating, marking, cutting and preparing the opening around the plumbing vent pipe in accordance with **GAF** published requirements, apply ASTM C920 sealant to the underside of the base flashing as follows:

- ✓ One ½-inch wide bead applied in a "U" shape pattern underneath the bottom and sides of the base flashing with a ¼-inch gap in sealant under bottom section.

Slide the boot up under the top shingles, with the arrow on the flashing pointing up towards the roof peak. Use the base flashing's pivot feature to adjust for the appropriate rooftop pitch and to center the plumbing pipe in the base flashing. Leave the lower portion of the base flashing on top of the shingles.

Secure pivot cap by gently turning the pipe insert clockwise. Align pipe insert with inside diameter opening of plumbing pipe and press cap down firmly into place on the base flashing tube. Do not over twist the cap.

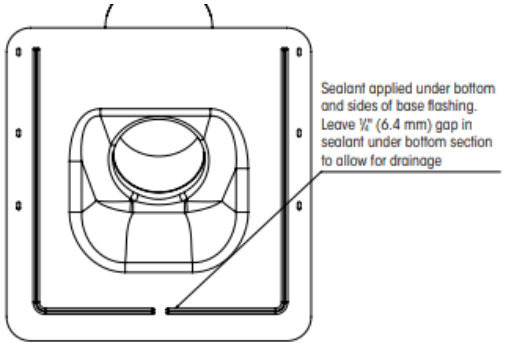

6.4.2 Fasten the base flashing to the min. 15/32-inch thick APA span rated plywood roof deck using 12 ga, min. 1.25-inch long galvanized ring shank roofing nails at the pre-punched nail guides on the flashing, located 1-inch from outside edge and 5-inch o.c. around the sides and back flashing. Finish by sealing exposed nail heads and sealing-down any raised shingles at the top half of the flange using the roofing sealant noted above.

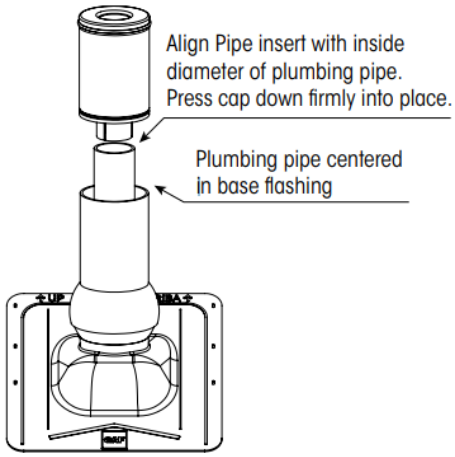

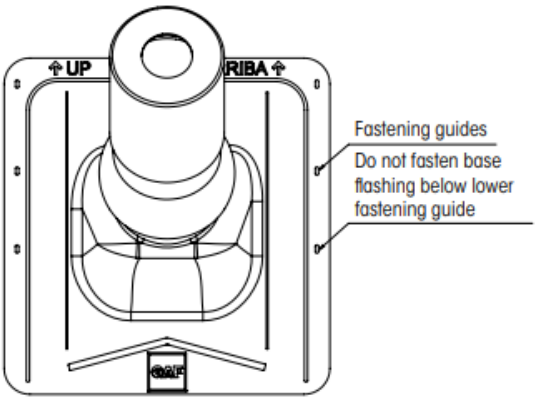

Figure 3: Nailing Pattern

2026 FBC NON-H

6.5 Master Flow™ Bath & Dryer Rooftop Appliance Vent:

6.5.1 After locating, marking, cutting and preparing the opening around the appliance vent, and installing the 24x24-inch piece of leak barrier membrane, in accordance with **GAF** published requirements, apply ASTM C920 sealant as follows:

- ✓ To the underside of the base flashing, apply one ½-inch wide bead in a "U" shape pattern underneath the bottom and sides of the base flashing with a ¼-inch gap in sealant under bottom section.
- ✓ To the leak barrier membrane, apply one ½-inch wide bead around the circumference of the cut-out in the roof deck.

The lower portion of the base flashing must sit on top of the shingle course below the opening. Slide the vent up under the top shingles, with the arrow on the flashing pointing up towards the roof peak, insert the vent's neck into the opening.

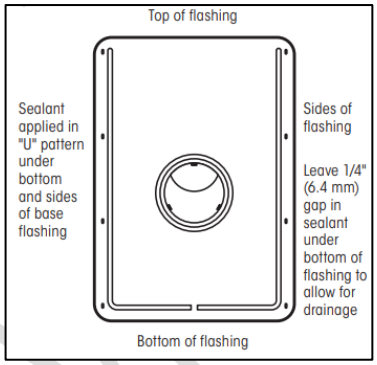

6.5.2 Fasten the base flashing to the min. 15/32-inch thick APA span rated plywood roof deck using 12 ga. corrosion resistant, ring shank roofing nails at the pre-punched fastening slots located on both sides of the base flashing.

Nails shall be of sufficient length for full-penetration through plywood decks or min. ¾" embedment into wood plank decks.

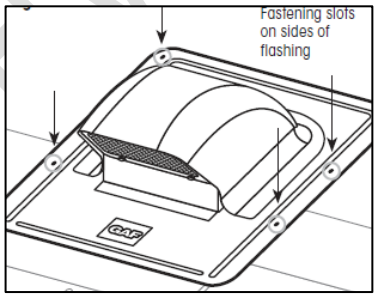

6.5.3 Continue installing shingles, overlapping the base flashing on both the top and sides of the vent. Terminate/Cut shingles around the top and sides to match the shape of the vent's hood. Finish by sealing-down any raised shingles at the top half of the flange using ASTM D4585, Type I or II roofing cement or ASTM C920 sealant.

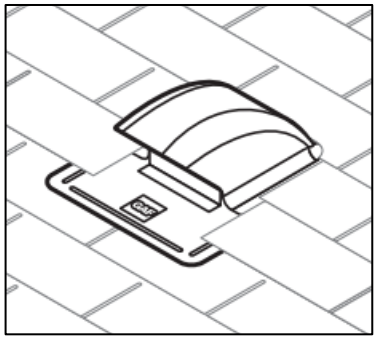

7. Building Permit Requirements:

As required by the Building Official or Authority Having Jurisdiction to properly evaluate the installation of this product.

8. Manufacturing Plants:

Contact the named QA entity for manufacturing facilities covered by **F.A.C. Rule 61G20-3** QA requirements. Refer to Section 4 herein for products and production locations having met codified material standards.

9. Quality Assurance Entity:

UL, LLC. (QUA9625): (360) 817-5512; bsai.inspections@ul.com

- END OF PEER -

[i] *Net Free Ventilation Area reported herein is as published by the manufacturer at the time of evaluation. The report user should verify current published data at the time of design and/or permitting to the satisfaction of the Authority Having Jurisdiction.*

2026 FBC NON-HVHZ