MODELS	SHORT	LONG
CLOPAY GALLERY	GD2SP, GR2SP	GD2LP, GR2LP
HOLMES ARTISTRY	AR2SP	AR2LP
IDEAL EXPRESSIONS	ED2SP	ED2LP

MODELS	FLUSH	GROOVED
CLOPAY CLASSIC	4302, HDGC	4305, HDGR
HOLMES CLASSIC	6202	6205
IDEAL CLASSIC	MFC68	SFR68, MFR68

SHEET: 1 OF 4

REVISIONS

REV. NO.	ZONE:	DATE:	ECN NO.	APPVD:	DESCRIPTION
02	–	7/2/13	–	SH	REMOVED IMPACT RESISTANT GLAZING.
03	–	12/6/13	–	SH	ADDED IMPACT RESISTANT GLAZING.
04	–	12/19/14	–	SH	ADDED GROOVED MODELS.
05	–	8/6/20	–	SH	UPDATED TITLE BLOCK AND REMOVED WIND CHART.
06	–	10/3/23	–	JDW	UPDATED IMPACT RESISTANT GLAZING DETAILS.

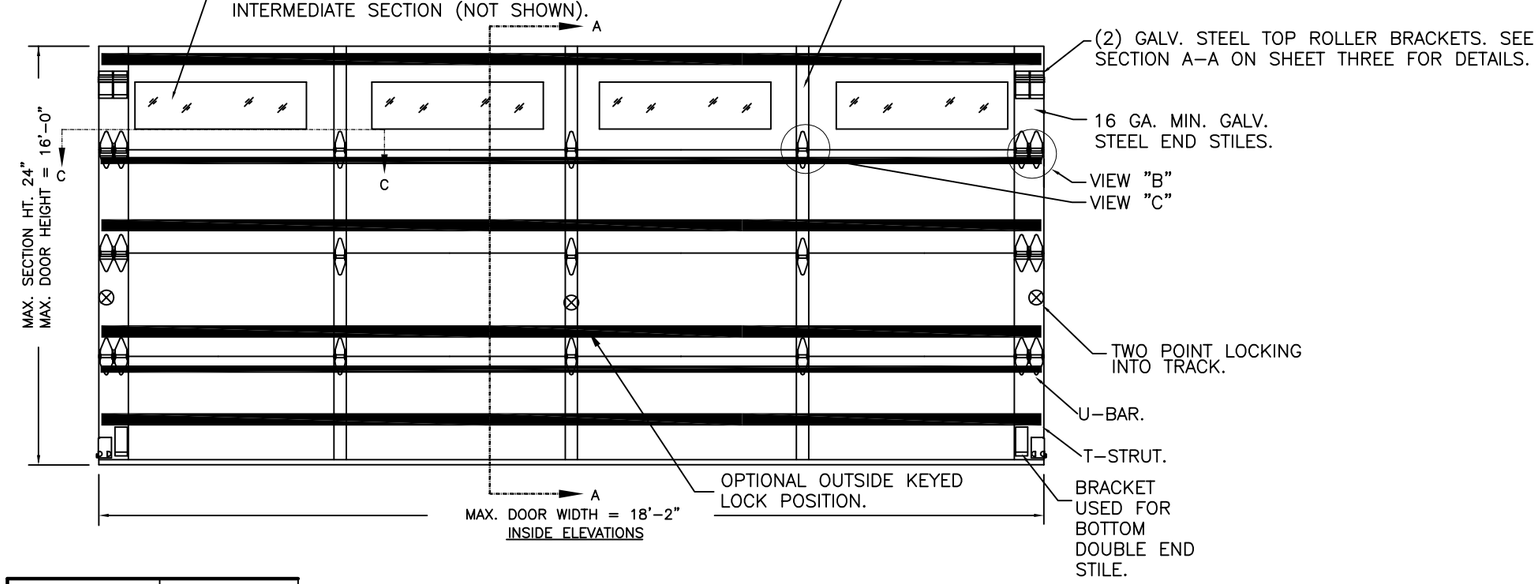

DOOR HEIGHT	# OF SECTIONS
UP TO 8'0"	4
8'3" TO 10'0"	5
10'3" TO 12'0"	6
12'3" TO 14'0"	7
14'3" TO 16'0"	8
MAX SECTION HEIGHT: 24"	

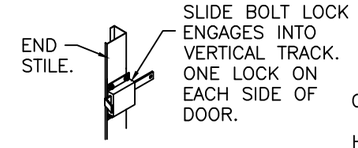

INSIDE SLIDE BOLT LOCK OPTION.

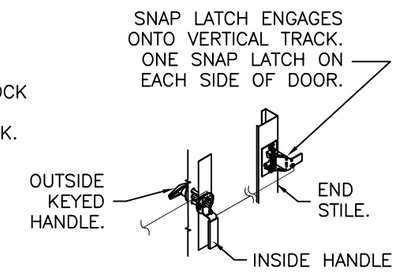

OUTSIDE KEYED LOCK WITH SNAP LATCH LOCK OPTION.

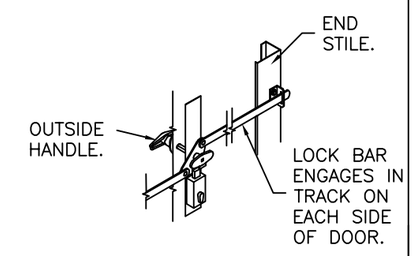

OUTSIDE KEYED LOCK WITH LOCK BAR LOCKING.

JAMES D. WHEELER
LICENSE
No. 91932
STATE OF
FLORIDA
PROFESSIONAL ENGINEER

Digitally signed by Jim Wheeler
Date: 2025.10.17 10:08:13 -04'00'

DESIGN ENGINEER:
JAMES D. WHEELER, P.E.
FLORIDA LICENSE No. 91932

DESIGN LOADS: +38.0 P.S.F. & –42.0 P.S.F.
TEST LOADS: +57.0 P.S.F. & –63.0 P.S.F.

Unless Stated Otherwise TOLERANCES are
.0 = ±.031
.00 = ±.015
.000 = ±.005
.0000 = ±.001
Degrees = ±1/2°
Unless Stated Otherwise DIMENSIONS ARE IN INCHES.

Clopay CORPORATION
8585 Duke Boulevard
Mason, OH 45040 USA
Tel. No. 513–770–4800
Fax No. 513–770–4853

MANUFACTURING PRODUCT CODE: DSIE-1F471
PART NO.: N/A
WINDLOAD RATING: W6 DP38T
DESCRIPTION: 2" GALLERY EPS DOORS 18'2"W (SEE TABLE)
DRAWN BY: SH | DATE: 1/10/13 | SCALE: NTS | DWG. SIZE: B
CHECKED BY: SH | DATE: 1/10/13 | SHEET 1 OF 4
DWG. NO.: 104810–A/B | VER: IBC

FLORIDA PRODUCT APPROVAL 16546

MODELS	SHORT	LONG
CLOPAY GALLERY	GD2SP, GR2SP	GD2LP, GR2LP
HOLMES ARTISTRY	AR2SP	AR2LP
IDEAL EXPRESSIONS	ED2SP	ED2LP

MODELS	FLUSH	GROOVED
CLOPAY CLASSIC	4302, HDGC	4305, HDGR
HOLMES CLASSIC	6202	6205
IDEAL CLASSIC	MFC68	SFR68, MFR68

REVISIONS					
REV. NO.	ZONE:	DATE:	ECN NO.	APPVD:	DESCRIPTION
06	–	–	–	–	SEE REVISION HISTORY ON SHEET ONE.

IMPACT–RESISTANT CONSTRUCTION:
SOLID DOORS (NO GLAZING) OR DOORS WITH OPTIONAL IMPACT–RESISTANT GLAZING ARE IMPACT–RESISTANT. OPTIONAL IMPACT RESISTANT ASSEMBLY CONSISTS OF ALUMINUM FRONT FRAME GE LEXAN MR10, AN APPROVED CC1 PLASTIC IN ACCORDANCE WITH IBC/FBC 2606 AND AN APPROVED C1 PLASTIC IN ACCORDANCE WITH FBC 2612.
THE ENTIRE DOOR ASSEMBLY INSTALLED IN COMPLIANCE WITH THIS SECTION MEETS THE WIND LOAD REQUIREMENTS OF THE FLORIDA BUILDING CODE AND INTERNATIONAL BUILDING CODE AND IS LARGE– AND SMALL–MISSILE IMPACT RESISTANT.

SECTION B–B (IMPACT–RESISTANT GLAZING OPTION)

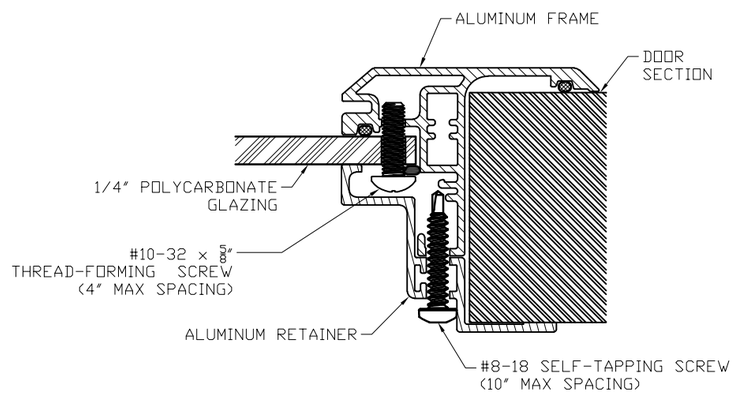

IMPACT–RESISTANT ASSEMBLY DETAILS
DRAWING 104810-A

DESIGN LOADS: +38.0 P.S.F. & –42.0 P.S.F.
TEST LOADS: +57.0 P.S.F. & –63.0 P.S.F.

Unless Stated Otherwise TOLERANCES are
.0 = ±.031
.00 = ±.015
.000 = ±.005
.0000 = ±.001
Degrees = ±1/2°
Unless Stated Otherwise DIMENSIONS ARE IN INCHES.

Clopay CORPORATION
8585 Duke Boulevard
Mason, OH 45040 USA
Tel. No. 513–770–4800
Fax No. 513–770–4853

MANUFACTURING PRODUCT CODE: DSIE-1F471
PART NO.: N/A
WINDLOAD RATING: W6 DP38T
DESCRIPTION: 2" GALLERY EPS DOORS 18'2"W (SEE TABLE)

DRAWN BY: SH	DATE: 1/10/13	SCALE: NTS	DWG. SIZE B
CHECKED BY: SH	DATE: 1/10/13	SHEET 2 OF 4	
DWG. NO.: 104810–A/B		VER: IBC	

DESIGN ENGINEER:
JAMES D. WHEELER, P.E.
FLORIDA LICENSE No. 91932

FLORIDA PRODUCT APPROVAL 16546

MODELS	SHORT	LONG
CLOPAY GALLERY	GD2SP, GR2SP	GD2LP, GR2LP
HOLMES ARTISTRY	AR2SP	AR2LP
IDEAL EXPRESSIONS	ED2SP	ED2LP

MODELS	FLUSH	GROOVED
CLOPAY CLASSIC	4302, HDGC	4305, HDGR
HOLMES CLASSIC	6202	6205
IDEAL CLASSIC	MFC68	SFR68, MFR68

REVISIONS

REV. NO.	ZONE:	DATE:	ECN NO.	APPVD:	DESCRIPTION
06	–	–	–	–	SEE REVISION HISTORY ON SHEET ONE.

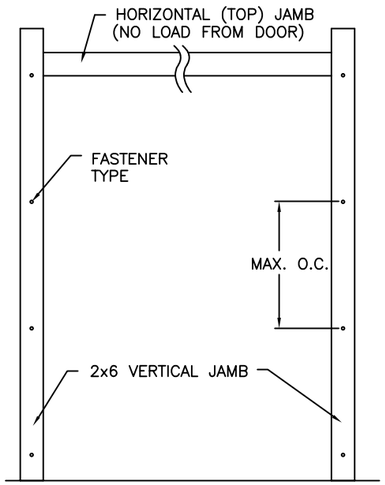

JAMB TO SUPPORTING STRUCTURE ATTACHMENT

NOTES:
1. ALL THE LOAD FROM THE DOOR IS TRANSFERRED TO THE TRACK AND THEN FROM THE TRACK TO THE 2x6 VERTICAL SYP (GRADE #2 OR BETTER) JAMBS. NO LOAD FROM THE DOOR IS TRANSFERRED TO THE HORIZONTAL (TOP) JAMB.
2. EACH VERTICAL JAMB SEES A MAXIMUM DESIGN LOAD OF +304 LB & −336 LB. PER LINEAR FOOT OF JAMB.
3. ALL JAMB FASTENERS MAY BE (BUT ARE NOT REQUIRED TO BE) COUNTERSUNK TO PROVIDE A FLUSH MOUNTING SURFACE.
4. A 1/3 STRESS INCREASE FOR WIND LOAD WAS NOT USED IN THE CALCULATION OF ALLOWABLE LOADS FOR ANCHORS AND FASTENERS FOR STEEL, CONCRETE AND MASONRY.

PREPARATION OF JAMBS BY OTHERS

NOTE: THE DESIGN OF THE SUPPORTING STRUCTURAL ELEMENTS SHALL BE THE RESPONSIBILITY OF THE PROFESSIONAL OF RECORD FOR THE BUILDING OR STRUCTURE AND IN ACCORDANCE WITH CURRENT BUILDING CODES FOR THE LOADS LISTED ON THIS DRAWING.

2x6 JAMB TO SUPPORTING STRUCTURE ATTACHMENT

(NOT TO BE USED FOR ATTACHMENT OF TRACK ANGLE TO 2x6 VERTICAL JAMBS OR SUPPORTING STRUCTURE)

BUILDING TYPE	FASTENER TYPE	MAXIMUM ON-CENTER DISTANCE BETWEEN FASTENERS*	STEEL WASHERS REQUIRED?
BLOCK WALL	1/4" x 1-1/2" MIN. EMBED TAPCON CONCRETE ANCHOR	5"	1" O.D.
3000 PSI MIN. CONCRETE	1/4" x 1-1/2" MIN. EMBED TAPCON CONCRETE ANCHOR	13"	1" O.D.
2000 PSI MIN. CONCRETE	3/8" X 1-1/2" MIN. EMBED SIMPSON STRONG-TIE SLEEVE ANCHOR	11"	INCLUDED
WOOD FRAME (SYP 0.55 SG)	1/2" x 3" LAG SCREW (ASTM A307, GRADE A) 1-1/2" EMBED INTO STRUCTURE	19"	1" O.D.

* FIRST (BOTTOM) ANCHOR STARTING AT NO MORE THAN HALF OF THE MAXIMUM ON-CENTER DISTANCE. HIGHEST ANCHOR INSTALLED AT LEAST AS HIGH AS THE DOOR OPENING.
CLOPAY DOES NOT SUPPLY JAMB ATTACHMENT FASTENERS.
MINIMUM DISTANCE BETWEEN CENTER OF ANCHOR AND EDGE OF CONCRETE BLOCK: 2-1/2"", EXCLUDING STUCCO THICKNESS.

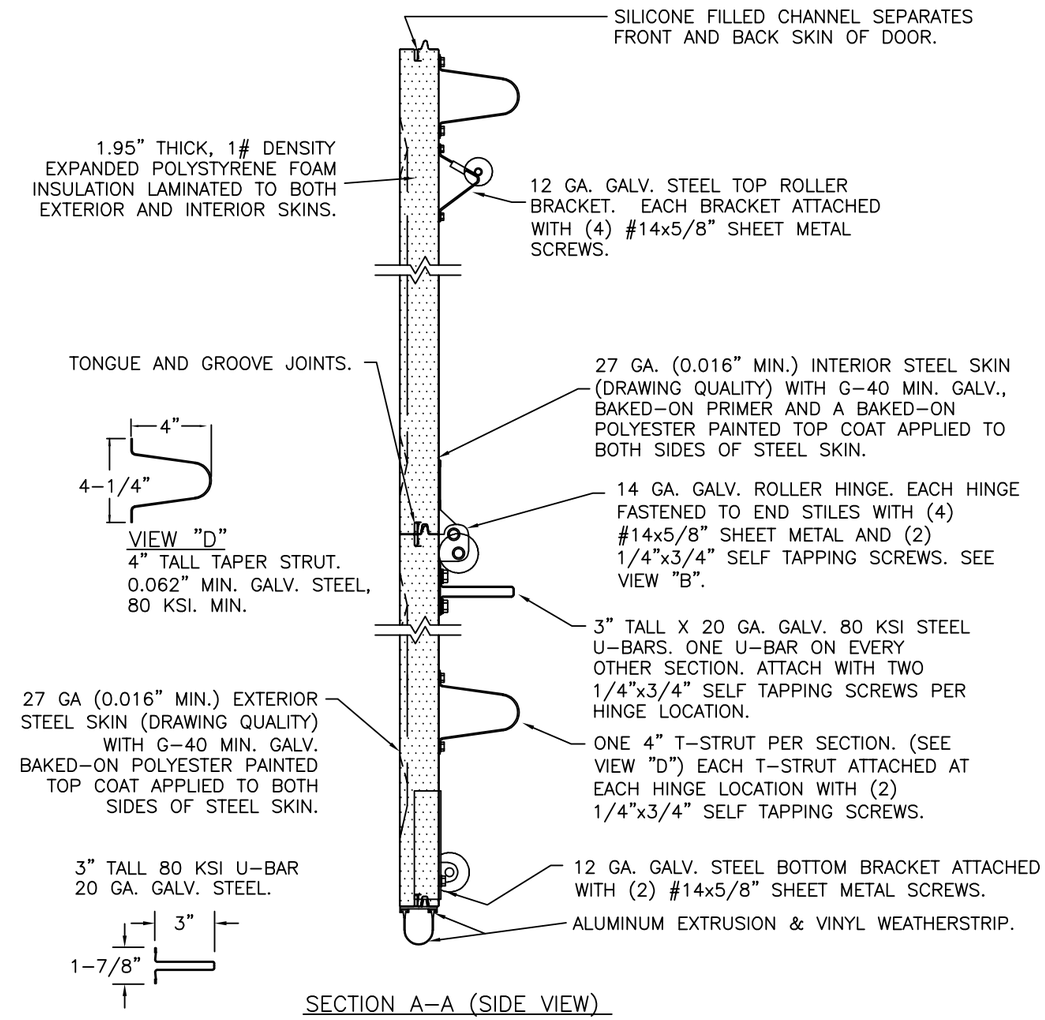

SECTION A-A (SIDE VIEW)

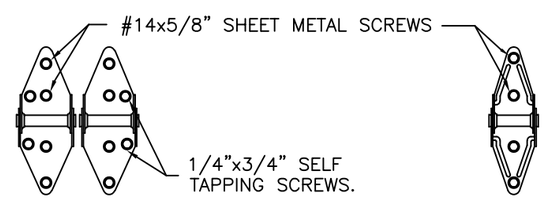

14 GA. END HINGES
VIEW "B"

18 GA. (MIN.) INTERMEDIATE HINGE
VIEW "C"

DESIGN LOADS: +38.0 P.S.F. & −42.0 P.S.F.
TEST LOADS: +57.0 P.S.F. & −63.0 P.S.F.

Unless Stated Otherwise TOLERANCES are
.0 = ±.031
.00 = ±.015
.000 = ±.005
.0000 = ±.001
Degrees = ±1/2°
Unless Stated Otherwise DIMENSIONS ARE IN INCHES.

Clopay CORPORATION
8585 Duke Boulevard
Mason, OH 45040 USA
Tel. No. 513-770-4800
Fax No. 513-770-4853

MANUFACTURING PRODUCT CODE: DSIE-1F471
PART NO.: N/A
WINDLOAD RATING: W6 DP38T
DESCRIPTION: 2" GALLERY EPS DOORS 18'2"W (SEE TABLE)

DRAWN BY: SH	DATE: 1/10/13	SCALE: NTS	DWG. SIZE B
CHECKED BY: SH	DATE: 1/10/13	SHEET 3 OF 4	
DWG. NO.: 104810-A/B		VER: IBC	

DESIGN ENGINEER:
JAMES D. WHEELER, P.E.
FLORIDA LICENSE No. 91932

FLORIDA PRODUCT APPROVAL 16546

MODELS	SHORT	LONG
CLOPAY GALLERY	GD2SP, GR2SP	GD2LP, GR2LP
HOLMES ARTISTRY	AR2SP	AR2LP
IDEAL EXPRESSIONS	ED2SP	ED2LP

MODELS	FLUSH	GROOVED
CLOPAY CLASSIC	4302, HDGC	4305, HDGR
HOLMES CLASSIC	6202	6205
IDEAL CLASSIC	MFC68	SFR68, MFR68

SHEET: 4 OF 4

REVISIONS					
REV. NO.	ZONE:	DATE:	ECN NO.	APPVD:	DESCRIPTION
06	–	–	–	–	SEE REVISION HISTORY ON SHEET ONE.

2" TRACK CONFIGURATION.

NOTE: TRACK CONFIGURATION ABOVE THE DOOR OPENING DOES NOT AFFECT THE WIND LOAD RATING OF THIS DOOR.

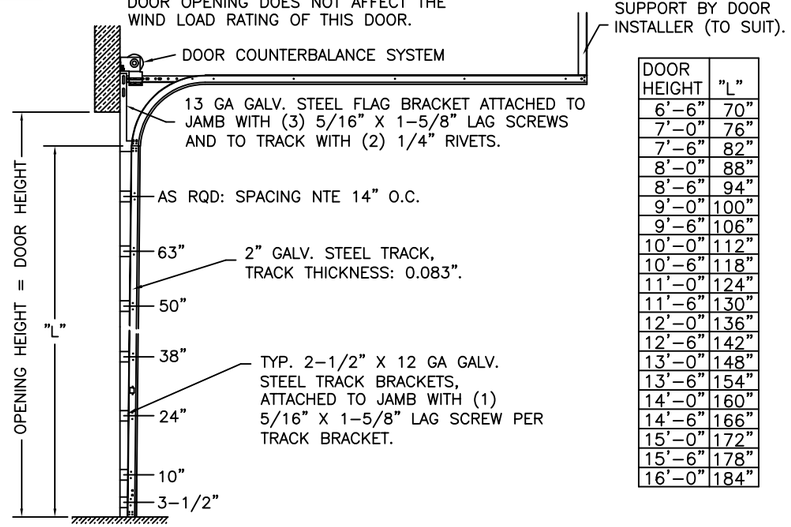

DOOR HEIGHT	"L"
6'-6"	70"
7'-0"	76"
7'-6"	82"
8'-0"	88"
8'-6"	94"
9'-0"	100"
9'-6"	106"
10'-0"	112"
10'-6"	118"
11'-0"	124"
11'-6"	130"
12'-0"	136"
12'-6"	142"
13'-0"	148"
13'-6"	154"
14'-0"	160"
14'-6"	166"
15'-0"	172"
15'-6"	178"
16'-0"	184"

JAMB CONFIGURATION FOR 2" TRACK.

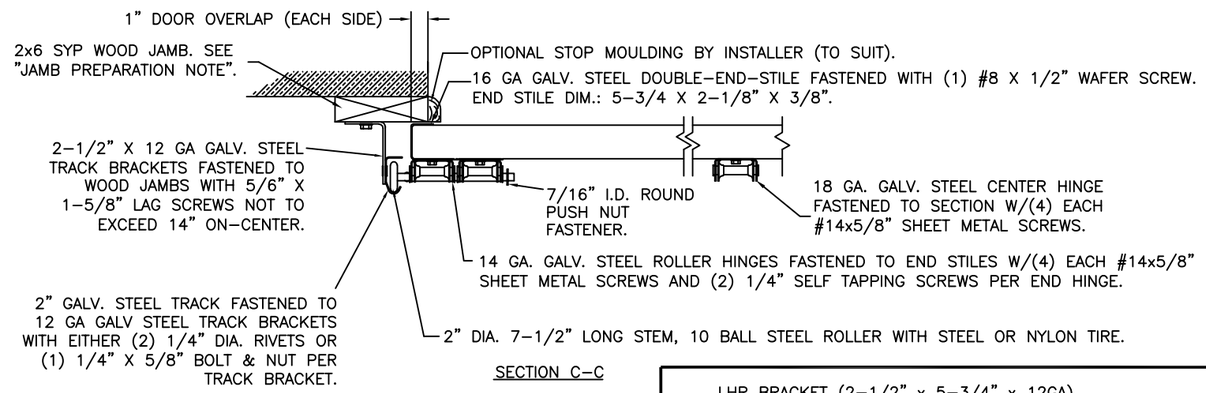

SECTION C-C

PREPARATION OF JAMBS BY OTHERS.

LHR BRACKET (2-1/2" x 5-3/4" x 12GA) ATTACHED WITH (2) 1/4" x 3/4" SELF TAPPING SCREWS. NOTE THAT LHR BRACKETS ARE ALSO USED WITH "DOUBLE END STILE" AS SHOWN IN ZONE B-3 SHEET 1.

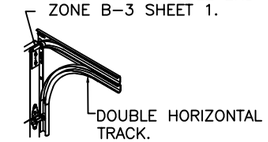

DOUBLE TRACK
LOW HEADROOM OPTION
(AVAIL. FOR BOTH 2" AND 3" TRACK)

3" TRACK CONFIGURATION.

NOTE: TRACK CONFIGURATION ABOVE THE DOOR OPENING DOES NOT AFFECT THE WIND LOAD RATING OF THIS DOOR.

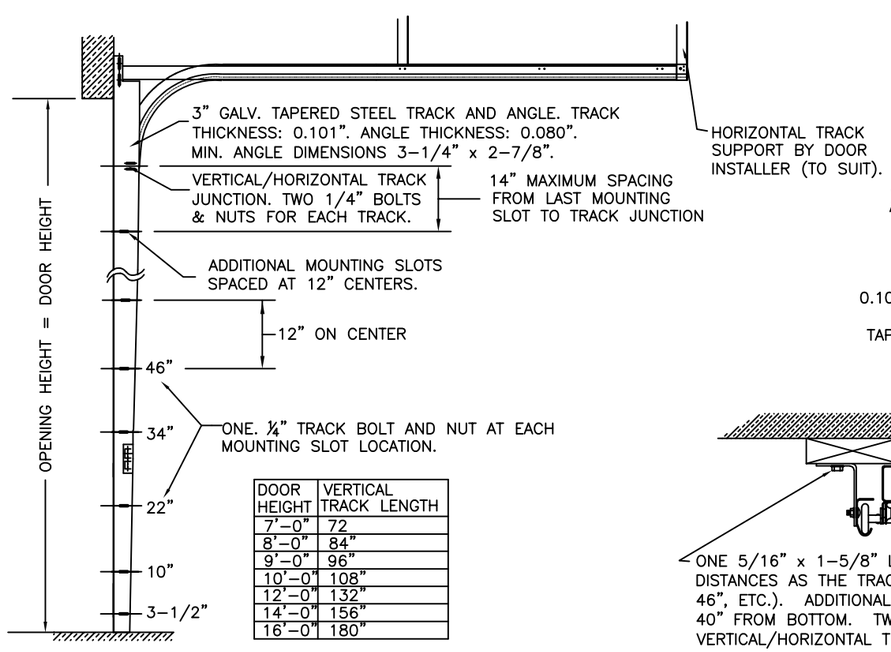

DOOR HEIGHT	VERTICAL TRACK LENGTH
7'-0"	72
8'-0"	84"
9'-0"	96"
10'-0"	108"
12'-0"	132"
14'-0"	156"
16'-0"	180"

JAMB CONFIGURATION FOR 3" TRACK.

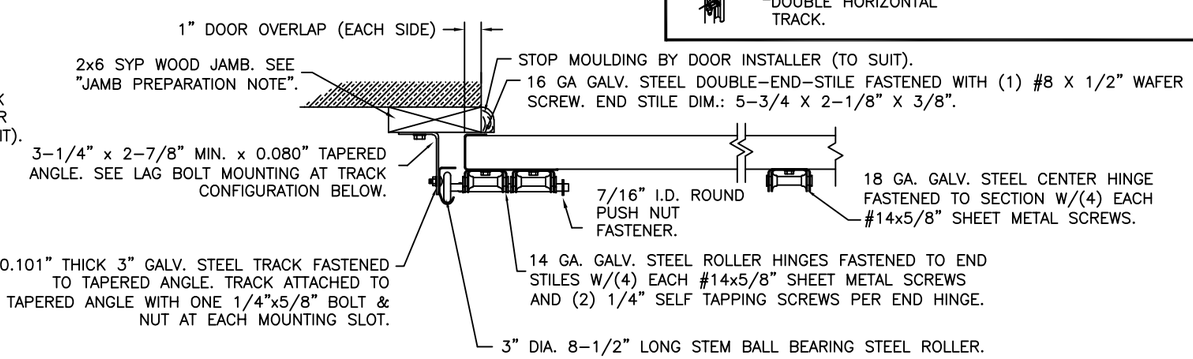

SECTION C-C

PREPARATION OF JAMBS BY OTHERS.

DESIGN LOADS: +38.0 P.S.F. & -42.0 P.S.F.
TEST LOADS: +57.0 P.S.F. & -63.0 P.S.F.

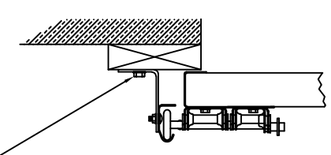

ONE 5/16" x 1-5/8" LAG SCREW SPACED AT THE SAME DISTANCES AS THE TRACK BOLTS (I.E. 3-1/2", 10", 22", 34", 46", ETC.). ADDITIONAL LAG SCREWS LOCATED AT 16", 28", & 40" FROM BOTTOM. TWO LAG SCREWS ALSO LOCATED ABOVE VERTICAL/HORIZONTAL TRACK JUNCTION.

DESIGN ENGINEER:
JAMES D. WHEELER, P.E.
FLORIDA LICENSE No. 91932

Unless Stated Otherwise TOLERANCES are
.0 = ±.031
.00 = ±.015
.000 = ±.005
.0000 = ±.001
Degrees = ±1/2°
Unless Stated Otherwise DIMENSIONS ARE IN INCHES.

Clopay CORPORATION
8585 Duke Boulevard
Mason, OH 45040 USA
Tel. No. 513-770-4800
Fax No. 513-770-4853

MANUFACTURING PRODUCT CODE: DSIE-1F471
PART NO.: N/A
WINDLOAD RATING: W6 DP38T
DESCRIPTION: 2" GALLERY EPS DOORS 18'2"W (SEE TABLE)
DRAWN BY: SH | DATE: 1/10/13 | SCALE: NTS | DWG. SIZE B
CHECKED BY: SH | DATE: 1/10/13 | SHEET 4 OF 4
DWG. NO.: 104810-A/B | VER: IBC

FLORIDA PRODUCT APPROVAL 16546