MODELS	SHORT	LONG
CLOPAY GALLERY	GD2SU, GR2SU	GD2LU, GR2LU
HOLMES ARTISTRY	AR2SU	AR2LU
IDEAL EXPRESSIONS	ED2SU	ED2LU

MODELS	FLUSH	RIBBED
CLOPAY CLASSIC	9202, HDPC20	9205, HDPR20
HOLMES CLASSIC	7202	7205
IDEAL CLASSIC	8202, MFC68U	MFR68U

SHEET: 1 OF 4

REVISIONS

REV. NO.	ZONE:	DATE:	ECN NO.	APPVD:	DESCRIPTION
07	–	10/6/25	–	DH	REVISED IMPACT RESISTANT GLAZING DETAILS

MODELS	NARROW	WIDE	CROSSBUCK INSERTS
CLOPAY BRIDGEPORT	BD2NU, BR2NU	BD2EU, BR2EU	BD2CU, BR2CU
HOLMES WESTPORT	PR2NU	PR2EU	PR2CU

DOOR HEIGHT	# OF SECTIONS	# OF U-BARS
UP TO 6'0"	3	4
6'3" TO 8'0"	4	5
8'3" TO 10'0""	5	6
10'3" TO 12'0"	6	7
12'3" TO 14'0"	7	8
14'3" TO 16'0"	8	9
MAX SECTION HEIGHT: 24"		

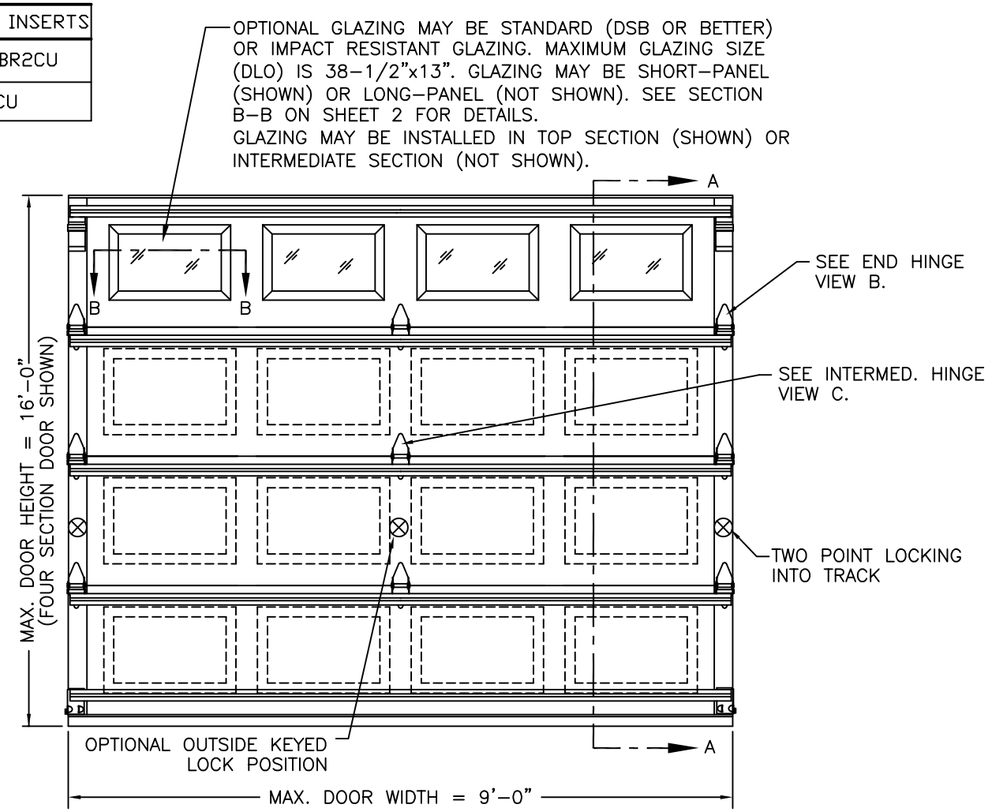

SHORT PANEL SHOWN

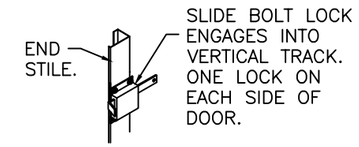

INSIDE SLIDE BOLT LOCK OPTION.

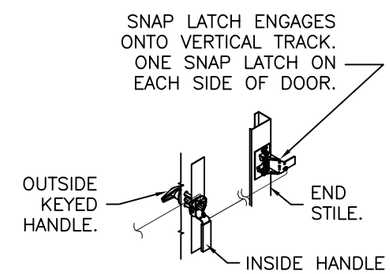

OUTSIDE KEYED LOCK WITH SNAP LATCH LOCK OPTION.

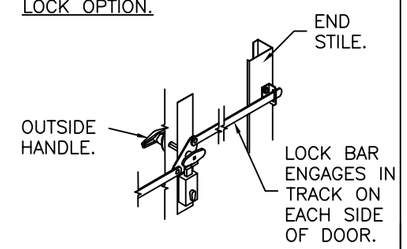

OUTSIDE KEYED LOCK WITH LOCK BAR LOCKING.

JAMES D. WHEELER
LICENSE
No. 91932
STATE OF
FLORIDA
PROFESSIONAL ENGINEER

Digitally signed by Jim Wheeler
Date: 2025.12.15 11:17:08 -05'00'

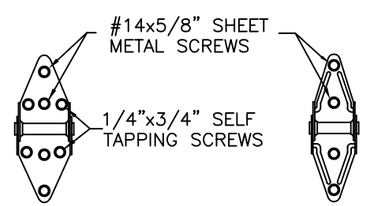

14 GA. END HINGES VIEW "B"

18 GA. INTERMEDIATE HINGE VIEW "C"

DESIGN LOADS: +38.0 P.S.F. & –44.0 P.S.F.
TEST LOADS: +57.0 P.S.F. & –66.0 P.S.F.

Unless Stated Otherwise TOLERANCES are
.0 = ±.031
.00 = ±.015
.000 = ±.005
.0000 = ±.001
Degrees = ±1/2°
Unless Stated Otherwise DIMENSIONS ARE IN INCHES.

Clopay CORPORATION
8585 Duke Boulevard
Mason, OH 45040 USA
Tel. No. 513–770–4800
Fax No. 513–770–4853

MANUFACTURING PRODUCT CODE: DSIU-1F471

PART NO.: N/A

WINDLOAD RATING: W6 DP38

DESCRIPTION: GALLERY 2" PUR SINGLE CAR +38/–44 PSF

DRAWN BY: MW	DATE: 9/7/95	SCALE: NTS	DWG. SIZE B
CHECKED BY: --	DATE: --	SHEET 1 OF 4	
DWG. NO.: 104432 – A/B		VER: IBC	

DESIGN ENGINEER:
JAMES D WHEELER, P.E.
FLORIDA LICENSE No. 91932

FLORIDA PRODUCT APPROVAL 16546

MODELS	SHORT	LONG
CLOPAY GALLERY	GD2SU, GR2SU	GD2LU, GR2LU
HOLMES ARTISTRY	AR2SU	AR2LU
IDEAL EXPRESSIONS	ED2SU	ED2LU

MODELS	FLUSH	RIBBED
CLOPAY CLASSIC	9202, HDPC20	9205, HDPR20
HOLMES CLASSIC	7202	7205
IDEAL CLASSIC	8202, MFC68U	MFR68U

SHEET: 2 OF 4

REVISIONS					
REV. NO.	ZONE:	DATE:	ECN NO.	APPVD:	DESCRIPTION
07	–	–	–	–	SEE REVISION HISTORY ON SHEET ONE.

MODELS	NARROW	WIDE	CROSSBUCK INSERTS
CLOPAY BRIDGEPORT	BD2NU, BR2NU	BD2EU, BR2EU	BD2CU, BR2CU
HOLMES WESTPORT	PR2NU	PR2EU	PR2CU

STANDARD ASSEMBLY CONSTRUCTION:
OPTIONAL DSB OR 1/8" ACYRLIC LITES AVAILABLE. OPTIONAL ACRYLIC GLAZING IS PLASKOLITE OPTIX OR LUCITE CP APPROVED CC2 PLASTIC IN ACCORDANCE WITH IBC/FBC 2606.
THE ENTIRE DOOR ASSEMBLY INSTALLED IN COMPLIANCE WITH THIS SECTION MEETS THE WIND LOAD REQUIREMENTS OF THE FLORIDA BUILDING CODE OR INTERNATIONAL BUILDING CODE BUT DOES NOT MEET THE IMPACT RESISTANT REQUIREMENT FOR WINDBORNE DEBRIS REGIONS (REF. CHAPTER 16 FBC/IBC).

SECTION B–B (NON–IMPACT RESISTANT GLAZING OPTION)

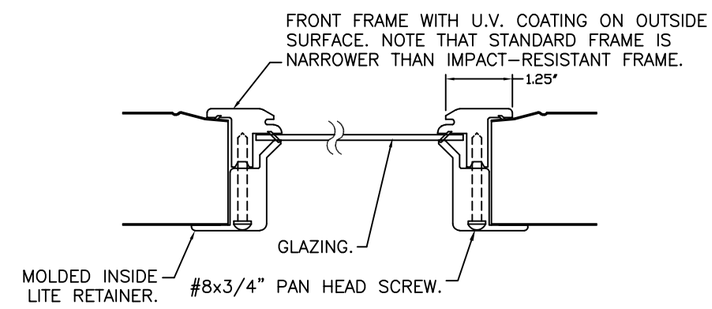

STANDARD ASSEMBLY DETAILS
DRAWING 104432-B

DESIGN LOADS: +38.0 P.S.F. & –44.0 P.S.F.
TEST LOADS: +57.0 P.S.F. & –66.0 P.S.F.

MANUFACTURING PRODUCT CODE: DSIU-1F471
PART NO.: N/A

Unless Stated Otherwise TOLERANCES are
.0 = ±.031
.00 = ±.015
.000 = ±.005
.0000 = ±.001
Degrees = ±1/2°
Unless Stated Otherwise DIMENSIONS ARE IN INCHES.

Clopay CORPORATION
8585 Duke Boulevard
Mason, OH 45040 USA
Tel. No. 513–770–4800
Fax No. 513–770–4853

WINDLOAD RATING: W6 DP38

DESCRIPTION: GALLERY 2" PUR SINGLE CAR +38/–44 PSF			
DRAWN BY: MW	DATE: 9/7/95	SCALE: NTS	DWG. SIZE B
CHECKED BY: --	DATE: --	SHEET 2 OF 4	
DWG. NO.: 104432 – A/B		VER: IBC	

DESIGN ENGINEER:
JAMES D WHEELER, P.E.
FLORIDA LICENSE No. 91932

FLORIDA PRODUCT APPROVAL 16546

MODELS	SHORT	LONG
CLOPAY GALLERY	GD2SU, GR2SU	GD2LU, GR2LU
HOLMES ARTISTRY	AR2SU	AR2LU
IDEAL EXPRESSIONS	ED2SU	ED2LU

MODELS	FLUSH	RIBBED
CLOPAY CLASSIC	9202, HDPC20	9205, HDPR20
HOLMES CLASSIC	7202	7205
IDEAL CLASSIC	8202, MFC68U	MFR68U

MODELS	NARROW	WIDE	CROSSBUCK INSERTS
CLOPAY BRIDGEPORT	BD2NU, BR2NU	BD2EU, BR2EU	BD2CU, BR2CU
HOLMES WESTPORT	PR2NU	PR2EU	PR2CU

SHEET: 3 OF 4

REVISIONS					
REV. NO.	ZONE:	DATE:	ECN NO.	APPVD:	DESCRIPTION
07	–	–	–	–	SEE REVISION HISTORY ON SHEET ONE.

VERTICAL JAMB ATTACHMENT (WOOD FRAME BUILDINGS):
3/8"x3" LAG SCREWS ON 24" CENTERS. 1–1/8" O.D. WASHER REQUIRED. LAG SCREWS MAY BE COUNTERSUNK (BUT NOT REQUIRED) TO PROVIDE A FLUSH MOUNTING SURFACE. HORIZONTAL JAMBS DO NOT TRANSFER LOAD.

VERTICAL JAMB ATTACHMENT (C–90 BLOCK OR 2,000 PSI MIN. CONCRETE COLUMN):
3/8"x3" SLEEVE ANCHOR BOLTS ON 22" CENTERS (2,000 PSI MIN. CONCRETE). WASHERS INCLUDED WITH SLEEVE ANCHORS.
OR
1/4"x3" TAPCON SCREWS ON 19" CENTERS (2,000 PSI MIN. CONCRETE) OR 10" CENTERS (C–90 BLOCK). 1" O.D. WASHERS REQUIRED WITH TAPCONS.
ANCHORS MAY BE COUNTERSUNK (BUT NOT REQUIRED) TO PROVIDE A FLUSH MOUNTING SURFACE. HORIZONTAL JAMBS DO NOT TRANSFER LOAD.

OTHER JAMB CONFIGURATIONS: REFER TO DASMA TDS–161. A LICENSED DESIGN PROFESSIONAL MAY ALSO BE EMPLOYED TO APPROVE ALTERNATE FASTENERS AND/OR JAMB CONFIGURATIONS.

PREPARATION OF JAMBS BY OTHERS

NOTE: THE DESIGN OF THE SUPPORTING STRUCTURAL ELEMENTS SHALL BE THE RESPONSIBILITY OF THE PROFESSIONAL OF RECORD FOR THE BUILDING OR STRUCTURE AND IN ACCORDANCE WITH CURRENT BUILDING CODES FOR THE LOADS LISTED ON THIS DRAWING.

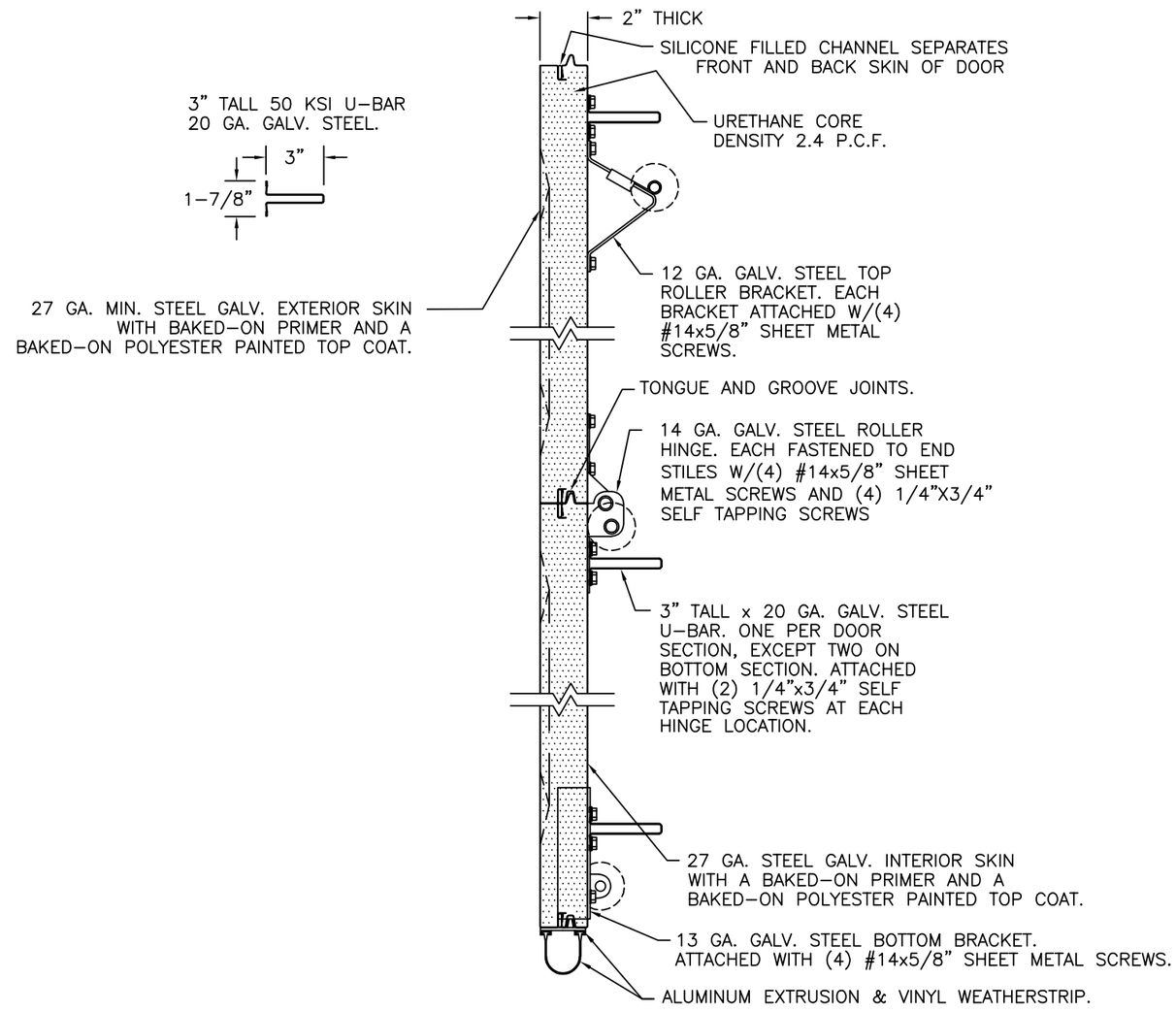

SECTION A–A (SIDE VIEW)

DESIGN LOADS: +38.0 P.S.F. & –44.0 P.S.F.
TEST LOADS: +57.0 P.S.F. & –66.0 P.S.F.

Unless Stated Otherwise TOLERANCES are
.0 = ±.031
.00 = ±.015
.000 = ±.005
.0000 = ±.001
Degrees = ±1/2°
Unless Stated Otherwise DIMENSIONS ARE IN INCHES.

Clopay CORPORATION
8585 Duke Boulevard
Mason, OH 45040 USA
Tel. No. 513–770–4800
Fax No. 513–770–4853

MANUFACTURING PRODUCT CODE: DSIU–1F471
PART NO.: N/A
WINDLOAD RATING: W6 DP38

DESCRIPTION: GALLERY 2" PUR SINGLE CAR +38/–44 PSF

DRAWN BY: MW	DATE: 9/7/95	SCALE: NTS	DWG. SIZE B
CHECKED BY: --	DATE: --	SHEET 3 OF 4	
DWG. NO.: 104432 – A/B		VER: IBC	

DESIGN ENGINEER:
JAMES D WHEELER, P.E.
FLORIDA LICENSE No. 91932

FLORIDA PRODUCT APPROVAL 16546

MODELS	SHORT	LONG
CLOPAY GALLERY	GD2SU, GR2SU	GD2LU, GR2LU
HOLMES ARTISTRY	AR2SU	AR2LU
IDEAL EXPRESSIONS	ED2SU	ED2LU

MODELS	FLUSH	RIBBED
CLOPAY CLASSIC	9202, HDPC20	9205, HDPR20
HOLMES CLASSIC	7202	7205
IDEAL CLASSIC	8202, MFC68U	MFR68U

SHEET: 4 OF 4

REVISIONS					
REV. NO.	ZONE:	DATE:	ECN NO.	APPVD:	DESCRIPTION
07	–	–	–	–	SEE REVISION HISTORY ON SHEET ONE.

MODELS	NARROW	WIDE	CROSSBUCK INSERTS
CLOPAY BRIDGEPORT	BD2NU, BR2NU	BD2EU, BR2EU	BD2CU, BR2CU
HOLMES WESTPORT	PR2NU	PR2EU	PR2CU

2" TRACK CONFIGURATION.

NOTE: TRACK CONFIGURATION ABOVE THE DOOR OPENING DOES NOT AFFECT THE WIND LOAD RATING OF THIS DOOR.

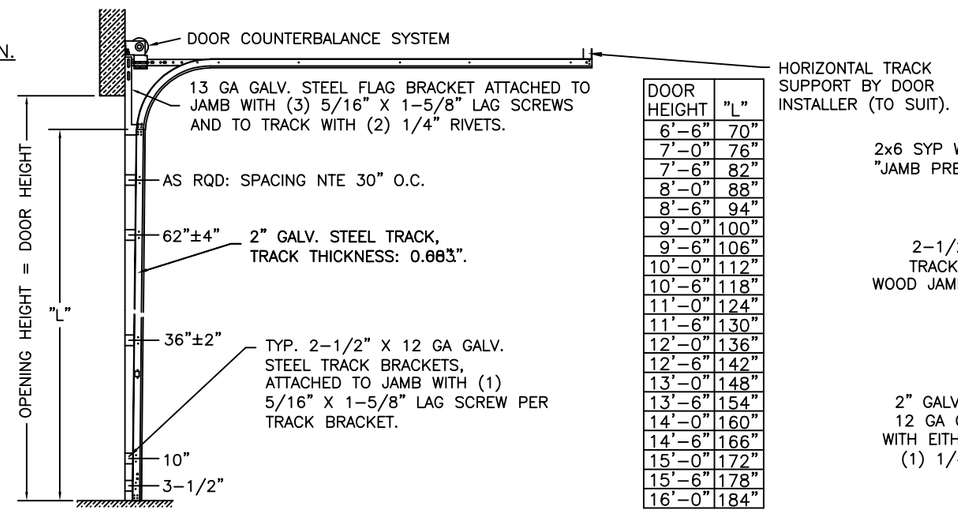

DOOR HEIGHT	"L"
6'-6"	70"
7'-0"	76"
7'-6"	82"
8'-0"	88"
8'-6"	94"
9'-0"	100"
9'-6"	106"
10'-0"	112"
10'-6"	118"
11'-0"	124"
11'-6"	130"
12'-0"	136"
12'-6"	142"
13'-0"	148"
13'-6"	154"
14'-0"	160"
14'-6"	166"
15'-0"	172"
15'-6"	178"
16'-0"	184"

JAMB CONFIGURATION.

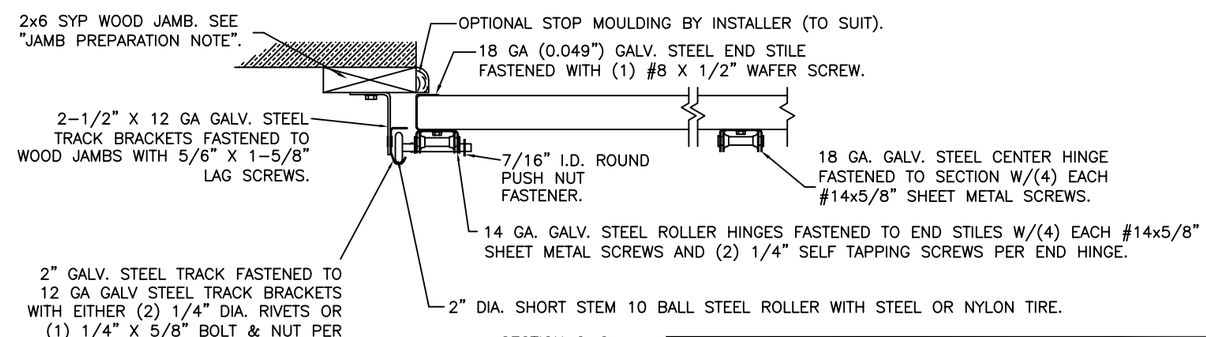

SECTION C–C

PREPARATION OF JAMBS BY OTHERS.

LHR BRACKET (2-1/2" x 5-3/4" x 12GA) ATTACHED WITH (2) 1/4" x 3/4" SELF TAPPING SCREWS.

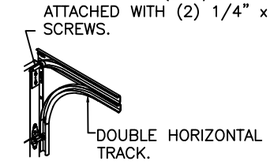

DOUBLE TRACK
LOW HEADROOM OPTION
(AVAIL. FOR BOTH 2" AND 3" TRACK)

3" TRACK IS ALSO AVAILABLE.

DESIGN LOADS: +38.0 P.S.F. & –44.0 P.S.F.
TEST LOADS: +57.0 P.S.F. & –66.0 P.S.F.

Unless Stated Otherwise TOLERANCES are
.0 = ±.031
.00 = ±.015
.000 = ±.005
.0000 = ±.001
Degrees = ±1/2°
Unless Stated Otherwise DIMENSIONS ARE IN INCHES.

Clopay CORPORATION
8585 Duke Boulevard
Mason, OH 45040 USA
Tel. No. 513-770-4800
Fax No. 513-770-4853

MANUFACTURING PRODUCT CODE: DSIU-1F471

PART NO.: N/A

WINDLOAD RATING: W6 DP38

DESCRIPTION: GALLERY 2" PUR SINGLE CAR +38/–44 PSF

DRAWN BY: MW	DATE: 9/7/95	SCALE: NTS	DWG. SIZE B
CHECKED BY: --	DATE: --	SHEET 4 OF 4	
DWG. NO.: 104432 – A/B		VER: IBC	

DESIGN ENGINEER:
JAMES D WHEELER, P.E.
FLORIDA LICENSE No. 91932

FLORIDA PRODUCT APPROVAL 16546