MODELS	SHORT	LONG
CLOPAY GALLERY	GD2SU, GR2SU	GD2LU, GR2LU
HOLMES ARTISTRY	AR2SU	AR2LU
IDEAL EXPRESSIONS	ED2SU	ED2LU

MODELS	FLUSH	RIBBED
CLOPAY CLASSIC	9202, HDPC20	9205, HDPR20
HOLMES CLASSIC	7202	7205
IDEAL CLASSIC	8202, MFC68U	MFR68U

SHEET: 1 OF 4

REVISIONS					
REV. NO.	ZONE:	DATE:	ECN NO.	APPVD:	DESCRIPTION
06	–	8/6/20	–	SH	UPDATED TITLE BLOCK, REMOVED WIND CHART, ADDED BRIDGEPORT.

MODELS	NARROW	WIDE
CLOPAY BRIDGEPORT	BD2NU, BR2NU	BD2EU, BR2EU
HOLMES WESTPORT	PR2NU	PR2EU

DOOR HEIGHT	# OF SECTIONS	# OF U-BARS
UP TO 6'0"	3	4
6'3" TO 8'0"	4	5
8'3" TO 10'0"	5	6
10'3" TO 12'0"	6	7
12'3" TO 14'0"	7	8
14'3" TO 16'0"	8	9
MAX SECTION HEIGHT: 24"		

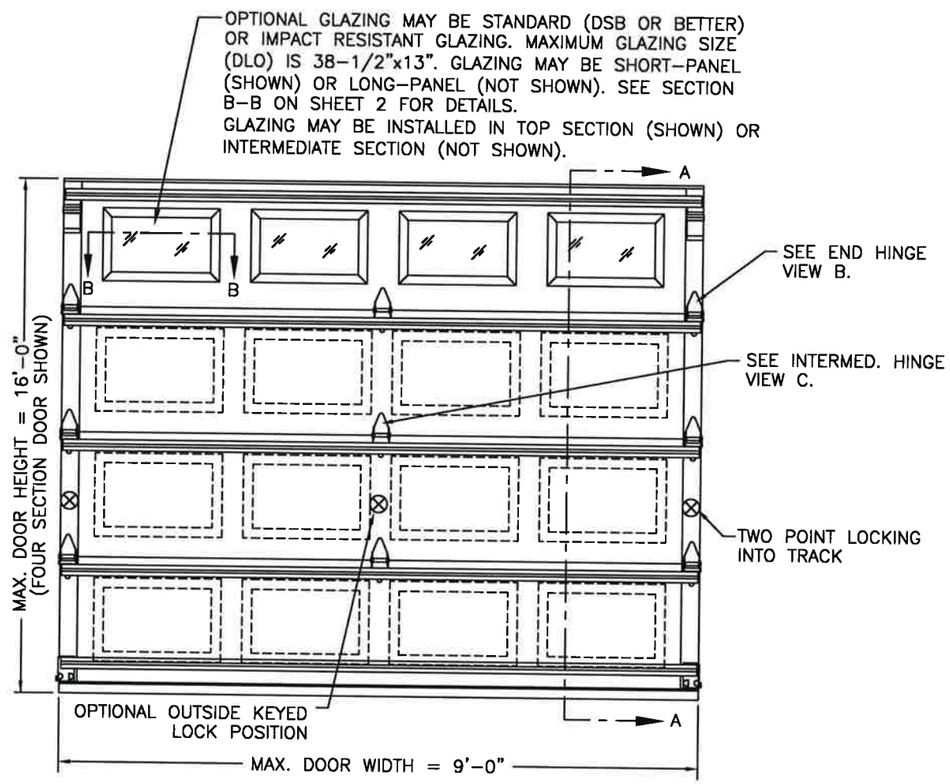

SHORT PANEL SHOWN

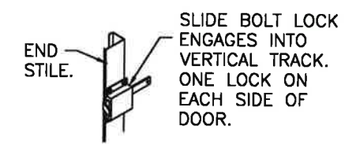

INSIDE SLIDE BOLT LOCK OPTION.

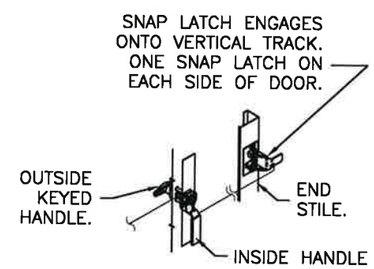

OUTSIDE KEYED LOCK WITH SNAP LATCH LOCK OPTION.

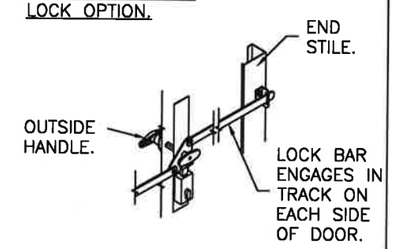

OUTSIDE KEYED LOCK WITH LOCK BAR LOCKING.

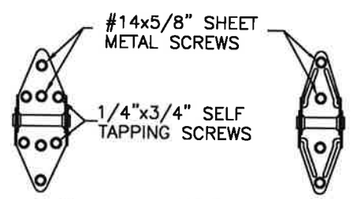

14 GA. END HINGES VIEW "B" — 18 GA. INTERMEDIATE HINGE VIEW "C"

SCOTT HAMILTON LICENSE No 63286 STATE OF FLORIDA PROFESSIONAL ENGINEER

8/6/20

DESIGN ENGINEER:
SCOTT HAMILTON, P.E.
FLORIDA LICENSE No. 63286

DESIGN LOADS: +38.0 P.S.F. & -44.0 P.S.F.
TEST LOADS: +57.0 P.S.F. & -66.0 P.S.F.

Unless Stated Otherwise TOLERANCES are
.0 = ±.031
.00 = ±.015
.000 = ±.005
.0000 = ±.001
Degrees = ±1/2°
Unless Stated Otherwise DIMENSIONS ARE IN INCHES.

Clopay CORPORATION
8585 Duke Boulevard
Mason, OH 45040 USA
Tel. No. 513-770-4800
Fax No. 513-770-4853

MANUFACTURING PRODUCT CODE DSIU-1F471			
PART NO.: N/A			
WINDLOAD RATING W6 DP38			
DESCRIPTION: GALLERY 2" PUR SINGLE CAR +38/-44 PSF			
DRAWN BY: MW	DATE: 9/7/95	SCALE: NTS	DWG. SIZE B
CHECKED BY: --	DATE: --	SHEET 1 OF 4	
DWG. NO.: 104432 - A/B		VER: IBC	

FLORIDA PRODUCT APPROVAL 16546

MODELS	SHORT	LONG
CLOPAY GALLERY	GD2SU, GR2SU	GD2LU, GR2LU
HOLMES ARTISTRY	AR2SU	AR2LU
IDEAL EXPRESSIONS	ED2SU	ED2LU

MODELS	FLUSH	RIBBED
CLOPAY CLASSIC	9202, HDPC20	9205, HDPR20
HOLMES CLASSIC	7202	7205
IDEAL CLASSIC	8202, MFC68U	MFR68U

SHEET: 2 OF 4

REVISIONS					
REV. NO.	ZONE:	DATE:	ECN NO.	APPVD:	DESCRIPTION
03	–	–	–	–	SEE REVISION HISTORY ON SHEET ONE.

MODELS	NARROW	WIDE
CLOPAY BRIDGEPORT	BD2NU, BR2NU	BD2EU, BR2EU
HOLMES WESTPORT	PR2NU	PR2EU

IMPACT–RESISTANT CONSTRUCTION:
SOLID DOORS (NO GLAZING) OR DOORS WITH OPTIONAL IMPACT–RESISTANT GLAZING ARE IMPACT–RESISTANT. OPTIONAL IMPACT RESISTANT ASSEMBLY CONSISTS OF ALUMINUM FRONT FRAME AND SABIC IP LEXAN 9034 (VERSIONS ALSO APPROVED: MR10, 9030, 90318, 90316, 90317, 90311, 90314, 90355) OR BAYER MAKROLON GP (VERSIONS ALSO APPROVED: SL, AR, 15), APPROVED CC1 PLASTICS IN ACCORDANCE WITH IBC/FBC 2606 AND AN APPROVED C1 PLASTIC IN ACCORDANCE WITH FBC 2612.
THE ENTIRE DOOR ASSEMBLY INSTALLED IN COMPLIANCE WITH THIS SECTION MEETS THE WIND LOAD REQUIREMENTS OF THE FLORIDA BUILDING CODE AND INTERNATIONAL BUILDING CODE AND IS LARGE– AND SMALL–MISSILE IMPACT RESISTANT.

SECTION B–B (IMPACT–RESISTANT GLAZING OPTION)

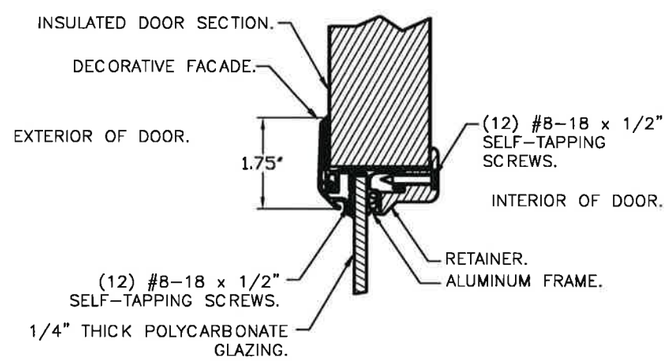

IMPACT–RESISTANT ASSEMBLY DETAILS
DRAWING 104432-A

STANDARD ASSEMBLY CONSTRUCTION:
OPTIONAL DSB OR 1/8" ACYRLIC LITES AVAILABLE. OPTIONAL ACRYLIC GLAZING IS PLASKOLITE OPTIX OR LUCITE CP APPROVED CC2 PLASTIC IN ACCORDANCE WITH IBC/FBC 2606.
THE ENTIRE DOOR ASSEMBLY INSTALLED IN COMPLIANCE WITH THIS SECTION MEETS THE WIND LOAD REQUIREMENTS OF THE FLORIDA BUILDING CODE OR INTERNATIONAL BUILDING CODE BUT DOES NOT MEET THE IMPACT RESISTANT REQUIREMENT FOR WINDBORNE DEBRIS REGIONS (REF. CHAPTER 16 FBC/IBC).

SECTION B–B (NON–IMPACT RESISTANT GLAZING OPTION)

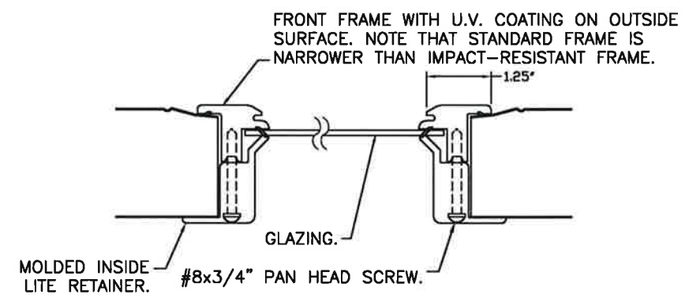

STANDARD ASSEMBLY DETAILS
DRAWING 104432-B

SCOTT HAMILTON LICENSE No 63286 STATE OF FLORIDA PROFESSIONAL ENGINEER

8/4/20

DESIGN ENGINEER:
SCOTT HAMILTON, P.E.
FLORIDA LICENSE No. 63286

DESIGN LOADS: +38.0 P.S.F. & –44.0 P.S.F.
TEST LOADS: +57.0 P.S.F. & –66.0 P.S.F.

Unless Stated Otherwise TOLERANCES are
.0 = ±.031
.00 = ±.015
.000 = ±.005
.0000 = ±.001
Degrees = ±1/2°
Unless Stated Otherwise DIMENSIONS ARE IN INCHES.

Clopay CORPORATION
8585 Duke Boulevard
Mason, OH 45040 USA
Tel. No. 513–770–4800
Fax No. 513–770–4853

MANUFACTURING PRODUCT CODE DSIU-1F471			
PART NO.: N/A			
WINDLOAD RATING W6 DP38			
DESCRIPTION: GALLERY 2" PUR SINGLE CAR +38/–44 PSF			
DRAWN BY: MW	DATE: 9/7/95	SCALE: NTS	DWG. SIZE B
CHECKED BY: --	DATE: --	SHEET 2 OF 4	
DWG. NO.: 104432 – A/B		VER: IBC	

FLORIDA PRODUCT APPROVAL 16546

MODELS	SHORT	LONG
CLOPAY GALLERY	GD2SU, GR2SU	GD2LU, GR2LU
HOLMES ARTISTRY	AR2SU	AR2LU
IDEAL EXPRESSIONS	ED2SU	ED2LU

MODELS	FLUSH	RIBBED
CLOPAY CLASSIC	9202, HDPC20	9205, HDPR20
HOLMES CLASSIC	7202	7205
IDEAL CLASSIC	8202, MFC68U	MFR68U

MODELS	NARROW	WIDE
CLOPAY BRIDGEPORT	BD2NU, BR2NU	BD2EU, BR2EU
HOLMES WESTPORT	PR2NU	PR2EU

SHEET: 3 OF 4

REVISIONS					
REV. NO.	ZONE:	DATE:	ECN NO.	APPVD:	DESCRIPTION
03	–	–	–	–	SEE REVISION HISTORY ON SHEET ONE.

VERTICAL JAMB ATTACHMENT (WOOD FRAME BUILDINGS):
3/8"x3" LAG SCREWS ON 24" CENTERS. 1–1/8" O.D. WASHER REQUIRED. LAG SCREWS MAY BE COUNTERSUNK (BUT NOT REQUIRED) TO PROVIDE A FLUSH MOUNTING SURFACE. HORIZONTAL JAMBS DO NOT TRANSFER LOAD.

VERTICAL JAMB ATTACHMENT (C–90 BLOCK OR 2,000 PSI MIN. CONCRETE COLUMN):
3/8"x3" SLEEVE ANCHOR BOLTS ON 22" CENTERS (2,000 PSI MIN. CONCRETE). WASHERS INCLUDED WITH SLEEVE ANCHORS.
OR
1/4"x3" TAPCON SCREWS ON 19" CENTERS (2,000 PSI MIN. CONCRETE) OR 10" CENTERS (C–90 BLOCK). 1" O.D. WASHERS REQUIRED WITH TAPCONS.
ANCHORS MAY BE COUNTERSUNK (BUT NOT REQUIRED) TO PROVIDE A FLUSH MOUNTING SURFACE. HORIZONTAL JAMBS DO NOT TRANSFER LOAD.

OTHER JAMB CONFIGURATIONS: REFER TO DASMA TDS–161. A LICENSED DESIGN PROFESSIONAL MAY ALSO BE EMPLOYED TO APPROVE ALTERNATE FASTENERS AND/OR JAMB CONFIGURATIONS.

PREPARATION OF JAMBS BY OTHERS

NOTE: THE DESIGN OF THE SUPPORTING STRUCTURAL ELEMENTS SHALL BE THE RESPONSIBILITY OF THE PROFESSIONAL OF RECORD FOR THE BUILDING OR STRUCTURE AND IN ACCORDANCE WITH CURRENT BUILDING CODES FOR THE LOADS LISTED ON THIS DRAWING.

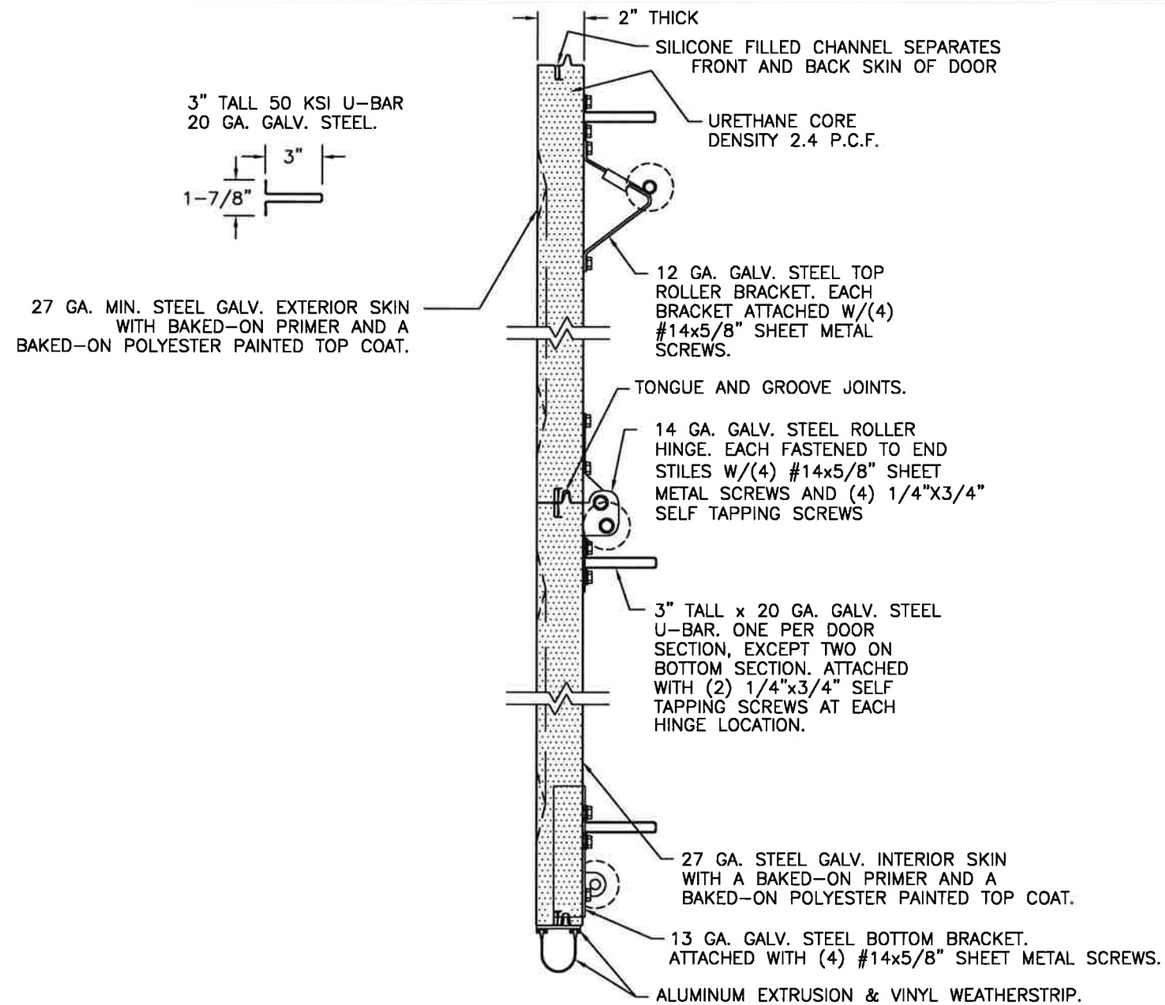

SECTION A–A (SIDE VIEW)

SCOTT HAMILTON LICENSE No 63286 STATE OF FLORIDA PROFESSIONAL ENGINEER

8/11/20

DESIGN ENGINEER:
SCOTT HAMILTON, P.E.
FLORIDA LICENSE No. 63286

DESIGN LOADS: +38.0 P.S.F. & –44.0 P.S.F.
TEST LOADS: +57.0 P.S.F. & –66.0 P.S.F.

MANUFACTURING PRODUCT CODE DSIU–1F471			
PART NO.: N/A			
Unless Stated Otherwise TOLERANCES are .0 = ±.031, .00 = ±.015, .000 = ±.005, .0000 = ±.001, Degrees = ±1/2°	Clopay CORPORATION 8585 Duke Boulevard Mason, OH 45040 USA Tel. No. 513–770–4800 Fax No. 513–770–4853	WINDLOAD RATING W6 DP38	
	DESCRIPTION: GALLERY 2" PUR SINGLE CAR +38/–44 PSF		
	DRAWN BY: MW / DATE: 9/7/95	SCALE: NTS	DWG. SIZE B
	CHECKED BY: -- / DATE: --	SHEET 3 OF 4	
Unless Stated Otherwise DIMENSIONS ARE IN INCHES.	DWG. NO.: 104432 – A/B	VER: IBC	

FLORIDA PRODUCT APPROVAL 16546

MODELS	SHORT	LONG
CLOPAY GALLERY	GD2SU, GR2SU	GD2LU, GR2LU
HOLMES ARTISTRY	AR2SU	AR2LU
IDEAL EXPRESSIONS	ED2SU	ED2LU

MODELS	NARROW	WIDE
CLOPAY BRIDGEPORT	BD2NU, BR2NU	BD2EU, BR2EU
HOLMES WESTPORT	PR2NU	PR2EU

MODELS	FLUSH	RIBBED
CLOPAY CLASSIC	9202, HDPC20	9205, HDPR20
HOLMES CLASSIC	7202	7205
IDEAL CLASSIC	8202, MFC68U	MFR68U

SHEET: 4 OF 4

REVISIONS					
REV. NO.	ZONE:	DATE:	ECN NO.	APPVD:	DESCRIPTION
03	–	–	–	–	SEE REVISION HISTORY ON SHEET ONE.

2" TRACK CONFIGURATION.

NOTE: TRACK CONFIGURATION ABOVE THE DOOR OPENING DOES NOT AFFECT THE WIND LOAD RATING OF THIS DOOR.

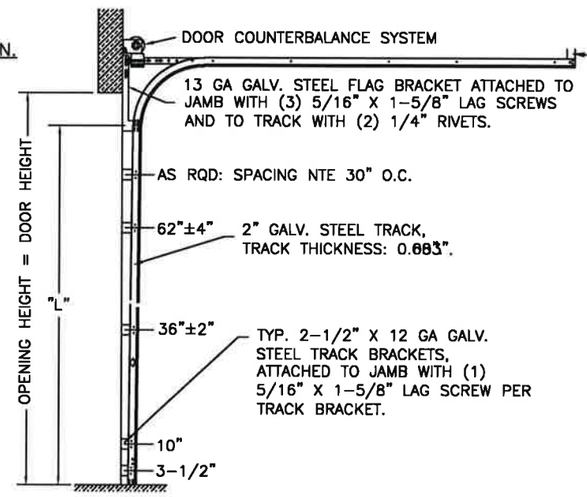

HORIZONTAL TRACK SUPPORT BY DOOR INSTALLER (TO SUIT).

DOOR HEIGHT	"L"
6'-6"	70"
7'-0"	76"
7'-6"	82"
8'-0"	88"
8'-6"	94"
9'-0"	100"
9'-6"	106"
10'-0"	112"
10'-6"	118"
11'-0"	124"
11'-6"	130"
12'-0"	136"
12'-6"	142"
13'-0"	148"
13'-6"	154"
14'-0"	160"
14'-6"	166"
15'-0"	172"
15'-6"	178"
16'-0"	184"

JAMB CONFIGURATION.

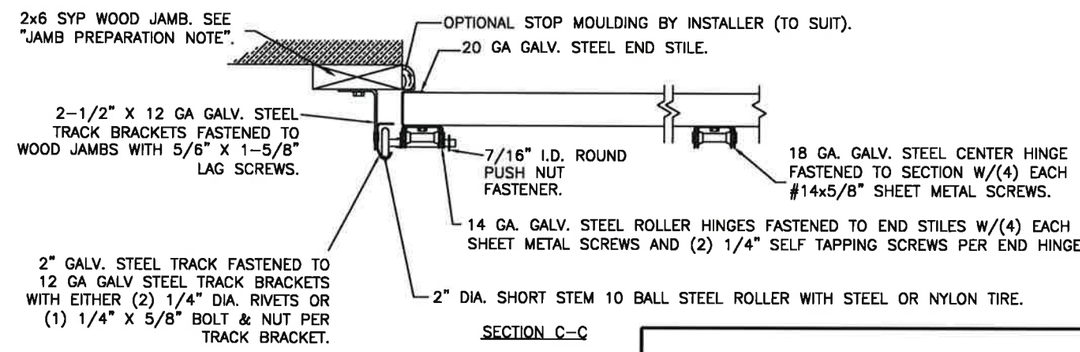

SECTION C-C

PREPARATION OF JAMBS BY OTHERS.

3" TRACK IS ALSO AVAILABLE.

LHR BRACKET (2-1/2" x 5-3/4" x 12GA) ATTACHED WITH (2) 1/4" x 3/4" SELF TAPPING SCREWS.

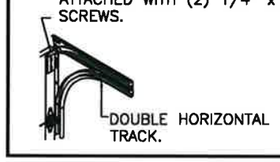

DOUBLE TRACK
LOW HEADROOM OPTION
(AVAIL. FOR BOTH 2" AND 3" TRACK)

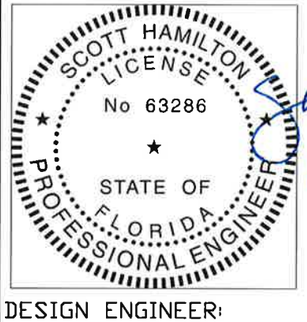

8/11/20

DESIGN ENGINEER:
SCOTT HAMILTON, P.E.
FLORIDA LICENSE No. 63286

DESIGN LOADS: +38.0 P.S.F. & -44.0 P.S.F.
TEST LOADS: +57.0 P.S.F. & -66.0 P.S.F.

Unless Stated Otherwise TOLERANCES are
.0 = ±.031
.00 = ±.015
.000 = ±.005
.0000 = ±.001
Degrees = ±1/2°
Unless Stated Otherwise DIMENSIONS ARE IN INCHES.

Clopay CORPORATION
8585 Duke Boulevard
Mason, OH 45040 USA
Tel. No. 513-770-4800
Fax No. 513-770-4853

MANUFACTURING PRODUCT CODE DSIU-1F471			
PART NO.: N/A			
DESCRIPTION: GALLERY 2" PUR SINGLE CAR +38/-44 PSF		WINDLOAD RATING W6 DP38	
DRAWN BY: MW	DATE: 9/7/95	SCALE: NTS	DWG. SIZE B
CHECKED BY: --	DATE: --	SHEET 4 OF 4	
DWG. NO.: 104432 - A/B		VER: IBC	

FLORIDA PRODUCT APPROVAL 16546