GENERAL NOTES:

1. TKJ ENGINEERING, LLC. HAS NO CONTROL OF THE MANUFACTURING, PERFORMANCE, OR INSTALLATION OF THIS PRODUCT. THESE GENERIC PLANS WERE ENGINEERED IN ACCORDANCE WITH ACCEPTED ENGINEERING PRACTICES AND TEST DATA PROVIDED BY THE MANUFACTURER.

2. THE ADVANCED SCREEN SYSTEM SHOWN ON THIS PRODUCT EVALUATION DOCUMENT HAS BEEN DESIGNED IN ACCORDANCE WITH THE 5TH EDITION (2014) FLORIDA BUILDING CODE (FBC). THIS ADVANCED SCREEN SYSTEM SHALL NOT BE INSTALLED IN HIGH VELOCITY HURRICANE ZONES (MIAMI-DADE COUNTY/BROWARD COUNTY). THE ADVANCED SCREEN ZIPPER SYSTEM INSTALLED IN WIND ZONE 4 (SEE FBC SECTION 1609.1.2.2), OR ESSENTIAL FACILITIES SHALL MEET THE MINIMUM SEPARATION TO GLASS. THE ADVANCED SCREEN ROPE SYSTEM INSTALLED IN ANY WIND ZONE SHALL MEET THE MINIMUM SEPARATION TO GLASS. DESIGN WIND LOADS SHALL BE DETERMINED AS PER SECTION 1609 OF THE ABOVE REFERENCED CODE, IN ACCORDANCE WITH ASCE 7-10, AND FOR A BASIC WIND SPEED AS REQUIRED BY THE JURISDICTION WHERE THE ADVANCED SCREEN SYSTEM WILL BE INSTALLED. THE ADVANCED SCREEN SYSTEM ADEQUACY FOR IMPACT, DEFLECTION, AND FATIGUE RESISTANCE HAS BEEN VERIFIED IN ACCORDANCE WITH SECTION 1609.1.2 OF THE ABOVE REFERENCED CODE AND AS PER ASTM E330, E1886, & E1996 AT FENESTRATION TESTING LABORATORY, INC. PER THEIR REPORTS (SEE LIST OF REPORTS).

3. LIMITATIONS OF USE:

   A. THIS PRODUCT SHALL NOT BE USED IN HIGH VELOCITY HURRICANE ZONES (SEE FBC SECTION 202).

   B. FOR DETERMINING INTERNAL PRESSURE IN THESE REFERENCED CODES, THE ZIPPER SYSTEM IS CLASSIFIED AS NON-POROUS, HAVING A POROSITY OF LESS THEN 10% AND THE ROPE SYSTEM IS CLASSIFIED AS POROUS, HAVING A POROSITY OF GREATER THAN 10% FOR THE CONDITIONS SHOWN IN THIS PRODUCT EVALUATION DOCUMENTS. SCREEN PANELS MUST COMPLETELY COVER AN OPENING IN ALL DIRECTIONS. GLASS SEPARATION IS NOT REQUIRED EXCEPT FOR THE FOLLOWING CONDITIONS.

      - ESSENTIAL FACILITIES AS DEFINED IN ASCE 7-10
      - WHERE THE SPECIFYING AUTHORITY HAS SPECIFIED OPTIONAL ADDITIONAL PASS/FAIL CRITERIA IN ACCORDANCE WITH ASTM E1996 FOR WIND ZONE 4 AS DEFINED IN ASTM E1996 WITH MODIFICATION BY THE FBC SECTION 1609.1.2.2 (FBC: LOCATIONS WITH ULTIMATE WIND SPEED GREATER THAN 170 MPH).
      - THE ADVANCED SCREEN ZIPPER SYSTEM INSTALLED IN WIND ZONE 4 OR ESSENTIAL FACILITIES AND ADVANCED SCREEN SYSTEM ROPE SYSTEM IN ANY WIND ZONE SHALL MEET THE MINIMUM SEPARATION TO GLASS TABLES ON SHEET 3.

   C. INSTALLATION WITH INTERMEDIATE, END, AND CORNER MULLIONS REQUIRE A FLORIDA PRODUCT APPROVAL FOR USE WITH THIS TYPE OF SHUTTER SYSTEM.

   D. INSTALLATIONS SHALL NOT EXCEED THE MAXIMUM ALLOWABLE STRESS DESIGN (ASD) DESIGN RATINGS AND SIZE LIMITS PROVIDED IN THIS PRODUCT EVALUATION. ULTIMATE DESIGN WIND LOADS DETERMINED BY THE FLORIDA BUILDING CODE AND ASCE 7-10 SHALL BE REDUCED TO ASD BY MULTIPLYING BY 0.6 (SEE FBC SECTION 1609.1.2.4)

   E. IMPACT LEVEL D; 9-1/4 LB LARGE MISSILE IMPACT.

   F. ANCHORING OR LOADING CONDITIONS OTHER THAN THOSE SHOWN IN THESE DETAILS ARE NOT PART OF THIS APPROVAL

   G. THIS PRODUCT CAN BE USED AS A WINDBORNE DEBRIS SHUTTER PRODUCT.

   H. INCREASE IN ALLOWABLE STRESS (1.33) HAS NOT BEEN INCORPORATED INTO THE DESIGN OF THIS PRODUCT.

4. IT SHALL BE THE RESPONSIBILITY OF THE CONTRACTOR TO VERIFY THAT THE EXISTING STRUCTURE IS ADEQUATE TO SUPPORT THE MINIMUM LOADS SHOWN ON THE TABLES ON SHEET 2. EXISTING STRUCTURES NOT ABLE TO SUPPORT THESE LOADS SHALL BE EVALUATED AS A SITE SPECIFIC PROJECT. SEE NOTE 4 OF PRODUCT EVALUATION NOTES.

5. ALL ALUMINUM EXTRUSION SHALL BE 6063-T6 ALLOY (UNLESS OTHERWISE NOTED OR CAN BE REPLACED WITH 6061-T6).

6. WIND ABATEMENT MANUFACTURE'S LABELS SHALL BE IN ACCORDANCE WITH SECTION 1710.8 OF THE FLORIDA BUILDING CODE.

7. FOR DETERMINING INTERNAL PRESSURE IN THE ABOVE REFERENCED CODES, THIS PRODUCT IS CLASSIFIED AS NON-POROUS, HAVING A POROSITY OF LESS THEN 10%, FOR THE CONDITIONS SHOWN IN THIS PRODUCT EVALUATION DOCUMENT. SCREEN PANELS MUST COMPLETELY COVER AN OPENING IN ALL DIRECTIONS.

8. THE ROLL-UP SCREEN SHALL BE STORED IN THE UP POSITION AND THE SLIDE SCREEN, GROMMET SCREEN, AND STRAP SCREENS SHALL BE STORED IN A DESIGNATED AND ACCESSIBLE AREA, DURING NORMAL WEATHER CONDITIONS

PRODUCT EVALUATION NOTES:

1. THIS PRODUCT EVALUATION DOCUMENT (P.E.D.) PREPARED BY THIS ENGINEER IS GENERIC AND DOES NOT PROVIDE INFORMATION FOR A SITE SPECIFIC PROJECT; I.E. WHERE THE SITE CONDITIONS DEVIATE FROM THE P.E.D.

2. CONTRACTOR SHALL BE RESPONSIBLE FOR THE SELECTION, PURCHASE, AND INSTALLATION OF THIS PRODUCT BASED ON THIS PRODUCT EVALUATION PROVIDED AND SHALL NOT DEVIATE FROM THE CONDITIONS DETAILED ON THIS DOCUMENT.

3. THIS PRODUCT EVALUATION DOCUMENT WILL BE CONSIDERED INVALID IF ALTERED BY ANY MEANS.

4. SITE SPECIFIC PROJECTS SHALL BE PREPARED BY A FLORIDA REGISTERED ENGINEER OR ARCHITECT WHICH WILL BECOME THE ENGINEER OF RECORD (E.O.R.) FOR THE PROJECT AND WHO WILL BE RESPONSIBLE FOR THE PROPER USE OF THE P.E.D. THE ENGINEER OF RECORD, ACTING AS A DELEGATED ENGINEER TO THE P.E.D. ENGINEER, SHALL SUBMIT SITE SPECIFIC DRAWINGS FOR REVIEW.

ANCHOR & FASTENING NOTES:

1. ALL FASTENERS SHALL BE CORROSION RESISTANT COATED CARBON STEEL AS PER DIN 50018 OR STAINLESS STEEL 304 OR 316 SERIES WITH 50 KSI YIELD POINT AND 90 KSI ULTIMATE TENSILE STRENGTH.

2. NO EMBEDMENT INTO NON-STRUCTURAL COMPONENTS SUCH AS, STUCCO, TILE, SIDING, ETC. SHALL BE CONSIDERED AS PART OF THE EMBEDMENT.

3. THE ANCHOR SPACING AND DESIGN PRESSURES ARE VALID FOR EDGE DISTANCES AND MINIMUM EMBEDMENT ON SHEET 2. FOR EDGE DISTANCES LESS THAN SPECIFIED, THE SCREEN DESIGN PRESSURE SHALL BE REDUCED BY THE EDGE DISTANCE REDUCTION FACTORS SHOWN ON SHEET 2. THE EDGE DISTANCE SHALL NOT BE LESS THAN 1 1/2" IN CONCRETE OR CMU, 3/4" IN WOOD, OR MINIMUM SPECIFIED BY THE MANUFACTURER. THE MINIMUM EDGE DISTANCE FOR THE 1/4-14 DRIL-FLEX SCREW IS 1/2".

ZIPPER SCREEN FABRIC SPECIFICATION:

FIBER CONTENT: 100% POLYPROPYLENE
FINISH: CALENDARED
WEIGHT (ASTM D3776): 9.7 -OZ/SQUARE YARD
THICKNESS (ASTM D5199): 21.0 MIL
SELVAGE: HEAT CUT OR WOVEN
TENSILE STRENGTH (GRAB METHOD, ASTM D4632): WARP - 500 lbs., WEFT - 550 lbs.
BURST STRENGTH (ASTM D3786): 750 PSI
TEAR STRENGTH (ASTM D4533): WARP - 200 lbs., WEFT - 250 lbs.
ABRASION RESISTANCE (ASTM D4886): 95% STRENGTH RETAINED
PUNCTURE STRENGTH (ASTM D4833): 200 lbs.
AIR FLOW: 175 CFM
UV RETENTION (ASTM D-G154): 70%
OPEN AREA (COE-02215) 5%

ROPE SCREEN FABRIC SPECIFICATION:

FIBER CONTENT: 100% POLYPROPYLENE
WEAVE: 3/3 BASKETWEAVE
YARN SIZE (ASTM D1907): WARP - 925, FILL - 925 DENIER MONOFILL PP
WEIGHT (ASTM D3776): 10.0 -OZ/SQUARE YARD
THICKNESS (ASTM D5199): 24.0 MIL
SELVAGE: HEAT CUT OR WOVEN
TENSILE STRENGTH (ASTM D4632): WARP - 500 lbs., WEFT - 450 lbs.
BURST STRENGTH (ASTM D3786): 985 PSI
AIR FLOW: 300 CFM
SHADE: 88%

EDGES:

ZIPPER SCREEN: 2" THERMO-SEALED POLYPROPYLENE REINFORCED EDGES
ROPE SCREEN: 4" THERMO-SEALED POLYPROPYLENE REINFORCED EDGES

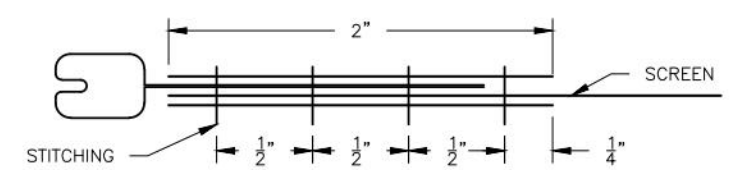

STITCHING - DETAIL
ZIPPER SCREEN RAIL EDGES - SCALE: 1:1

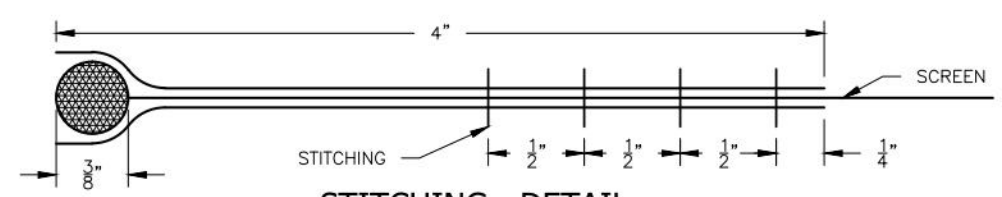

STITCHING - DETAIL
ROPE SCREEN RAIL EDGES - SCALE: 1:1

LIST OF REPORTS:

FENESTRATION TESTING LABORATORY, INC.

LABORATORY No. 7001
DATE: 2/5/2013
PROJECT No. 12-4031
FILE No. 12-374
TEST PROTOCOL: ASTM E330-02, E1886-05, & E1996-05
MAXIMUM WIDTH TESTED: 294"
DESIGN PRESSURE TESTED: 60 PSF
STRUCTURAL LOAD TESTED: 90 PSF
MINIMUM WIDTH TESTED: 55.5"
DESIGN PRESSURE TESTED: 140 PSF
STRUCTURAL LOAD TESTED: 210 PSF

ARCHITECTURAL TESTING

REPORT No. 97368.01-401-44
DATE: 5/05/2010
TEST PROTOCOL: ASTM E330-02, E1886-05, & E1996-05
MAXIMUM WIDTH TESTED: 296.5"
DESIGN PRESSURE TESTED: 75 PSF
STRUCTURAL LOAD TESTED: 112.5 PSF

REPORT No. A0255.01-401-36
DATE: 5/07/2010
TEST PROTOCOL: ASTM E330-02
MAXIMUM WIDTH TESTED: 168"
DESIGN PRESSURE TESTED: 75 PSF
MINIMUM WIDTH TESTED: 36"
DESIGN PRESSURE TESTED: 75 PSF

#	DATE	REVISIONS

ADVANCED HURRICANE TECHNOLOGY
6063 JAMES LANE, NAPLES, FL 34109
PHONE: 239.260.0020; FAX: 239.260.0023
WWW.AHT-USA.NET

ADVANCED SCREEN ROLL-UP SYSTEM

TKJ Engineering, LLC.
1635 AUTUMN CREEK DRIVE, RIVERVIEW, FL 33569
PH.: 813.404.7649; EM.: TKJENGINEERING@VERIZON.NET
CERTIFICATE OF AUTHORIZATION NUMBER: 28582

DRAWN BY:	DATE:	SCALE:	PROJ. #:
TKJ	4/30/15	N.T.S.	15-0803

THIS IS TO CERTIFY THAT, TO THE BEST OF MY KNOWLEDGE, THESE PLANS & SPECIFICATIONS ARE IN COMPLIANCE WITH THE BUILDING CODE REQUIREMENTS

TREVOR JOHNSON LICENSE No. 65624 STATE OF FLORIDA PROFESSIONAL ENGINEER

Trevor Johnson 4-30-15

TREVOR JOHNSON
FLORIDA P.E. # 65624

LOADS ON EXISTING STRUCTURE FROM SCREEN SYSTEM

T_X = PARALLEL LOADS (PLF)

SCREEN SPAN	PRESSURE (PSF)																													
36"	449	441	429	416	404	391	383	370	357	343	330	316	307	293	278	264	249	234	218	202	186	169	146	30
42"	534	520	506	491	477	467	452	437	421	406	390	379	363	346	329	312	295	277	259	240	221	201	180	
48"	616	600	583	567	556	539	522	504	487	469	456	438	419	400	381	361	341	321	299	278	256	233	209	
54"	698	680	662	643	630	611	592	572	552	532	518	497	476	455	433	411	388	365	341	316	291	265	239	
60"	781	761	740	720	705	684	662	640	618	596	580	557	533	509	485	460	435	409	382	355	327	298	268	
66"	865	842	819	796	781	757	733	709	685	668	643	617	591	565	538	510	482	453	424	394	363	331	298	
72"	948	924	899	874	856	831	805	778	751	733	705	677	649	620	590	560	530	498	466	433	399	364	328	
78"	1032	1006	979	961	933	905	876	848	819	789	768	738	707	676	644	611	578	543	508	473	436	397	358	
84"	1117	1088	1059	1030	1009	979	948	917	886	854	832	799	766	732	697	662	626	589	551	512	472	431	388	
90"	1202	1171	1140	1108	1076	1054	1021	988	954	920	895	860	824	788	751	713	674	634	594	552	509	465	419	
96"	1277	1254	1221	1187	1153	1129	1094	1058	1022	985	959	922	883	844	805	764	723	680	637	592	546	499	449	
102"	1362	1338	1302	1266	1230	1204	1167	1129	1090	1051	1024	984	943	901	859	816	771	726	680	632	583	533	480	
108"	1448	1422	1384	1346	1307	1280	1240	1200	1159	1118	1088	1046	1002	958	913	867	820	772	723	673	621	567	511	
114"	1534	1506	1466	1426	1385	1343	1314	1271	1228	1184	1140	1108	1062	1016	968	919	870	819	767	713	658	602	543	
120"	1620	1578	1549	1506	1463	1419	1388	1343	1298	1251	1204	1171	1123	1073	1023	972	919	866	811	754	696	636	574	
126"	1707	1663	1632	1587	1541	1495	1463	1415	1367	1319	1269	1234	1183	1131	1078	1024	969	913	855	795	734	671	605	
132"	1794	1748	1715	1668	1620	1572	1538	1488	1437	1386	1334	1297	1244	1189	1134	1077	1019	960	899	837	772	706	637	
138"	1881	1833	1799	1749	1699	1648	1597	1561	1508	1454	1400	1344	1305	1248	1190	1130	1069	1007	944	878	811	746	669	
144"	1969	1918	1867	1831	1779	1726	1672	1634	1579	1522	1465	1408	1366	1306	1246	1183	1120	1055	988	920	849	776	701	
150"	2057	2004	1951	1913	1859	1803	1747	1707	1650	1591	1531	1471	1428	1365	1302	1237	1171	1103	1033	962	888	812	733	
156"	2146	2091	2035	1996	1939	1881	1822	1781	1721	1660	1598	1535	1490	1425	1358	1291	1221	1151	1078	1004	927	847	765	
162"	2235	2178	2119	2079	2019	1959	1898	1836	1793	1729	1664	1599	1552	1484	1415	1345	1273	1199	1123	1046	966	883	797	
168"	2325	2265	2204	2143	2100	2038	1974	1910	1865	1796	1731	1663	1594	1524	1447	1399	1324	1247	1169	1088	1005	919	830	
174"	-	2352	2290	2226	2182	2117	2051	1984	1937	1868	1798	1728	1656	1604	1529	1453	1376	1296	1215	1131	1044	955	863	
180"	-	-	2375	2309	2263	2196	2127	2058	2009	1938	1866	1792	1718	1642	1587	1508	1427	1345	1260	1174	1084	992	896	
186"	-	-	-	2393	2345	2275	2204	2133	2060	2008	1934	1857	1780	1701	1645	1565	1479	1394	1306	1216	1124	1028	929	
192"	-	-	-	-	2405	2355	2282	2208	2132	2079	2002	1923	1843	1761	1703	1618	1532	1443	1353	1260	1164	1065	962	
198"	-	-	-	-	-	2360	2283	2205	2150	2070	1988	1906	1821	1761	1674	1584	1493	1399	1303	1204	1101	995		
204"	-	-	-	-	-	-	2358	2278	2221	2139	2054	1969	1882	1793	1729	1637	1543	1446	1346	1244	1138	1028		
210"	-	-	-	-	-	-	-	2351	2267	2207	2121	2032	1943	1851	1785	1690	1593	1493	1390	1284	1175	1062		
216"	-	-	-	-	-	-	-	-	2425	2338	2277	2187	2096	2003	1909	1841	1743	1643	1540	1434	1325	1212	1096	
222"	-	-	-	-	-	-	-	-	-	2409	2334	2254	2160	2065	1967	1868	1797	1693	1587	1478	1366	1250	1130	
228"	-	-	-	-	-	-	-	-	-	-	2416	2321	2224	2126	2026	1924	1850	1744	1634	1522	1407	1287	1164	
234"	-	-	-	-	-	-	-	-	-	-	-	2388	2289	2188	2085	1980	1904	1794	1682	1567	1448	1325	1198	
240"	-	-	-	-	-	-	-	-	-	-	-	-	2354	2250	2140	2036	1958	1845	1730	1611	1489	1363	1232	
246"	-	-	-	-	-	-	-	-	-	-	-	-	-	2419	2312	2203	2092	1979	1897	1778	1656	1531	1401	1266
252"	-	-	-	-	-	-	-	-	-	-	-	-	-	-	2374	2263	2149	2032	1948	1826	1701	1572	1439	1301
258"	-	-	-	-	-	-	-	-	-	-	-	-	-	-	-	2322	2206	2086	2000	1875	1746	1614	1477	1336
264"	-	-	-	-	-	-	-	-	-	-	-	-	-	-	-	-	2382	2262	2140	2015	1923	1792	1656	1516	1371
270"	-	-	-	-	-	-	-	-	-	-	-	-	-	-	-	-	-	2443	2320	2194	2066	1972	1837	1698	1555	1406
276"	-	-	-	-	-	-	-	-	-	-	-	-	-	-	-	-	-	-	2377	2248	2117	2021	1883	1740	1593	1441
282"	-	-	-	-	-	-	-	-	-	-	-	-	-	-	-	-	-	-	-	2435	2303	2168	2030	1929	1783	1632	1476
288"	-	-	-	-	-	-	-	-	-	-	-	-	-	-	-	-	-	-	-	-	2358	2220	2078	1975	1826	1671	1511

LOADS ON EXISTING STRUCTURE FROM SCREEN SYSTEM

T_Y = PERPENDICULAR LOADS (PLF)

SCREEN SPAN	PRESSURE (PSF)																													
36"	140	135	130	125	120	115	110	105	100	95	90	85	80	75	70	65	60	55	50	45	40	35	30	
42"	250	240	230	220	210	206	196	187	177	167	158	153	144	135	126	117	108	99	90	81	73	64	56	45
48"	286	274	263	251	246	235	224	213	202	191	186	175	164	153	143	133	122	112	102	92	83	73	63	
54"	321	308	295	282	277	264	251	239	226	214	208	196	184	172	160	149	137	126	114	103	92	82	71	
60"	357	342	328	314	307	293	279	265	251	238	231	218	204	191	178	165	152	139	127	114	102	90	78	
66"	393	377	361	345	338	322	307	292	276	269	254	239	225	210	195	181	167	153	139	126	112	99	86	
72"	428	411	394	376	369	352	335	318	301	294	277	261	245	229	213	197	182	167	152	137	122	108	94	
78"	465	446	427	408	400	381	363	345	327	309	301	283	265	248	231	214	197	180	164	148	132	116	101	
84"	501	480	460	440	431	411	391	372	352	333	324	305	286	267	249	230	212	194	177	159	142	125	109	
90"	557	515	494	472	450	441	420	398	378	357	347	327	306	286	266	247	227	208	189	171	152	134	116	
96"	560	550	527	504	481	471	448	426	403	381	371	349	327	306	284	263	243	222	202	182	162	143	124	
102"	596	586	561	536	512	501	477	453	429	405	395	371	348	325	302	280	258	236	214	193	172	152	132	
108"	632	621	595	569	543	531	505	480	455	430	418	393	369	345	320	297	273	250	227	205	183	161	139	
114"	669	657	629	601	574	546	534	507	481	454	428	416	390	364	339	313	289	264	240	216	193	170	147	
120"	705	675	663	634	605	576	563	535	507	479	451	438	411	384	357	330	304	278	253	228	203	179	155	
126"	742	710	697	667	636	606	593	562	533	503	474	461	432	403	375	347	320	293	266	239	213	188	163	
132"	778	746	732	699	667	636	622	590	559	528	497	484	453	423	394	364	335	307	279	251	224	197	171	
138"	815	781	767	733	699	666	633	618	585	553	521	489	475	443	412	381	351	321	292	263	234	206	179	
144"	852	816	781	766	731	696	661	646	612	578	544	511	496	463	431	399	367	336	305	274	245	215	186	
150"	889	852	815	799	762	726	690	674	639	603	568	533	518	483	449	416	383	350	318	286	255	225	194	
156"	927	888	849	833	794	756	719	703	665	628	592	556	539	503	468	433	399	365	331	298	266	234	202	
162"	964	924	883	866	827	787	748	709	692	654	616	578	541	524	487	451	415	379	344	310	276	243	210	
168"	1002	960	918	876	859	818	777	737	719	679	639	600	562	544	506	468	431	394	358	322	287	252	219	
174"	-	996	952	909	891	849	806	764	746	705	664	623	583	565	525	486	447	409	371	334	298	262	227	
180"	-	-	987	942	924	879	836	792	773	730	688	646	604	563	544	503	463	423	384	346	308	271	235	
186"	-	-	-	976	956	911	865	820	775	756	712	668	625	582	563	521	479	438	398	358	319	281	243	
192"	-	-	-	-	962	942	895	848	802	782	736	691	646	602	582	539	496	453	411	370	330	290	251	
198"	-	-	-	-	-	924	876	829	808	761	714	668	622	602	557	512	468	425	383	341	300	259		
204"	-	-	-	-	-	-	905	855	834	785	737	689	642	596	574	529	483	439	395	352	309	268		
210"	-	-	-	-	-	-	-	882	832	810	760	711	662	614	592	545	498	452	407	363	319	276		
216"	-	-	-	-	-	-	-	-	909	857	835	783	733	682	653	611	562	514	466	419	374	328	284	
222"	-	-	-	-	-	-	-	-	-	883	860	807	754	703	652	601	578	529	480	432	385	338	293	
228"	-	-	-	-	-	-	-	-	-	-	884	830	776	723	671	619	595	544	494	444	396	348	301	
234"	-	-	-	-	-	-	-	-	-	-	-	854	798	744	690	636	612	559	508	457	407	358	309	
240"	-	-	-	-	-	-	-	-	-	-	-	-	820	764	709	654	629	575	522	469	418	367	318	
246"	-	-	-	-	-	-	-	-	-	-	-	-	842	785	728	671	616	590	536	482	429	377	326	
252"	-	-	-	-	-	-	-	-	-	-	-	-	-	805	747	689	632	606	550	495	440	387	335	
258"	-	-	-	-	-	-	-	-	-	-	-	-	-	826	766	707	648	621	564	507	452	397	344	
264"	-	-	-	-	-	-	-	-	-	-	-	-	-	785	725	665	606	578	520	463	407	352		
270"	-	-	-	-	-	-	-	-	-	-	-	-	-	805	742	681	620	592	533	474	417	361		
276"	-	-	-	-	-	-	-	-	-	-	-	-	-	760	697	635	607	546	486	427	370			
282"	-	-	-	-	-	-	-	-	-	-	-	-	-	778	714	650	588	559	497	437	378			
288"	-	-	-	-	-	-	-	-	-	-	-	-	-	-	730	665	602	572	509	447	387			

Anchor	Concrete & Filled CMU		Hollow CMU (1800 PSI)		Wood (S.G. = .55)	
	Min. Edge	Min Emb.	Min. Edge	Min Emb.	Min. Edge	Min Emb.
5/16" ULTRACON HFH	3 1/4"	2"	3 1/4"	1 1/4"	2"	1 1/2"

LOADS ON EXISTING STRUCTURE

ROLL-UP INSTALLATIONS

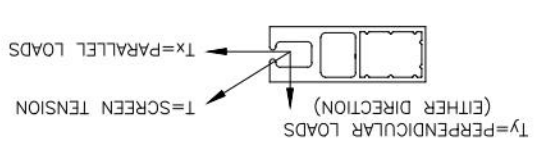

ADVANCED HURRICANE TECHNOLOGY
6063 JANES LANE NAPLES, FL 34109
PHONE: 239.260.0020 FAX: 239.260.0023
WWW.AHT-USA.NET

ADVANCED SCREEN ROLL-UP SYSTEM

#	DATE	REVISIONS

EKJ Engineering, LLC.
11635 AUTUMN CREEK DRIVE, RIVERVIEW, FL 33569
PH: 813.404.7649; EM: TKJENGINEERING@VERIZON.NET
CERTIFICATE OF AUTHORIZATION NUMBER: 28582

DATE:	DRAWN BY:	SCALE:	PROJ. #:
4/30/15	TKJ	N.T.S.	15-0803

THIS IS TO CERTIFY THAT, TO THE BEST OF MY KNOWLEDGE, THESE PLANS & SPECIFICATIONS ARE IN COMPLIANCE WITH THE BUILDING CODE REQUIREMENTS

STATE OF FLORIDA

TREVOR JOHNSON LICENSE No 65624

PROFESSIONAL ENGINEER

TREVOR JOHNSON
FLORIDA P.E. # 65624

2 of 2

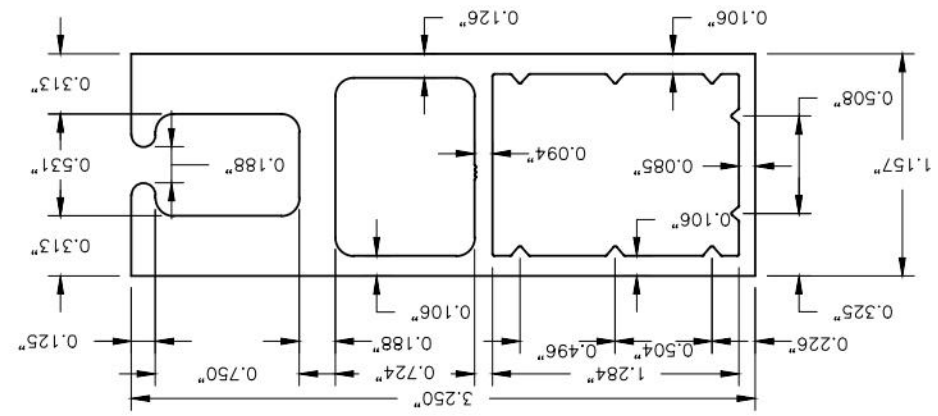

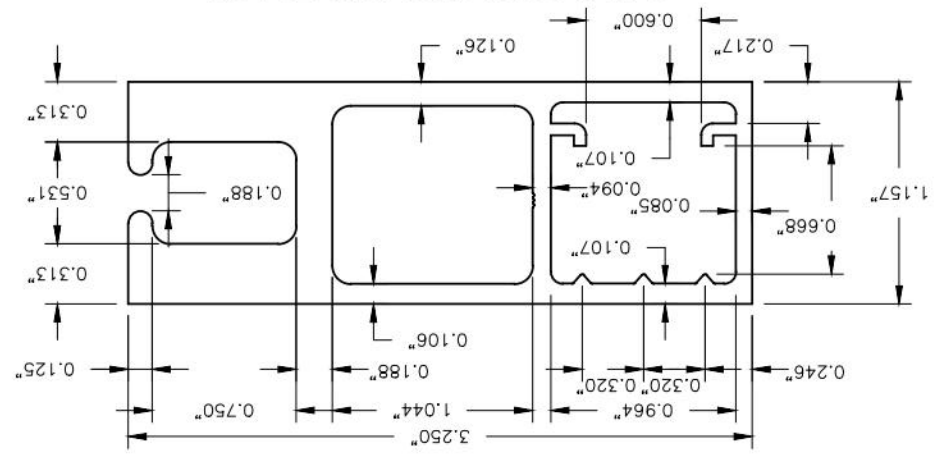

ZIPPER SCREEN MINIMUM SEPARATION TO GLAZING (INCHES) REQUIRED FOR INSTALLATION IN WIND ZONE 4 AND ESSENTAL FACILITIES

SCREEN SPAN	PRESSURE (PSF)																							
	30	35	40	45	50	55	60	65	70	75	80	85	90	95	100	105	110	115	120	125	130	135	140
36"	4.7	4.9	5.0	5.2	5.3	5.4	5.5	5.7	5.8	5.9	6.0	6.1	6.2	6.3	6.3	6.4	6.5	6.6	6.7	6.8	6.8	6.9	7.0
42"	5.2	5.4	5.6	5.7	5.9	6.0	6.2	6.3	6.4	6.6	6.7	6.8	6.9	7.0	7.1	7.3	7.4	7.5	7.6	7.7	7.8	7.8	7.9
48"	5.7	5.9	6.1	6.3	6.5	6.6	6.8	6.9	7.1	7.2	7.4	7.5	7.6	7.7	7.8	8.0	8.1	8.2	8.3	8.4	8.5	8.6	8.7
54"	6.2	6.4	6.6	6.8	6.9	7.0	7.2	7.4	7.6	7.7	7.9	8.0	8.2	8.3	8.4	8.6	8.7	8.8	8.9	9.1	9.2	9.3	9.4
60"	6.7	6.9	7.2	7.4	7.6	7.7	7.9	8.0	8.2	8.4	8.5	8.7	8.8	9.0	9.1	9.3	9.4	9.6	9.7	9.8	9.9	10.1	10.2
66"	7.2	7.4	7.7	7.9	8.1	8.3	8.4	8.6	8.7	8.9	9.0	9.2	9.4	9.5	9.7	9.8	10.0	10.1	10.3	10.4	10.6	10.7	10.8
72"	7.9	7.9	8.2	8.4	8.6	8.8	9.0	9.2	9.4	9.6	9.8	10.0	10.1	10.3	10.5	10.7	10.8	11.0	11.2	11.3	11.4	11.6	11.7
78"	8.3	8.4	8.7	8.9	9.1	9.3	9.5	9.7	9.9	10.1	10.4	10.6	10.8	11.0	11.2	11.5	11.7	11.8	12.0	12.2	12.3	12.5	12.6
84"	8.8	9.1	9.3	9.6	9.8	10.0	10.2	10.5	10.7	10.9	11.2	11.4	11.6	11.8	12.0	12.2	12.4	12.7	12.9	13.0	13.2	13.4	13.6
90"	9.3	9.6	9.9	10.2	10.4	10.7	10.9	11.2	11.4	11.6	11.8	12.0	12.2	12.4	12.6	12.8	13.0	13.2	13.4	13.6	13.8	14.0	14.1
96"	9.7	10.1	10.4	10.7	10.9	11.2	11.4	11.6	11.9	12.1	12.4	12.6	12.8	13.1	13.3	13.5	13.7	13.9	14.1	14.3	14.5	14.6	14.8
102"	10.1	10.5	10.8	11.1	11.4	11.6	11.9	12.2	12.4	12.7	13.0	13.2	13.4	13.7	13.9	14.1	14.3	14.5	14.7	14.9	15.1	15.3	15.5
108"	10.5	10.8	11.1	11.4	11.7	11.9	12.2	12.5	12.7	13.0	13.3	13.5	13.8	14.0	14.3	14.5	14.7	15.0	15.2	15.4	15.6	15.8	16.0
114"	10.9	11.2	11.4	11.7	12.0	12.2	12.5	12.7	13.0	13.2	13.5	13.8	14.1	14.3	14.6	14.9	15.1	15.4	15.6	15.8	16.0	16.3	16.5
120"	11.3	11.6	11.9	12.3	12.6	12.8	13.1	13.3	13.6	13.8	14.1	14.3	14.6	14.9	15.2	15.5	15.7	16.0	16.2	16.4	16.7	16.9	17.1
126"	11.8	12.1	12.3	12.6	12.8	13.1	13.3	13.6	13.8	14.1	14.3	14.6	14.9	15.2	15.5	15.7	16.0	16.3	16.5	16.8	17.0	17.3	17.5
132"	12.3	12.6	12.8	13.1	13.3	13.6	13.8	14.1	14.3	14.6	14.8	15.1	15.3	15.6	15.8	16.1	16.3	16.6	16.8	17.1	17.3	17.6	17.8
138"	12.8	13.1	13.3	13.6	13.8	14.1	14.3	14.6	14.8	15.1	15.3	15.6	15.8	16.1	16.3	16.6	16.8	17.1	17.3	17.6	17.8	18.1	18.3
144"	13.3	13.5	13.8	14.0	14.3	14.5	14.8	15.0	15.3	15.5	15.8	16.0	16.3	16.5	16.8	17.0	17.3	17.5	17.8	18.0	18.3	18.5	18.8
150"	13.8	14.0	14.3	14.5	14.8	15.0	15.3	15.5	15.8	16.0	16.3	16.5	16.8	17.0	17.3	17.5	17.8	18.0	18.3	18.5	18.8	19.0	19.3
156"	14.3	14.5	14.8	15.0	15.3	15.5	15.8	16.0	16.3	16.5	16.8	17.0	17.3	17.5	17.8	18.0	18.3	18.5	18.8	19.0	19.3	19.5	19.8
162"	14.8	15.0	15.3	15.5	15.8	16.0	16.3	16.5	16.8	17.0	17.3	17.5	17.8	18.0	18.3	18.5	18.8	19.0	19.3	19.5	19.8	20.0	20.3
168"	15.3	15.5	15.8	16.0	16.3	16.5	16.8	17.0	17.3	17.5	17.8	18.0	18.3	18.5	18.8	19.0	19.3	19.5	19.8	20.0	20.3	20.5	20.8
174"	15.8	16.0	16.3	16.5	16.8	17.0	17.3	17.5	17.8	18.0	18.3	18.5	18.8	19.0	19.3	19.5	19.8	20.0	20.3	20.5	20.8	21.0	21.3
180"	16.3	16.5	16.8	17.0	17.3	17.5	17.8	18.0	18.3	18.5	18.8	19.0	19.3	19.5	19.8	20.0	20.3	20.5	20.8	21.0	21.3	21.5	21.8
186"	16.8	17.0	17.3	17.5	17.8	18.0	18.3	18.5	18.8	19.0	19.3	19.5	19.8	20.0	20.3	20.5	20.8	21.0	21.3	21.5	21.8	22.0	22.3
192"	17.3	17.5	17.8	18.0	18.3	18.5	18.8	19.0	19.3	19.5	19.8	20.0	20.3	20.5	20.8	21.0	21.3	21.5	21.8	22.0	22.3	22.5	22.8
198"	17.8	18.0	18.3	18.5	18.8	19.0	19.3	19.5	19.8	20.0	20.3	20.5	20.8	21.0	21.3	21.5	21.8	22.0	22.3	22.5	22.8	23.1	-
204"	18.3	18.5	18.8	19.0	19.3	19.5	19.8	20.0	20.3	20.5	20.8	21.0	21.3	21.5	21.8	22.0	22.3	22.5	22.8	23.0	23.3	-	-
210"	18.8	19.0	19.3	19.5	19.8	20.0	20.3	20.5	20.8	21.0	21.3	21.5	21.8	22.0	22.3	22.5	22.8	23.0	23.3	-	-	-	-
216"	19.3	19.5	19.8	20.0	20.3	20.5	20.8	21.0	21.3	21.5	21.8	22.0	22.3	22.5	22.8	23.0	23.3	-	-	-	-	-	-
222"	19.8	20.0	20.3	20.5	20.8	21.0	21.3	21.5	21.8	22.0	22.3	22.5	22.8	23.0	23.3	23.5	-	-	-	-	-	-	-
228"	20.3	20.5	20.8	21.0	21.3	21.5	21.8	22.0	22.3	22.5	22.8	23.0	23.3	23.5	-	-	-	-	-	-	-	-	-
234"	20.8	21.0	21.3	21.5	21.8	22.0	22.3	22.5	22.8	23.0	23.3	23.5	-	-	-	-	-	-	-	-	-	-	-
240"	21.3	21.5	21.8	22.0	22.3	22.5	22.8	23.0	23.3	23.5	-	-	-	-	-	-	-	-	-	-	-	-	-
246"	21.8	22.0	22.3	22.5	22.8	23.0	23.3	23.5	-	-	-	-	-	-	-	-	-	-	-	-	-	-	-
252"	22.3	22.5	22.8	23.0	23.3	23.5	-	-	-	-	-	-	-	-	-	-	-	-	-	-	-	-	-
258"	22.8	23.0	23.3	23.5	-	-	-	-	-	-	-	-	-	-	-	-	-	-	-	-	-	-	-
264"	23.3	23.5	-	-	-	-	-	-	-	-	-	-	-	-	-	-	-	-	-	-	-	-	-
270"	23.8	24.0	-	-	-	-	-	-	-	-	-	-	-	-	-	-	-	-	-	-	-	-	-
276"	24.3	24.5	-	-	-	-	-	-	-	-	-	-	-	-	-	-	-	-	-	-	-	-	-
282"	24.8	25.0	-	-	-	-	-	-	-	-	-	-	-	-	-	-	-	-	-	-	-	-	-
288"	25.3	25.5	-	-	-	-	-	-	-	-	-	-	-	-	-	-	-	-	-	-	-	-	-

ROPE SCREEN MINIMUM SEPARATION TO GLAZING (INCHES) REQUIRED FOR INSTALLATION IN ALL WIND ZONE

SCREEN SPAN	PRESSURE (PSF)																							
	30	35	40	45	50	55	60	65	70	75	80	85	90	95	100	105	110	115	120	125	130	135	140
36"	4.7	4.9	5.0	5.2	5.3	5.4	5.5	5.7	5.8	5.9	6.0	6.1	6.2	6.3	6.3	6.4	6.5	6.6	6.7	6.8	6.8	6.9	7.0
42"	5.2	5.4	5.6	5.7	5.9	6.0	6.2	6.3	6.4	6.6	6.7	6.8	6.9	7.0	7.1	7.3	7.4	7.5	7.6	7.7	7.8	7.8	7.9
48"	5.7	5.9	6.1	6.3	6.5	6.6	6.8	6.9	7.1	7.2	7.4	7.5	7.6	7.7	7.8	8.0	8.1	8.2	8.3	8.4	8.5	8.6	8.7
54"	6.2	6.4	6.6	6.8	6.9	7.0	7.2	7.4	7.6	7.7	7.9	8.0	8.2	8.3	8.4	8.6	8.7	8.8	8.9	9.1	9.2	9.3	9.4
60"	6.7	6.9	7.2	7.4	7.6	7.7	7.9	8.0	8.2	8.4	8.5	8.7	8.8	9.0	9.1	9.3	9.4	9.6	9.7	9.8	9.9	10.1	10.2
66"	7.2	7.4	7.7	7.9	8.1	8.3	8.4	8.6	8.7	8.9	9.0	9.2	9.4	9.5	9.7	9.8	10.0	10.1	10.3	10.4	10.6	10.7	10.8
72"	7.9	7.9	8.2	8.4	8.6	8.8	9.0	9.2	9.4	9.6	9.8	10.0	10.1	10.3	10.5	10.7	10.8	11.0	11.2	11.3	11.4	11.6	11.7
78"	8.3	8.4	8.7	8.9	9.1	9.3	9.5	9.7	9.9	10.1	10.4	10.6	10.8	11.0	11.2	11.5	11.7	11.8	12.0	12.2	12.3	12.5	12.6
84"	8.8	9.1	9.3	9.6	9.8	10.0	10.2	10.5	10.7	10.9	11.2	11.4	11.6	11.8	12.0	12.2	12.4	12.7	12.9	13.0	13.2	13.4	13.6
90"	9.3	9.6	9.9	10.2	10.4	10.7	10.9	11.2	11.4	11.6	11.8	12.0	12.2	12.4	12.6	12.8	13.0	13.2	13.4	13.6	13.8	14.0	14.1
96"	9.7	10.1	10.4	10.7	10.9	11.2	11.4	11.6	11.9	12.1	12.4	12.6	12.8	13.1	13.3	13.5	13.7	13.9	14.1	14.3	14.5	14.6	14.8
102"	10.1	10.5	10.8	11.1	11.4	11.6	11.9	12.2	12.4	12.7	13.0	13.2	13.4	13.7	13.9	14.1	14.3	14.5	14.7	14.9	15.1	15.3	15.5
108"	10.5	10.8	11.1	11.4	11.7	11.9	12.2	12.5	12.7	13.0	13.3	13.5	13.8	14.0	14.3	14.5	14.7	15.0	15.2	15.4	15.6	15.8	16.0
114"	10.9	11.2	11.4	11.7	12.0	12.2	12.5	12.7	13.0	13.2	13.5	13.8	14.1	14.3	14.6	14.9	15.1	15.4	15.6	15.8	16.0	16.3	16.5
120"	11.3	11.6	11.9	12.3	12.6	12.8	13.1	13.3	13.6	13.8	14.1	14.3	14.6	14.9	15.2	15.5	15.7	16.0	16.2	16.4	16.7	16.9	17.1
126"	11.8	12.1	12.3	12.6	12.8	13.1	13.3	13.6	13.8	14.1	14.3	14.6	14.9	15.2	15.5	15.7	16.0	16.3	16.5	16.8	17.0	17.3	17.5
132"	12.3	12.6	12.8	13.1	13.3	13.6	13.8	14.1	14.3	14.6	14.8	15.1	15.3	15.6	15.8	16.1	16.3	16.6	16.8	17.1	17.3	17.6	17.8
138"	12.8	13.1	13.3	13.6	13.8	14.1	14.3	14.6	14.8	15.1	15.3	15.6	15.8	16.1	16.3	16.6	16.8	17.1	17.3	17.6	17.8	18.1	18.3
144"	13.3	13.5	13.8	14.0	14.3	14.5	14.8	15.0	15.3	15.5	15.8	16.0	16.3	16.5	16.8	17.0	17.3	17.5	17.8	18.0	18.3	18.5	18.8
150"	13.8	14.0	14.3	14.5	14.8	15.0	15.3	15.5	15.8	16.0	16.3	16.5	16.8	17.0	17.3	17.5	17.8	18.0	18.3	18.5	18.8	19.0	19.3
156"	14.3	14.5	14.8	15.0	15.3	15.5	15.8	16.0	16.3	16.5	16.8	17.0	17.3	17.5	17.8	18.0	18.3	18.5	18.8	19.0	19.3	19.5	19.8
162"	14.8	15.0	15.3	15.5	15.8	16.0	16.3	16.5	16.8	17.0	17.3	17.5	17.8	18.0	18.3	18.5	18.8	19.0	19.3	19.5	19.8	20.0	20.3
168"	15.3	15.5	15.8	16.0	16.3	16.5	16.8	17.0	17.3	17.5	17.8	18.0	18.3	18.5	18.8	19.0	19.3	19.5	19.8	20.0	20.3	20.5	20.8
174"	15.8	16.0	16.3	16.5	16.8	17.0	17.3	17.5	17.8	18.0	18.3	18.5	18.8	19.0	19.3	19.5	19.8	20.0	20.3	20.5	20.8	21.0	21.3
180"	16.3	16.5	16.8	17.0	17.3	17.5	17.8	18.0	18.3	18.5	18.8	19.0	19.3	19.5	19.8	20.0	20.3	20.5	20.8	21.0	21.3	21.5	21.8
186"	16.8	17.0	17.3	17.5	17.8	18.0	18.3	18.5	18.8	19.0	19.3	19.5	19.8	20.0	20.3	20.5	20.8	21.0	21.3	21.5	21.8	22.0	22.3
192"	17.3	17.5	17.8	18.0	18.3	18.5	18.8	19.0	19.3	19.5	19.8	20.0	20.3	20.5	20.8	21.0	21.3	21.5	21.8	22.0	22.3	22.5	22.8
198"	17.8	18.0	18.3	18.5	18.8	19.0	19.3	19.5	19.8	20.0	20.3	20.5	20.8	21.0	21.3	21.5	21.8	22.0	22.3	22.5	22.8	23.1	-
204"	18.3	18.5	18.8	19.0	19.3	19.5	19.8	20.0	20.3	20.5	20.8	21.0	21.3	21.5	21.8	22.0	22.3	22.5	22.8	23.0	23.3	-	-
210"	18.8	19.0	19.3	19.5	19.8	20.0	20.3	20.5	20.8	21.0	21.3	21.5	21.8	22.0	22.3	22.5	22.8	23.0	23.3	-	-	-	-
216"	19.3	19.5	19.8	20.0	20.3	20.5	20.8	21.0	21.3	21.5	21.8	22.0	22.3	22.5	22.8	23.0	23.3	-	-	-	-	-	-
222"	19.8	20.0	20.3	20.5	20.8	21.0	21.3	21.5	21.8	22.0	22.3	22.5	22.8	23.0	23.3	23.5	-	-	-	-	-	-	-
228"	20.3	20.5	20.8	21.0	21.3	21.5	21.8	22.0	22.3	22.5	22.8	23.0	23.3	23.5	-	-	-	-	-	-	-	-	-
234"	20.8	21.0	21.3	21.5	21.8	22.0	22.3	22.5	22.8	23.0	23.3	23.5	-	-	-	-	-	-	-	-	-	-	-
240"	21.3	21.5	21.8	22.0	22.3	22.5	22.8	23.0	23.3	23.5	-	-	-	-	-	-	-	-	-	-	-	-	-
246"	21.8	22.0	22.3	22.5	22.8	23.0	23.3	23.5	-	-	-	-	-	-	-	-	-	-	-	-	-	-	-
252"	22.3	22.5	22.8	23.0	23.3	23.5	-	-	-	-	-	-	-	-	-	-	-	-	-	-	-	-	-
258"	22.8	23.0	23.3	23.5	-	-	-	-	-	-	-	-	-	-	-	-	-	-	-	-	-	-	-
264"	23.3	23.5	-	-	-	-	-	-	-	-	-	-	-	-	-	-	-	-	-	-	-	-	-
270"	23.8	24.0	-	-	-	-	-	-	-	-	-	-	-	-	-	-	-	-	-	-	-	-	-
276"	24.3	24.5	-	-	-	-	-	-	-	-	-	-	-	-	-	-	-	-	-	-	-	-	-
282"	24.8	25.0	-	-	-	-	-	-	-	-	-	-	-	-	-	-	-	-	-	-	-	-	-
288"	25.3	25.5	-	-	-	-	-	-	-	-	-	-	-	-	-	-	-	-	-	-	-	-	-

ADVANCED HURRICANE TECHNOLOGY
6063 JANES LANE, NAPLES, FL 34109
PHONE: 239.260.0020; FAX: 239.260.0023
WWW.AHT-USA.NET

ADVANCED SCREEN ROLL-UP SYSTEM

#	DATE	REVISIONS

TKJ Engineering, LLC.
3165 AUTUMN CREEK DRIVE, RIVERVIEW, FL 33569
PHONE: 813.404.7649; EMAIL: TKJENGINEERING@VERIZON.NET
CERTIFICATE OF AUTHORIZATION NUMBER: 28582

DATE:	DRAWN BY:	SCALE:	PROJ. #:
4/30/15	TKJ	N.T.S.	15-0803

THIS IS TO CERTIFY THAT, TO THE BEST OF MY KNOWLEDGE, THESE PLANS & SPECIFICATIONS ARE IN COMPLIANCE WITH THE BUILDING CODE REQUIREMENTS

TREVOR JOHNSON LICENSE No 65624 STATE OF FLORIDA PROFESSIONAL ENGINEER

Trevor Johnson P.E. 5/30/15

LICENSE NUMBER: 65624

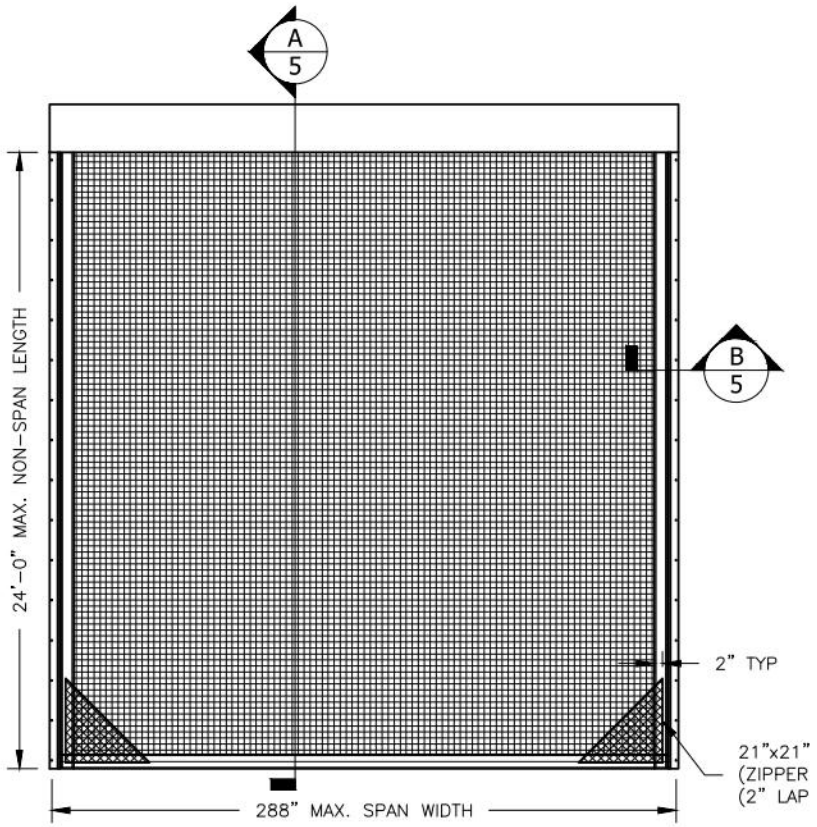

ROLL-UP SCREEN SINGLE UNIT - ELEVATION

TYPICAL SINGLE SPAN INSTALLATION - N.T.S.

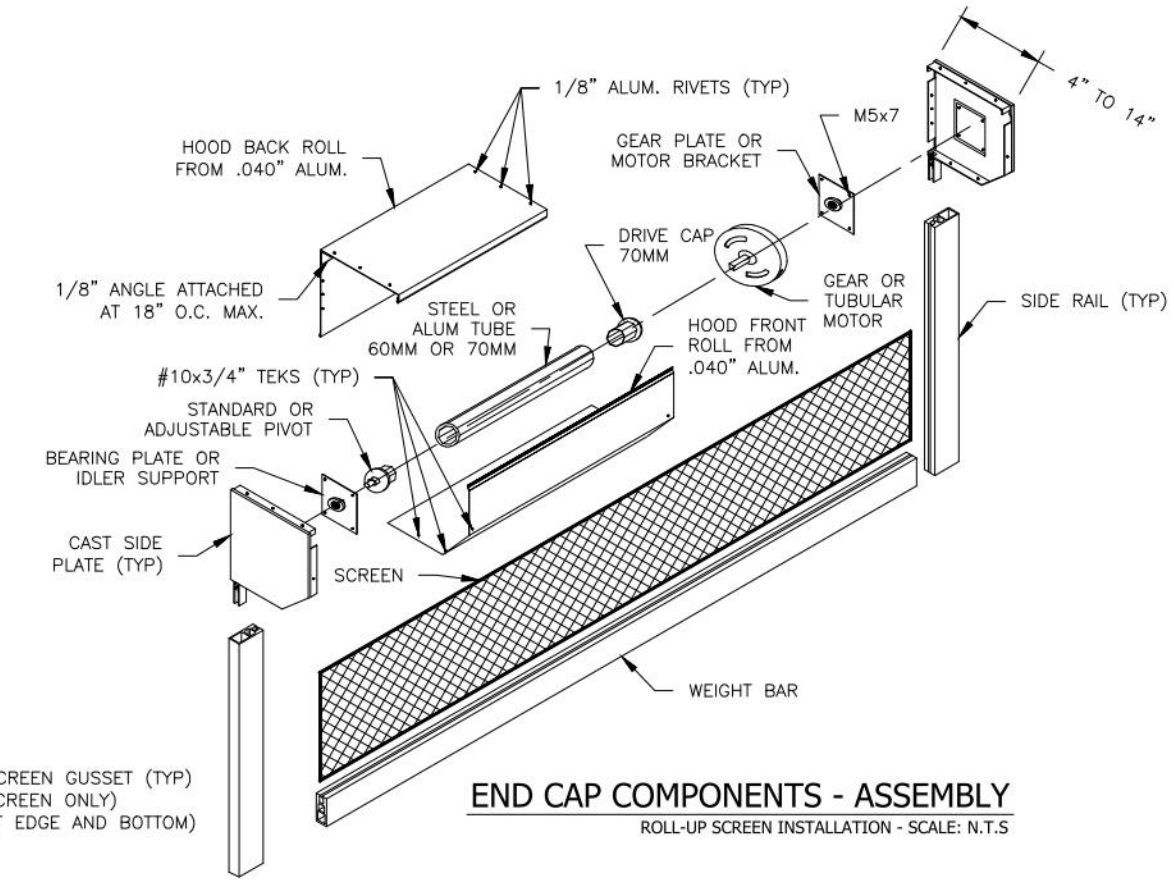

END CAP COMPONENTS - ASSEMBLY

ROLL-UP SCREEN INSTALLATION - SCALE: N.T.S

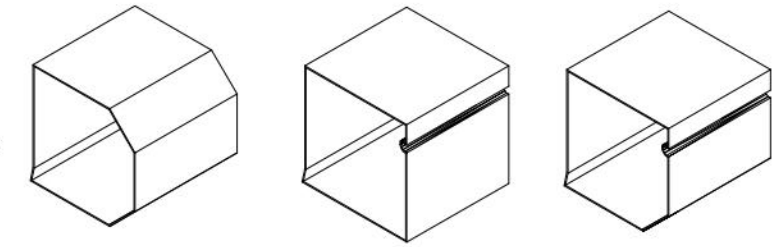

ALUMINUM BOX COVER

ROLL-UP SCREEN INSTALLATION - SCALE: N.T.S

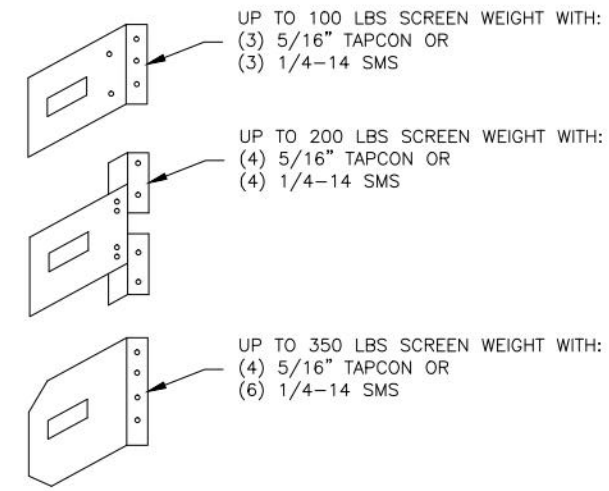

MOUNTING BRACKET

ROLL-UP SCREEN - SCALE: N.T.S

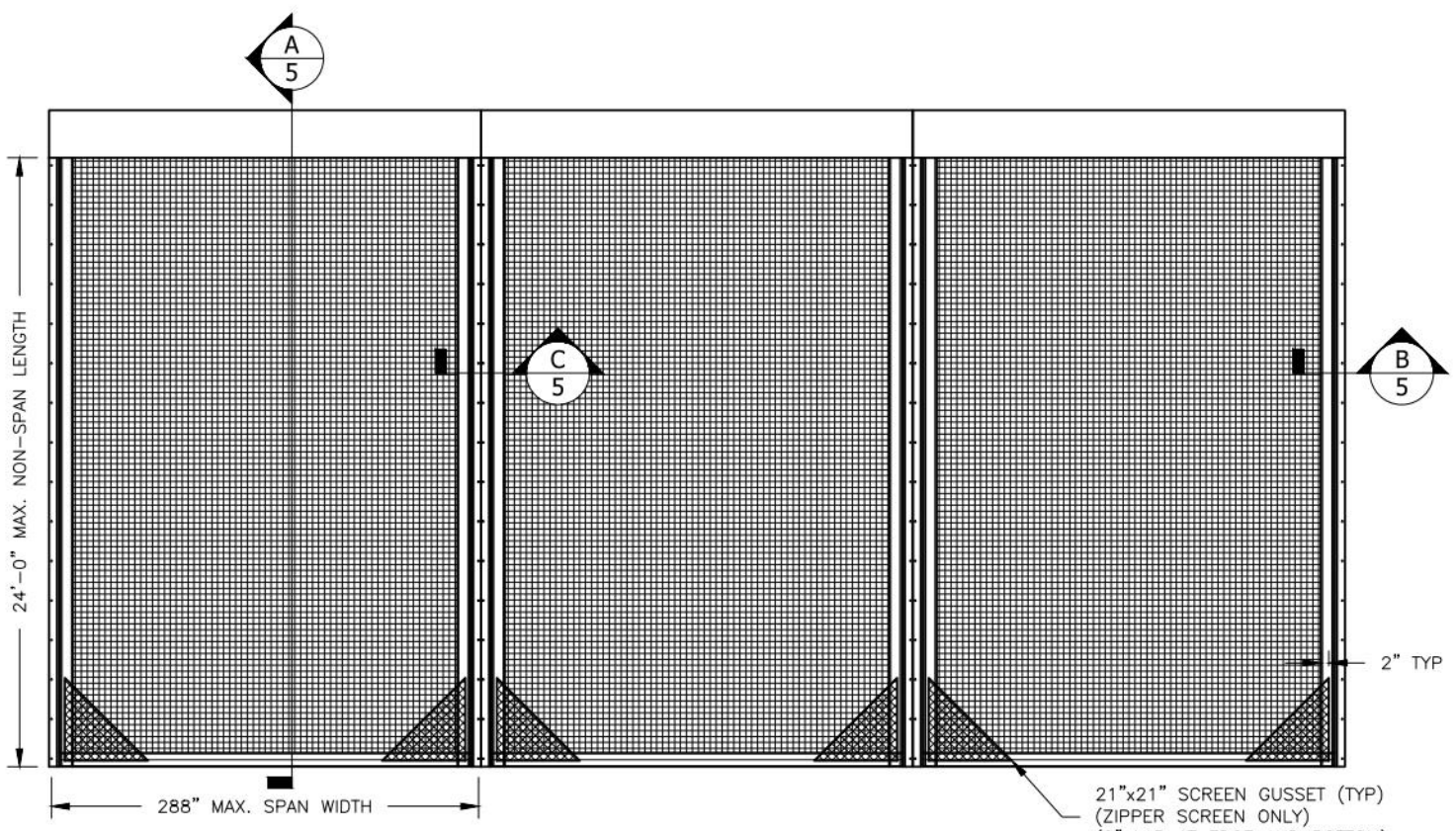

ROLL-UP SCREEN MULTIPLE UNIT - ELEVATION

APPROVED INTERMEDIATE MULLION REQUIRED FOR INSTALLATION - N.T.S.

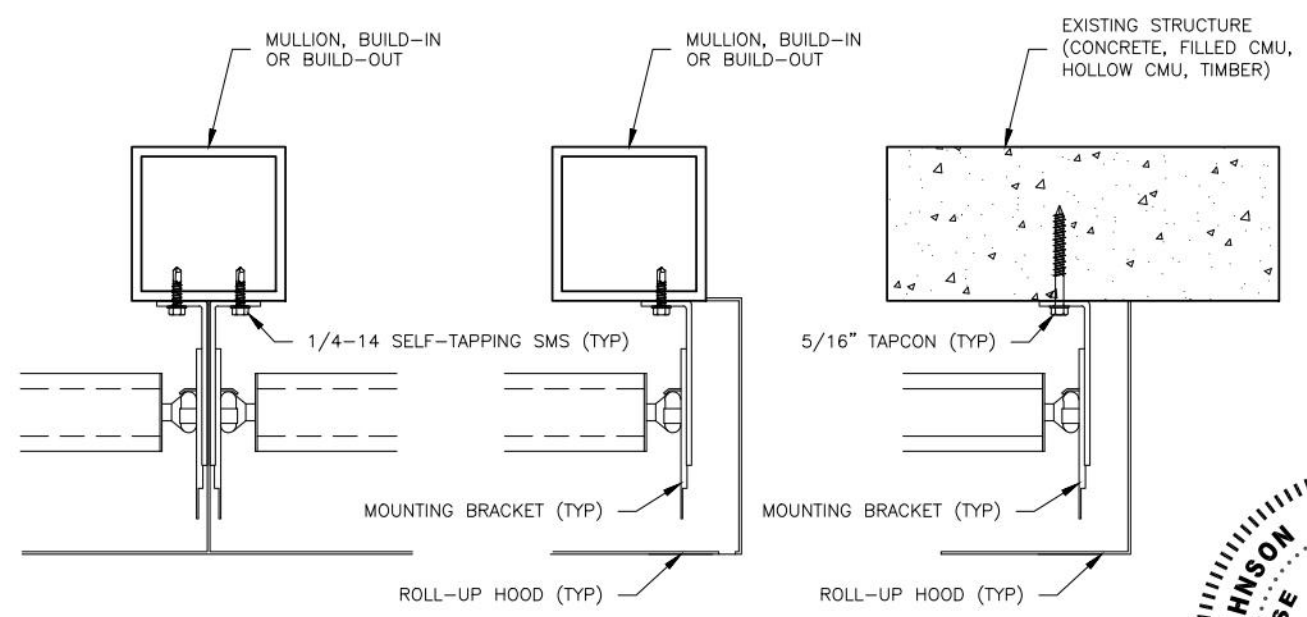

MOUNTING BRACKET - DETAILS

ROLL-UP SCREEN INSTALLATION - SCALE: N.T.S

#	DATE	REVISIONS

ADVANCED HURRICANE TECHNOLOGY
6063 JAMES LANE, NAPLES, FL 34109
PHONE: 239.260.0020; FAX: 239.260.0023
WWW.AHT-USA.NET

ADVANCED SCREEN ROLL-UP SYSTEM

TKJ Engineering, LLC.
11835 AUTUMN CREEK DRIVE, RIVERVIEW, FL 33569
PH.: 813.404.7649; EM.: TKJENGINEERING@VERIZON.NET
CERTIFICATE OF AUTHORIZATION NUMBER: 28582

DATE:	DRAWN BY:	SCALE:	PROJ. #:
4/30/15	TKJ	N.T.S.	15-0803

THIS IS TO CERTIFY THAT, TO THE BEST OF MY KNOWLEGE, THESE PLANS AND SPECIFICATIONS ARE IN COMPLIANCE WITH THE BUILDING CODE REQUIREMENTS

STATE OF FLORIDA
TREVOR JOHNSON
LICENSE No 65624
PROFESSIONAL ENGINEER
TREVOR KEITH JOHNSON
LICENSE NUMBER 65624

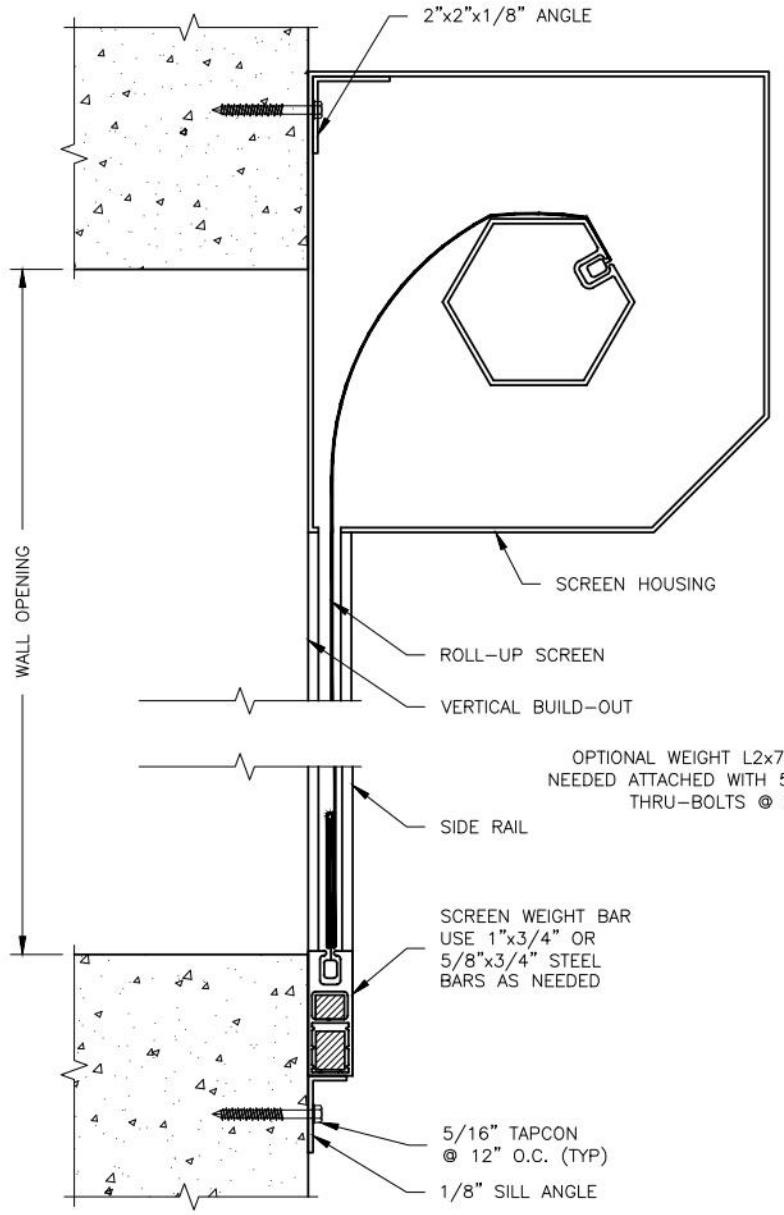

A1 TYPICAL DIRECT MOUNT
ROLL-UP SCREEN AT WALL - SCALE: N.T.S.

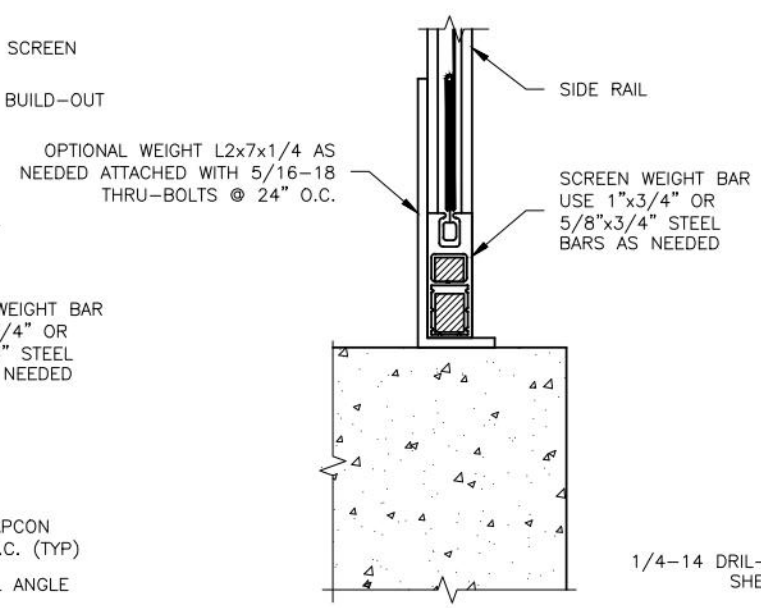

A2 TYPICAL DIRECT MOUNT
ROLL-UP SCREEN AT FLOOR - SCALE: N.T.S.

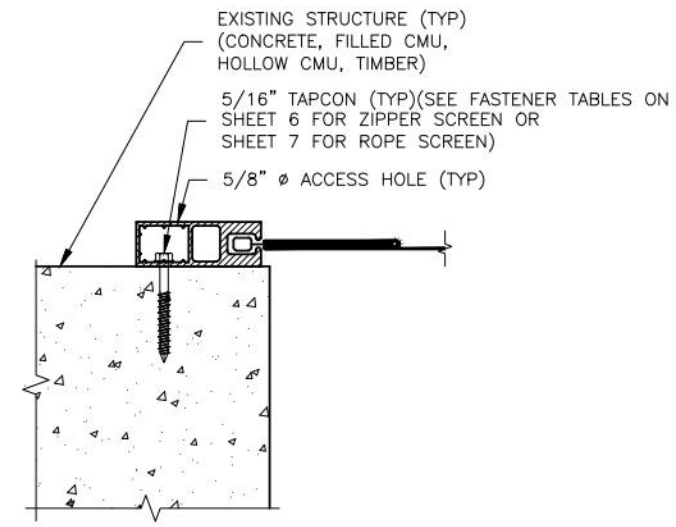

B DIRECT MOUNT - SECTION
ROLL-UP SCREEN AT WALL - SCALE: N.T.S.

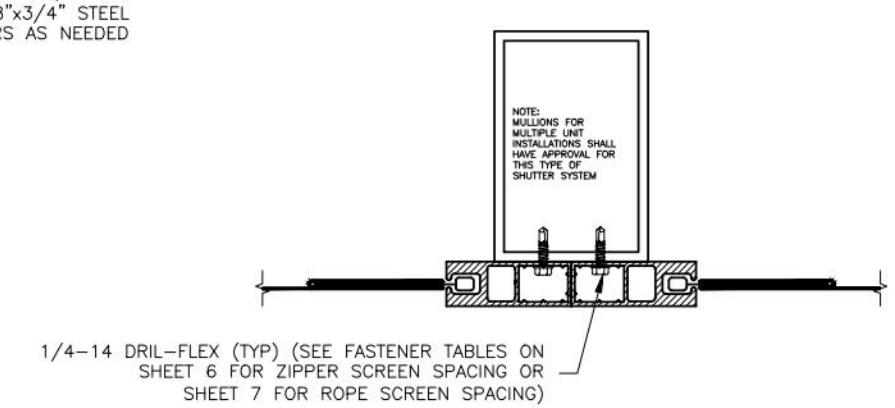

C MULLION MOUNT - SECTION
ROLL-UP SCREEN AT MULLIONS - SCALE: N.T.S.

#	DATE	REVISIONS

ADVANCED HURRICANE TECHNOLOGY
6063 JAMES LANE, NAPLES, FL 34109
PHONE: 239.260.0020; FAX: 239.260.0023
WWW.AHT-USA.NET

ADVANCED SCREEN ROLL-UP SYSTEM

TKJ Engineering, LLC.
11825 AUTUMN CREEK DRIVE, RIVERVIEW, FL 33569
PH: 813.404.7649; EM.: TKJENGINEERING@VERIZON.NET
CERTIFICATE OF AUTHORIZATION NUMBER: 28582

DATE:	DRAWN BY:	SCALE:	PROJ. #:
4/30/15	TKJ	N.T.S.	15-0803

TREVOR JOHNSON LICENSE No 65624 STATE OF FLORIDA PROFESSIONAL ENGINEER

THIS IS TO CERTIFY THAT, TO THE BEST OF MY KNOWLEDGE, THESE PLANS & SPECIFICATIONS ARE IN COMPLIANCE WITH THE BUILDING CODE REQUIREMENTS

Trevor Johnson 3-0-15

TREVOR JOHNSON
FLORIDA P.E. LICENSE #65624

ZIPPER SCREEN DIRECT MOUNT

MAXIMUM DESIGN PRESSURE OF A SIDE RAIL SCREEN
FOR ANY LENGTH ATTACHED WITH
5/16" ELCO ULTRACON HFH @ 6" O.C.

SCREEN SPANS UP TO	CONC. & FILLED CMU (3500 PSI) PRESSURE (PSF)	CONC. & FILLED CMU (2600 PSI) PRESSURE (PSF)	HOLLOW CMU (1800 PSI) PRESSURE (PSF)	TIMBER (S.G. = .55) PRESSURE (PSF)
36"	140	140	128	140
42"	140	140	107	140
48"	140	140	90	140
54"	140	140	79	140
60"	140	140	71	126
66"	140	140	62	114
72"	140	140	57	101
78"	140	133	51	92
84"	140	120	47	84
90"	135	113	44	78
96"	127	104	42	72
102"	117	96	37	67
108"	109	90	36	62
114"	103	85	33	57
120"	97	79	32	54
126"	91	75	29	52
132"	86	72	28	47
138"	83	68	27	46
144"	80	64	25	42
150"	74	63	24	42
156"	71	58	24	38
162"	69	57	22	38
168"	65	53	20	35
174"	64	53	20	33
180"	59	49	20	33
186"	59	48	19	31
192"	55	46	18	29
198"	54	43	17	29
204"	52	43	17	28
210"	49	41	17	26
216"	49	39	16	25
222"	47	39	15	25
228"	44	38	14	25
234"	44	36	13	23
240"	43	34	13	22
246"	41	34	13	21
252"	39	33	13	21
258"	39	32	13	21
264"	38	30	13	20
270"	37	30	12	19
276"	35	30	11	18
282"	35	29	11	17
288"	35	28	10	17

ZIPPER SCREEN DIRECT MOUNT

MAXIMUM DESIGN PRESSURE OF A SIDE RAIL SCREEN
FOR ANY LENGTH ATTACHED WITH
5/16" ELCO ULTRACON HFH @ 4" O.C.

SCREEN SPANS UP TO	CONC. & FILLED CMU (3500 PSI) PRESSURE (PSF)	CONC. & FILLED CMU (2600 PSI) PRESSURE (PSF)	HOLLOW CMU (1800 PSI) PRESSURE (PSF)	TIMBER (S.G. = .55) PRESSURE (PSF)
36"	140	140	140	140
42"	140	140	140	140
48"	140	140	140	140
54"	140	140	126	140
60"	140	140	112	140
66"	140	140	101	140
72"	140	140	90	140
78"	140	140	84	140
84"	140	140	76	135
90"	140	140	70	126
96"	140	140	65	115
102"	140	140	61	109
108"	140	140	57	101
114"	140	135	52	94
120"	140	129	51	88
126"	140	121	47	83
132"	137	115	45	79
138"	130	109	42	74
144"	124	104	41	70
150"	118	98	38	67
156"	113	93	37	63
162"	109	90	35	61
168"	106	87	33	58
174"	100	81	33	55
180"	96	80	31	53
186"	94	76	29	51
192"	88	74	29	48
198"	86	70	28	48
204"	83	69	27	45
210"	80	65	25	43
216"	77	65	25	43
222"	75	61	25	40
228"	72	60	24	39
234"	71	58	22	39
240"	68	55	21	37
246"	66	55	21	35
252"	65	53	21	34
258"	61	50	21	34
264"	61	50	20	33
270"	60	49	19	31
276"	57	47	18	30
282"	56	45	17	30
288"	56	45	17	30

ZIPPER SCREEN DIRECT MOUNT

MAXIMUM DESIGN PRESSURE OF A SIDE RAIL SCREEN
FOR ANY LENGTH ATTACHED WITH
1/4"-14 ELCO DRIL-FLEX HWH TO ALUMINUM OR STEEL

SCREEN SPANS UP TO	@ 6" O.C. 1/8" AL/ST PRESSURE (PSF)	@ 6" O.C. 1/4" AL/ST PRESSURE (PSF)	@ 4" O.C. 1/8" AL/ST PRESSURE (PSF)	@ 4" O.C. 1/4" AL/ST PRESSURE (PSF)
36"	140	140	140	140
42"	140	140	140	140
48"	120	140	140	140
54"	108	140	140	140
60"	96	140	140	140
66"	85	140	133	140
72"	78	140	120	140
78"	73	140	111	140
84"	67	140	102	140
90"	62	128	96	140
96"	57	121	89	140
102"	52	111	84	140
108"	50	103	79	140
114"	47	97	73	140
120"	44	91	68	140
126"	42	86	65	137
132"	40	82	62	130
138"	37	79	58	124
144"	37	74	57	117
150"	34	70	53	111
156"	33	69	52	107
162"	32	63	49	104
168"	30	62	47	100
174"	29	58	46	94
180"	29	58	43	91
186"	27	54	43	88
192"	25	53	41	84
198"	24	50	38	82
204"	25	48	38	77
210"	24	48	37	77
216"	23	45	35	72
222"	21	44	34	71
228"	21	44	34	68
234"	21	41	33	66
240"	21	39	31	65
246"	20	39	30	62
252"	19	38	30	61
258"	18	36	30	60
264"	17	35	29	57
270"	17	35	27	56
276"	17	35	26	55
282"	17	33	25	53
288"	17	32	26	51

ZIPPER SCREEN DIRECT MOUNT

MAXIMUM DESIGN PRESSURE OF A SIDE RAIL SCREEN
FOR ANY LENGTH ATTACHED WITH
5/16"-24 ELCO DRIL-FLEX HWH TO ALUMINUM OR STEEL

SCREEN SPANS UP TO	@ 6" O.C. 1/8" AL/ST PRESSURE (PSF)	@ 6" O.C. 1/4" AL/ST PRESSURE (PSF)	@ 4" O.C. 1/8" AL/ST PRESSURE (PSF)	@ 4" O.C. 1/4" AL/ST PRESSURE (PSF)
36"	140	140	140	140
42"	140	140	140	140
48"	124	140	140	140
54"	108	140	140	140
60"	96	140	140	140
66"	87	140	135	140
72"	78	140	123	140
78"	73	140	114	140
84"	67	140	103	140
90"	62	140	96	140
96"	57	134	90	140
102"	53	126	84	140
108"	51	117	79	140
114"	47	109	73	140
120"	45	103	69	140
126"	42	97	67	140
132"	40	92	62	140
138"	37	88	59	140
144"	37	85	57	133
150"	34	80	53	127
156"	33	76	52	122
162"	32	74	49	117
168"	30	69	47	112
174"	29	68	46	106
180"	29	64	43	103
186"	27	63	43	100
192"	25	59	41	95
198"	24	59	38	92
204"	25	55	38	89
210"	24	54	37	86
216"	23	53	35	83
222"	21	50	34	81
228"	21	49	34	78
234"	21	48	33	76
240"	21	45	31	72
246"	20	44	30	72
252"	19	44	30	69
258"	18	42	30	67
264"	17	40	29	67
270"	17	40	27	63
276"	17	40	26	62
282"	17	38	25	62
288"	17	36	26	59

ADVANCED SCREEN ROLL-UP SYSTEM

ADVANCED HURRICANE TECHNOLOGY
6063 JAMES LANE, NAPLES, FL 34109
PHONE: 239.260.0020; FAX: 239.260.0023
WWW.AHT-USA.NET

#	DATE	REVISIONS

TKU Engineering, LLC.
1435 AUTUMN CREEK DRIVE, RIVERVIEW, FL 33569
PH: 813.404.7649; EM: TKUENGINEERING@VERIZON.NET
CERTIFICATE OF AUTHORIZATION NUMBER: 28582

DATE:	DRAWN BY:	SCALE:	PROJ. #:
4/30/15	TKU	N.T.S.	15-0803

THIS IS TO CERTIFY THAT, TO THE BEST OF MY KNOWLEDGE THESE PLANS & SPECIFICATIONS ARE IN COMPLIANCE WITH THE BUILDING CODE REQUIREMENTS.

STATE OF FLORIDA PROFESSIONAL ENGINEER
TREVOR JOHNSON
No 65624
LICENSE
Trevor Johnson
4-30-15

ROPE SCREEN DIRECT MOUNT

MAXIMUM DESIGN PRESSURE OF A SIDE RAIL SCREEN FOR ANY LENGTH ATTACHED WITH 5/16" ELCO ULTRACON HFH @ 6" O.C.

SCREEN SPANS UP TO	CONC. & FILLED CMU (3500 PSI)	CONC. & FILLED CMU (2500 PSI)	HOLLOW CMU (1800 PSI)	TIMBER (S.G. = .55)
	PRESSURE (PSF)	PRESSURE (PSF)	PRESSURE (PSF)	PRESSURE (PSF)
90"	75	75	49	75
96"	75	75	46	75
102"	75	75	43	75
108"	75	75	41	74
114"	75	75	38	70
120"	75	75	36	66
126"	75	75	35	62
132"	75	75	32	59
138"	75	75	31	56
144"	75	75	29	53
150"	75	72	29	51
156"	75	68	27	48
162"	75	66	26	47
168"	75	64	25	45
174"	74	61	24	43
180"	72	60	23	41
186"	68	57	22	40
192"	67	55	22	38
198"	64	53	21	37
204"	63	51	20	36
210"	61	50	20	35
216"	59	49	19	34
222"	58	47	19	33
228"	56	46	18	32
234"	54	45	18	32
240"	52	44	18	31
246"	52	42	17	30
252"	51	41	17	29
258"	49	40	16	28
264"	48	39	16	27
270"	47	39	15	27
276"	46	38	15	26
282"	45	37	15	26
288"	44	36	14	25

ROPE SCREEN DIRECT MOUNT

MAXIMUM DESIGN PRESSURE OF A SIDE RAIL SCREEN FOR ANY LENGTH ATTACHED WITH 5/16" ELCO ULTRACON HFH @ 4" O.C.

SCREEN SPANS UP TO	CONC. & FILLED CMU (3500 PSI)	CONC. & FILLED CMU (2500 PSI)	HOLLOW CMU (1800 PSI)	TIMBER (S.G. = .55)
	PRESSURE (PSF)	PRESSURE (PSF)	PRESSURE (PSF)	PRESSURE (PSF)
90"	75	75	75	75
96"	75	75	73	75
102"	75	75	68	75
108"	75	75	63	75
114"	75	75	60	75
120"	75	75	57	75
126"	75	75	54	75
132"	75	75	51	75
138"	75	75	48	75
144"	75	75	47	75
150"	75	75	44	75
156"	75	75	43	75
162"	75	75	41	75
168"	75	75	40	72
174"	75	75	38	69
180"	75	75	37	67
186"	75	75	36	64
192"	75	75	34	62
198"	75	75	33	60
204"	75	75	32	58
210"	75	75	31	57
216"	75	75	30	54
222"	75	74	29	53
228"	75	72	28	52
234"	75	71	28	50
240"	75	69	27	49
246"	75	67	27	47
252"	75	65	26	47
258"	75	64	25	46
264"	75	63	25	45
270"	74	61	24	44
276"	72	60	23	42
282"	71	59	23	42
288"	69	57	22	41

ROPE SCREEN DIRECT MOUNT

MAXIMUM DESIGN PRESSURE OF A SIDE RAIL SCREEN FOR ANY LENGTH ATTACHED WITH 1/4"-14 ELCO DRIL-FLEX HWH TO ALUMINUM OR STEEL

SCREEN SPANS UP TO	@ 6" O.C. 1/8" AL/ST	@ 6" O.C. 1/4" AL/ST	@ 4" O.C. 1/8" AL/ST	@ 4" O.C. 1/4" AL/ST
	PRESSURE (PSF)	PRESSURE (PSF)	PRESSURE (PSF)	PRESSURE (PSF)
90"	65	75	75	75
96"	61	75	75	75
102"	58	75	75	75
108"	54	75	75	75
114"	51	75	75	75
120"	48	75	75	75
126"	46	75	71	75
132"	44	75	67	75
138"	42	75	65	75
144"	40	75	63	75
150"	38	75	59	75
156"	37	75	57	75
162"	36	75	55	75
168"	34	73	53	75
174"	33	71	51	75
180"	32	67	49	75
186"	30	66	47	75
192"	29	63	46	75
198"	29	61	44	75
204"	28	59	43	75
210"	27	57	42	75
216"	26	56	41	75
222"	25	54	39	75
228"	25	52	38	75
234"	24	51	37	75
240"	24	50	37	75
246"	23	49	36	75
252"	22	47	35	75
258"	22	46	34	73
264"	21	45	33	71
270"	21	44	32	70
276"	20	43	32	68
282"	20	42	31	67
288"	19	41	30	66

ROPE SCREEN DIRECT MOUNT

MAXIMUM DESIGN PRESSURE OF A SIDE RAIL SCREEN FOR ANY LENGTH ATTACHED WITH 5/16"-24 ELCO DRIL-FLEX HWH TO ALUMINUM OR STEEL

SCREEN SPANS UP TO	@ 6" O.C. 1/8" AL/ST	@ 6" O.C. 1/4" AL/ST	@ 4" O.C. 1/8" AL/ST	@ 4" O.C. 1/4" AL/ST
	PRESSURE (PSF)	PRESSURE (PSF)	PRESSURE (PSF)	PRESSURE (PSF)
90"	67	75	75	75
96"	62	75	75	75
102"	58	75	75	75
108"	55	75	75	75
114"	52	75	75	75
120"	50	75	75	75
126"	47	75	73	75
132"	44	75	69	75
138"	43	75	66	75
144"	40	75	63	75
150"	39	75	60	75
156"	37	75	58	75
162"	36	75	55	75
168"	34	75	54	75
174"	33	75	51	75
180"	32	75	50	75
186"	31	73	48	75
192"	30	70	46	75
198"	29	69	45	75
204"	29	66	44	75
210"	27	64	42	75
216"	26	63	41	75
222"	25	61	40	75
228"	25	59	39	75
234"	24	58	38	75
240"	24	56	37	75
246"	24	55	36	75
252"	23	53	35	75
258"	22	52	35	75
264"	22	51	34	75
270"	21	50	33	75
276"	21	49	32	75
282"	20	48	32	75
288"	20	47	31	73

#	DATE	REVISIONS

ADVANCED HURRICANE TECHNOLOGY
6063 JAMES LANE, NAPLES, FL 34109
PHONE: 239.260.0020; FAX: 239.260.0023
WWW.AHT-USA.NET

ADVANCED SCREEN ROLL-UP SYSTEM

TKJ Engineering, LLC.
1835 AUTUMN CREEK DRIVE, RIVERVIEW, FL 33569
TEL: 813.404.7649; EM.: TKJENGINEERING@VERIZON.NET
CERTIFICATE OF AUTHORIZATION NUMBER: 28582

DATE:	DRAWN BY:	SCALE:	PROJ. #:
4/30/15	TKJ	N.T.S.	15-0803

THIS IS TO CERTIFY THAT, TO THE BEST OF MY KNOWLEDGE, THESE PLANS & SPECIFICATIONS ARE IN COMPLIANCE WITH THE BUILDING CODE REQUIREMENTS

TREVOR JOHNSON
No 65624
STATE OF FLORIDA
PROFESSIONAL ENGINEER
4-30-15
THE JOHNSON
FLORIDA P.E. # 65624