MIAMI-DADE COUNTY
PRODUCT CONTROL SECTION
11805 SW 26 Street, Room 208
Miami, Florida 33175-2474
T (786) 315-2590 F (786) 315-2599
www.miamidade.gov/building

DEPARTMENT OF REGULATORY AND ECONOMIC RESOURCES (RER)
BOARD AND CODE ADMINISTRATION DIVISION

NOTICE OF ACCEPTANCE (NOA)

Lawson Industries, Inc.
8501 NW 90 Street
Medley, FL 33166

SCOPE:

This NOA is being issued under the applicable rules and regulations governing the use of construction materials. The documentation submitted has been reviewed and accepted by Miami-Dade County RER - Product Control Section to be used in Miami Dade County and other areas where allowed by the Authority Having Jurisdiction (AHJ).

This NOA shall not be valid after the expiration date stated below. The Miami-Dade County Product Control Section (In Miami-Dade County) and/ or the AHJ (in areas other than Miami-Dade County) reserve the right to have this product or material tested for quality assurance purposes. If this product or material fails to perform in the accepted manner, the manufacturer will incur the expense of such testing and the AHJ may immediately revoke, modify, or suspend the use of such product or material within their jurisdiction. RER reserves the right to revoke this acceptance if it is determined by Miami-Dade County Product Control Section that this product or material fails to meet the requirements of the applicable building code.

This product is approved as described herein, and has been designed to comply with the Florida Building Code, including the High Velocity Hurricane Zone.

DESCRIPTION: Series "HS-8800 (Fin Frame)" Aluminum Horizontal Sliding Window – L.M.I.

APPROVAL DOCUMENT: Drawing No. **L8800-0801 Rev F** titled "HS-8800 Horizontal Rolling Fin Impact Window", sheets 1 through 5 of 5, dated 04/08/08 and last revised on SEP 06, 2023, prepared by manufacturer and signed and sealed by Thomas J. Sotos, P.E. bearing Product Control Renewal stamp with the Notice of Acceptance number and expiration date by the Miami–Dade County Product Control Section.

MISSILE IMPACT RATING: Large and Small Missile Impact Resistant

LABELING: Each unit shall bear a permanent label with the manufacturer's name or logo, city, state, series, and following statement: "Miami-Dade County Product Control Approved", unless otherwise noted herein.

RENEWAL of this NOA shall be considered after a renewal application has been filed and there has been no change in the applicable building code negatively affecting the performance of this product.

TERMINATION of this NOA will occur after the expiration date or if there has been a revision or change in the materials, use, and/ or manufacture of the product or process. Misuse of this NOA as an endorsement of any product, for sales, advertising or any other purposes shall automatically terminate this NOA. Failure to comply with any section of this NOA shall be cause for termination and removal of NOA.

ADVERTISEMENT: The NOA number preceded by the words Miami-Dade County, Florida, and followed by the expiration date may be displayed in advertising literature. If any portion of the NOA is displayed, then it shall be done in its entirety.

INSPECTION: A copy of this entire NOA shall be provided to the user by the manufacturer or its distributors and shall be available for inspection at the job site at the request of the Building Official.

This NOA **revises & renews NOA No. 20-0813.05** and consists of this page 1 and evidence pages E-1, E-2, E-3 and E-4, as well as approval document mentioned above.

The submitted documentation was reviewed by **Ishaq I. Chanda, P.E.**

MIAMI-DADE COUNTY APPROVED

Ishaq I. Chanda

Lawson Industries, Inc.

NOTICE OF ACCEPTANCE: EVIDENCE SUBMITTED

1. EVIDENCE SUBMITTED UNDER PREVIOUS NOA's

A. DRAWINGS

1. Manufacturer's die drawings and sections.
(Submitted under NOA No. 08-0701.03)

2. Drawing No **L8800-0801**, titled "HS-8800 Horizontal Rolling Fin Impact Window", sheets 1 through 5 of 5, dated 04/08/08, with revision "**D**" dated 11/01/17, prepared by manufacturer, and signed and sealed by Thomas J. Sotos, P.E.
(Submitted under NOA No. 17-1212.14)

B. TESTS

1. Test reports on: 1) Air Infiltration Test, per FBC, TAS 202-94
2) Uniform Static Air Pressure Test, Loading per FBC, TAS 202-94
3) Water Resistance Test, per FBC, TAS 202-94
4) Forced Entry Test, per FBC 2411.3.2.1, and TAS 202-94
along with marked-up drawings and installation diagram of an aluminum horizontal sliding window, prepared by Hurricane Engineering & Testing, Inc., Test Report No. **HETI-07-4391**, dated 02/28/08, signed and sealed by Candido F. Font, P.E.
(Submitted under NOA No.08-0701.03)

2. Test reports on: 1) Large Missile Impact Test per FBC, TAS 201-94
2) Cyclic Wind Pressure Loading per FBC, TAS 203-94
along with marked-up drawings and installation diagram of aluminum horizontal sliding windows, all prepared by Hurricane Engineering & Testing, Inc., Test Reports No.'s: **HETI-07-4392**, dated 01/15/08; **HETI-07-4393**, dated 01/15/08; **HETI-07-4395**, dated 01/15/08; **HETI-07-4394**, dated 02/28/08 and **HETI-08-2039**, dated 01/30/08; all signed and sealed by Candido F. Font, P.E.
(Submitted under NOA No.08-0701.03)

C. CALCULATIONS

1. Anchor verification calculations and structural analysis, complying with FBC, dated 06/20/08, prepared by manufacturer, signed and sealed by Thomas J. Sotos, P.E.
(Submitted under NOA No.08-0701.03)

2. Glazing complies with **ASTM E1300-04/09**

D. QUALITY ASSURANCE

1. Miami-Dade Department of Regulatory and Economic Resources (RER).

Ishaq I. Chanda

Ishaq I. Chanda, P.E.
Product Control Unit Supervisor
NOA No. 23-0907.03
Expiration Date: October 09, 2028
Approval Date: October 05, 2023

NOTICE OF ACCEPTANCE: EVIDENCE SUBMITTED

1. EVIDENCE SUBMITTED UNDER PREVIOUS NOA's (CONTINUED)

E. MATERIAL CERTIFICATIONS

1. Notice of Acceptance No. **17-1114.14** issued to **Kuraray America, Inc.** for their "**Trosifol® Ultraclear, Clear and Color PVB Glass Interlayers**" dated 01/18/18, expiring on 07/08/19.

2. Notice of Acceptance No. **17-0712.05** issued to **Eastman Chemical Company (MA)** for their "**Saflex Clear and Color Glass Interlayers**" dated 09/07/17, expiring on 05/21/21.

F. STATEMENTS

1. Statement letter of conformance, complying with **FBC 6th Edition (2017)**, and of "No financial interest" dated November17, 2017, issued by the manufacturer, signed and sealed by Thomas J. Sotos, P.E.
(Submitted under previous NOA No. 17-1212.14)

2. Statement letter dated 01/22/18 of the editorial drawing changes issued by Lawson Inc., signed by Nelson Erazo, Senior Design Engineer.
(Submitted under previous NOA No. 17-1212.14)

3. Department of State Certification of **LAWSON INDUSTRIES, INC.** as a for profit corporation, active and organized under the laws of the State of Florida, dated 04/11/14 and filed at the Secretary of State.
(Submitted under NOA No. 14-0908.13)

4. Laboratory compliance letter for Test Reports No. **HETI-07-4391, HETI-07-4392, HETI-07-4393, HETI-07-4394, HETI-07-4395** and **HETI-08-2039**, issued by Hurricane Engineering & Testing, Inc., dated 01/15/08 through 02/28/08, all signed and sealed by Candido F. Font, P.E.
(Submitted under NOA No. 08-0701.03)

G. OTHERS

1. Notice of Acceptance No. **17-1212.14**, issued to Lawson Industries, Inc. for their Series "HS-8800 Fin Frame" Aluminum Horizontal Sliding Window – L.M.I., approved on 02/01/18 and expiring on 10/09/18.

Ishaq I. Chanda

Ishaq I. Chanda, P.E.
Product Control Unit Supervisor
NOA No. 23-0907.03
Expiration Date: October 09, 2028
Approval Date: October 05, 2023

NOTICE OF ACCEPTANCE: EVIDENCE SUBMITTED

2. EVIDENCE SUBMITTED under previous approval

A. DRAWINGS

1. Drawing No **L8800-0801**, titled "HS-8800 Horizontal Rolling Fin Impact Window", sheets 1 through 5 of 5, dated 04/08/08, with revision "**E**" dated 07/31/20, prepared by manufacturer, and signed and sealed by Thomas J. Sotos, P.E..

B. TESTS

1. None

C. CALCULATIONS

1. None.

D. QUALITY ASSURANCE

1. Miami-Dade Department of Regulatory and Economic Resources (RER)

E. MATERIAL CERTIFICATIONS

1. Notice of Acceptance No. **19-0305.02** issued to **Kuraray America, Inc.** for their "**Trosifol® Ultraclear, Clear and Color PVB Glass Interlayers**" dated 05/09/19, expiring on 07/08/24.

2. Notice of Acceptance No. **20-0622.01** issued to **Eastman Chemical Company (MA)** for their "**Saflex PVB Clear and Color Glass Interlayers**" dated 08/06/20, expiring on 05/21/21.

F. STATEMENTS

1. Statement letter of conformance, complying with **FBC 7th Edition (2020)**, dated August 03, 2020, issued by the manufacturer, signed and sealed by Thomas J. Sotos, P.E.

G. OTHERS

1. Notice of Acceptance No. **18-0808.06**, issued to Lawson Industries, Inc. for their Series "HS-8800 Fin Frame" Aluminum Horizontal Sliding Window – L.M.I., approved on 09/20/18 and expiring on 10/09/23.

Ishaq I. Chanda

Ishaq I. Chanda, P.E.
Product Control Unit Supervisor
NOA No. 23-0907.03
Expiration Date: October 09, 2028
Approval Date: October 05, 2023

NOTICE OF ACCEPTANCE: EVIDENCE SUBMITTED

4. NEW EVIDENCE SUBMITTED

A. DRAWINGS

1. Drawing No. **L8800-0801 Rev F** titled "HS-8800 Horizontal Rolling Fin Impact Window", sheets 1 through 5 of 5, dated 04/08/08 and last revised on SEP 06, 2023, prepared by manufacturer and signed and sealed by Thomas J. Sotos, P.E.

Note: The revision consists of addition of addition of Quanex: Super/ Duraseal spacers.

B. TESTS

1. Test reports on: 1) Air Infiltration Test, per FBC, TAS 202-94
2) Uniform Static Air Pressure Test, Loading per FBC, TAS 202-94
3) Water Resistance Test, per FBC, TAS 202-94
4) Large Missile Impact Test per FBC, TAS 201-94
5) Cyclic Wind Pressure Loading per FBC, TAS 203-94

along with marked-up drawings and installation diagram of an aluminum horizontal sliding window, prepared by Hurricane Engineering & Testing, Inc., Test Report No. **HETI-23-0849**, dated 07/24/23, signed and sealed by Ram N. Tewari, P.E.

C. CALCULATIONS

1. None.

D. QUALITY ASSURANCE

1. Miami-Dade Department of Regulatory and Economic Resources (RER)

E. MATERIAL CERTIFICATIONS

1. Notice of Acceptance No. **19-0305.02** issued to **Kuraray America, Inc.** for their "**Trosifol® Ultraclear, Clear and Color PVB Glass Interlayers**" dated 05/09/19, expiring on 07/08/24.

2. Notice of Acceptance No. **23-0713.18** issued to **Eastman Chemical Company (MA)** for their "**Saflex PVB Clear and Color Glass Interlayers**", expiring on 05/21/26.

F. STATEMENTS

1. Statement letter of conformance, complying with **FBC 8th Edition (2023)**, dated 09/26/23, issued by the manufacturer, signed and sealed by Thomas J. Sotos, P.E.

G. OTHERS

1. This NOA **revises & renews NOA No. 20-0813.05,** updates to FBC 2023, expiring 10/09/28**.**

2. RER Test proposal #**23-0461R** dated 06/16/23, signed by Manny Perez, P.E.

Ishaq I. Chanda

Ishaq I. Chanda, P.E.
Product Control Unit Supervisor
NOA No. 23-0907.03
Expiration Date: October 09, 2028
Approval Date: October 05, 2023

General Notes:

1.) THIS WINDOW SYSTEM IS DESIGNED AND TESTED TO COMPLY WITH THE REQUIREMENTS OF THE FLORIDA BUILDING CODE (2020-7th Edition & 2023-8th Edition) INCLUDING HIGH VELOCITY HURRICANE ZONE (HVHZ) AND ASTM 1300-98. THIS PRODUCT IS IMPACT RESISTANT AND DOES NOT REQUIRE SHUTTERS.

2.) 2 X WOOD BUCKS SHALL BE INSTALLED AND ANCHORED SO THAT THE BUILDING RESISTS THE SUPERIMPOSED LOADS IN ACCORDANCE WITH THE REQUIREMENTS OF FLORIDA BUILDING CODE & TO BE REVIEWED BY BUILDING OFFICIAL.

3.) ANCHORS SHOWN ABOVE ARE AS PER TEST UNITS. ON CENTER (O.C.) ANCHOR SPACINGS WILL VARY WITH UNIT DIMENSIONS, AND THE NUMBER OF ANCHORS REQUIRED, AS SPECIFIED ON THE LOAD TABLES.

4.) ANCHOR CONDITIONS NOT DESCRIBED IN THESE DRAWING'S ARE TO BE ENGINEERED ON A SITE SPECIFIC BASIS, UNDER SEPARATE APPROVAL AND TO BE REVIEWED BY BUILDING OFFICIAL.

5.) XO or OX WINDOWS ARE QUALIFIED FOR USE WITH SINGLE GLAZE LAMINATED GLASS TYPES TABULATED HEREIN (SEE SHEET #4).

6.) XO or OX WINDOWS ARE QUALIFIED FOR USE WITH DOUBLE GLAZE LAMINATED INSULATED GLASS TYPES TABULATED HEREIN (SEE SHEET #4).

7.) SEE SHEET #3 FOR LOCK DETAILS & OPTIONS.

8.) SEE SHEET #1 FOR GLAZING DETAILS & OPTIONS. (REFER TO SHEETS #4, FOR MAX. DESIGN PRESSURES.

9.) WOOD OPENINGS SHALL BE PROTECTED WITH AN APPROVED MOISTURE RESISTANT WEATHERBARRIER (BY OTHERS), PRIOR TO WINDOW INSTALLATION. (SEE SHEET #3 FOR INSTALLATION DETAIL)

10.) MATERIALS INCLUDING BUT NOT LIMITED TO STEEL SCREWS, THAT COME INTO CONTACT WITH OTHER DISSIMILAR MATERIALS SHALL MEET THE REQUIREMENTS OF FLORIDA BUILDING CODE SECTION 2003.8.4

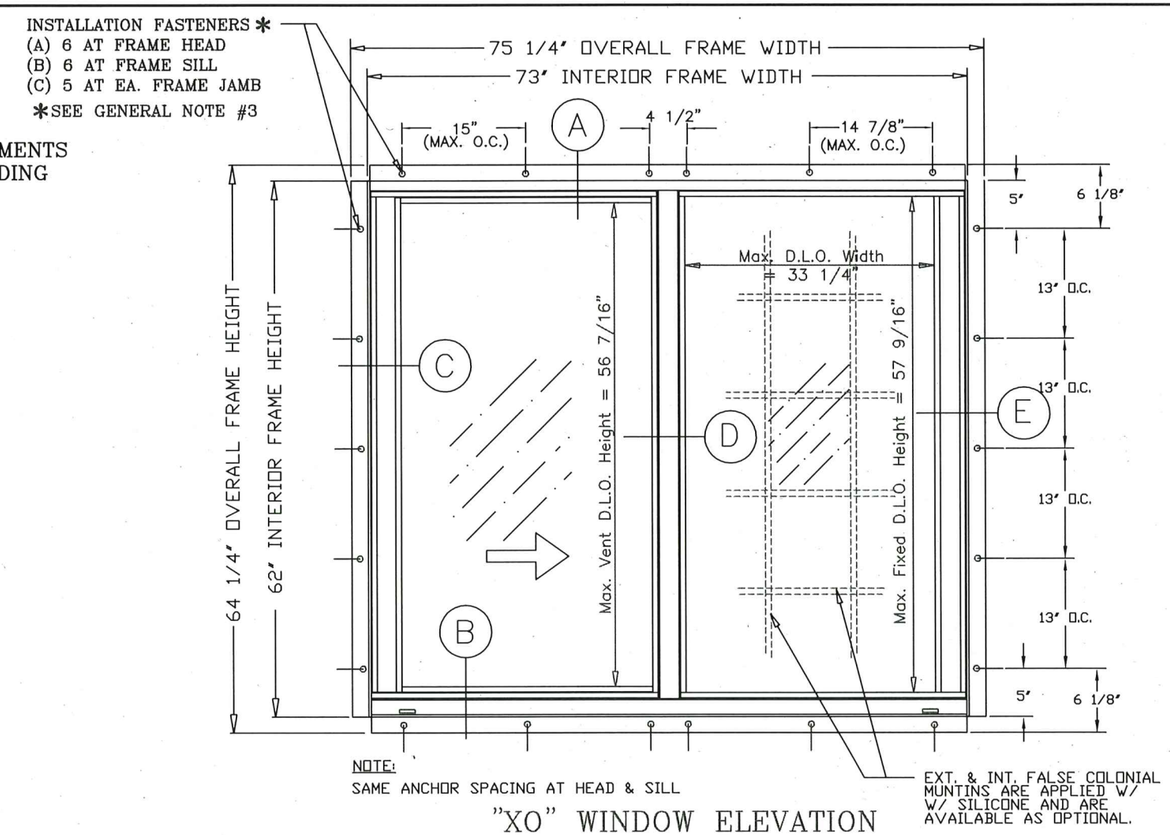

"XO" WINDOW ELEVATION
("OX" REVERSED)

SERIES-8800 HORIZONTAL SLIDING IMPACT WINDOW - FIN FRAME

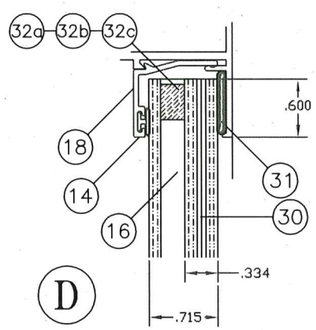

0.125" TEMPERED GLASS (OUTBOARD)
*(QUALIFIED FOR SMALL MISSILE IMPACT)
0.125" ANN. GLASS (INBOARD)
LAMINATED w/ 0.090" PVB &
INSULATED w/ 0.250" AIR SPACE
0.340" TOTAL GLASS THICKNESS

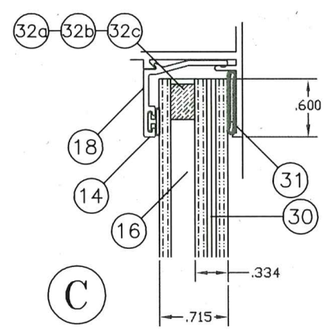

0.125" ANN. GLASS (OUTBOARD)
(NOT QUALIFIED FOR SMALL MISSILE IMPACT)
0.125" ANN. GLASS (INBOARD)
LAMINATED w/ 0.090" PVB &
INSULATED w/ 0.250" AIR SPACE
0.340" TOTAL GLASS THICKNESS

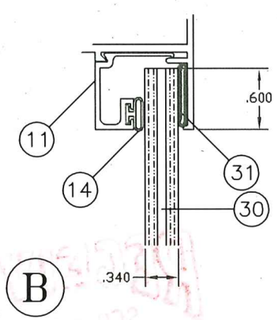

0.125" H.S. GLASS
LAMINATED w/ 0.090" PVB
0.340" TOTAL GLASS THICKNESS

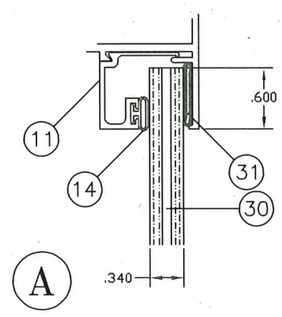

0.125" ANN. GLASS
LAMINATED w/ 0.090" PVB
0.340" TOTAL GLASS THICKNESS

PRODUCT RENEWED
as complying with the Florida Building Code
NOA-No. 23-0907.03
Expiration Date 10/09/2028
By Ishaq I. Chanda
Miami-Dade Product Control

(30) **Laminate Types & Options**
1) Trosifol PVB by: Kuraray America, Inc.
2) Saflex PVB by: Eastman Chemical Company

(32) **Insulated Spacer Types & Options**
32 a) "TrueSeal" Swiggle Seal
32 b) "Quanex" SuperSpacer w/ Isomelt M
32 c) "Quanex" Duraseal

GLAZING DETAILS, OPTIONS AND DESCRIPTION

(NOTE: SEE DP CHARTS AT SHEET 4 OF 5)

LAMSON INDUSTRIES, INC.
8501 N.W. 90 ST.
MEDLEY, FLORIDA 33166
PH No. (305) 696-8660

MANUFACTURER OF QUALITY ALUMINUM WINDOWS AND GLASS DOORS

HS-8800 HORIZONTAL ROLLING FIN IMPACT WINDOW
APPROVED ELEVATION, GLAZING DETAILS AND GENERAL NOTES

Revision Notes:
B. Revised to Comply w/ 2010 FBC
C. Revised date for the 2014 FBC
D. Revised date for the 2017 FBC
E. Revised date for the 2020 FBC
F. Revised date for the 2023 FBC

Drawn By: N. ERAZO | Date Drawn: 04/08/08
Revised By: N. Erazo | Date Revised: 08/31/23
Revision Level: F | Scale:
Product Reference Number: | Drawing Number: L8800-0801 | Sheet: 1 OF 5 | Revision #:

THOMAS J. SOTOS
PROFESSIONAL ENGINEER
FL LIC. # 55225

THOMAS J. SOTOS LICENSE No 55225 STATE OF FLORIDA PROFESSIONAL ENGINEER

DATE SEP 06 2023

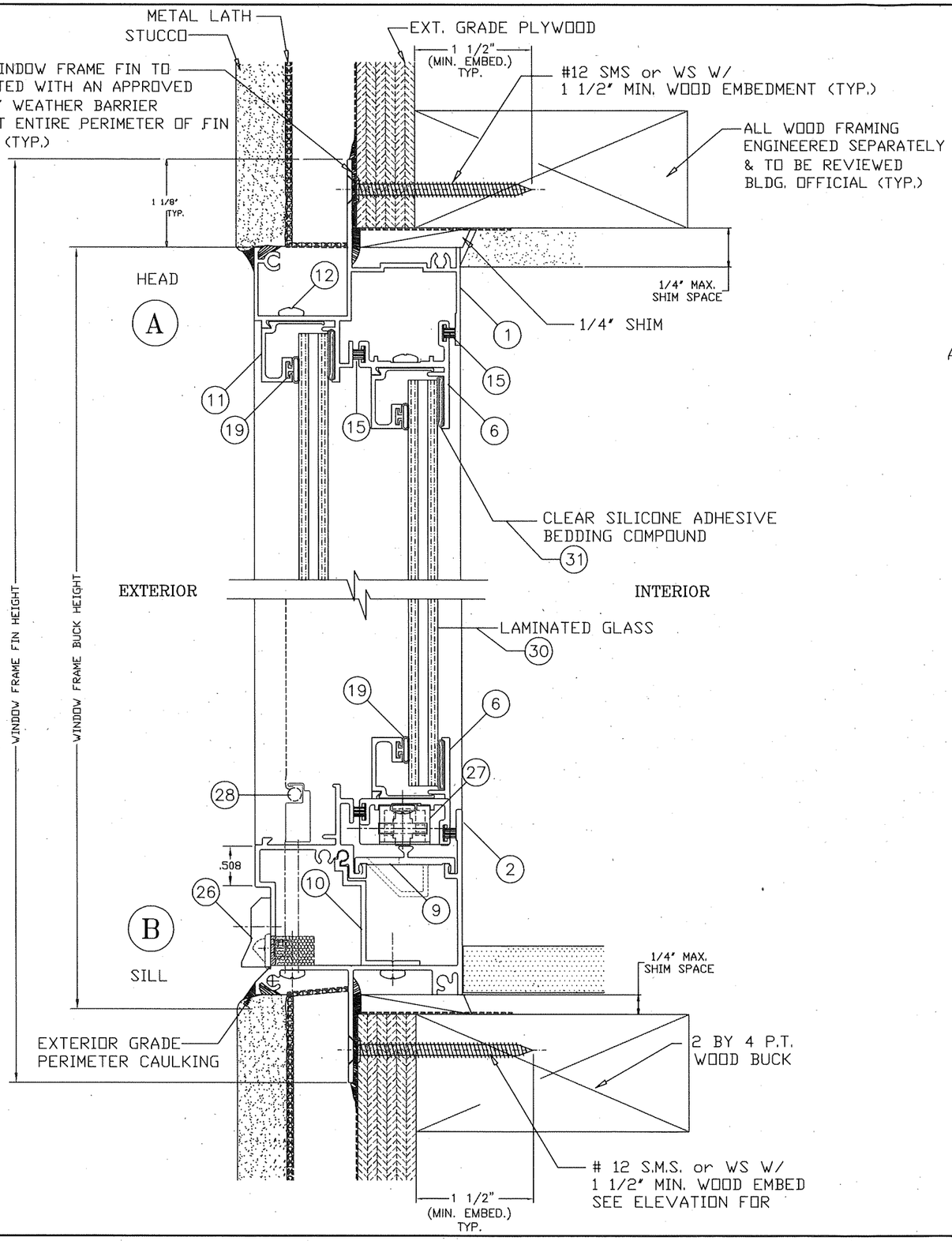

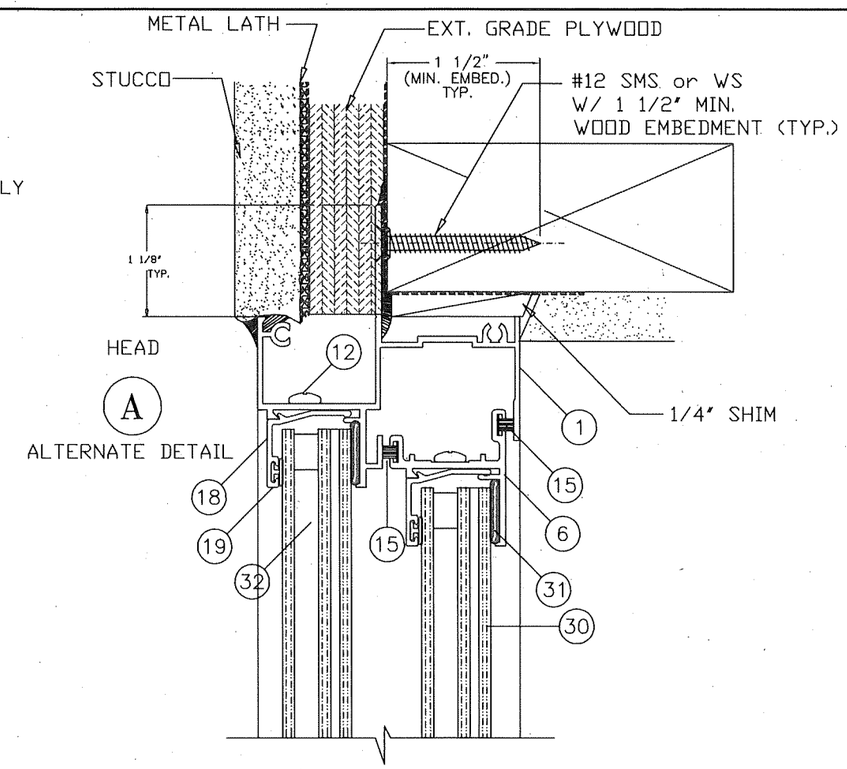

NOTE:
ALL ANCHORS TO BE #12 SMS OR WD. SCREW WITH A MINIMUM OF 1 1/2" PENETRATION INTO WOOD. (REFER TO WINDOW ELEVATIONS ON SHEET 1 FOR MAX. ALLOWABLE ANCHOR SPACING)

* WHEN THE GAP BETWEEN THE WINDOW FRAME AND THE BUCK IS LESS THAN 1/8", SHIMS ARE NOT REQUIRED.

PRODUCT RENEWED
as complying with the Florida Building Code
NOA-No. 23-0907.03
Expiration Date 10/09/2028
By Ishaq I. Chanda
Miami-Dade Product Control

LAWSON INDUSTRIES, INC.
8501 N.W. 90 ST.
MEDLEY, FLORIDA 33166
PH No. (305) 696-8660

MANUFACTURER OF QUALITY ALUMINUM WINDOWS AND GLASS DOORS

HS-8800 HORIZONTAL ROLLING FIN WINDOW
WINDOW VERTICAL CROSS SECTION & DETAILS

Product Reference Number:	Drawing Number: L8800-0801	Sheet: 2 OF 5	Revision #:

Revision Notes:
B. Revised to Comply w/ 2010 FBC
C. Revised date for the 2014 FBC
D. Revised date for the 2017 FBC
E. Revised date for the 2020 FBC
F. Revised date for the 2023 FBC

Drawn By: N. ERAZO	Date Drawn: 04/08/08		
Revised By: N. Erazo	Date Revised: 08/31/23		
Revision Level: F	Scale:		

THOMAS J. SOTOS
PROFESSIONAL ENGINEER
FL LIC. # 55225

THOMAS J. SOTOS LICENSE No 55225 STATE OF FLORIDA PROFESSIONAL ENGINEER

DATE SEP 06 2023

NOTE:
ALL ANCHORS TO BE #12 SMS OR WD. SCREW WITH A MINIMUM OF 1 1/2" PENETRATION INTO WOOD. (REFER TO WINDOW ELEVATIONS ON SHEET 1 FOR MAX. ALLOWABLE ANCHOR SPACING)

* WHEN THE GAP BETWEEN THE WINDOW FRAME AND THE BUCK IS LESS THAN 1/8", SHIMS ARE NOT REQUIRED.

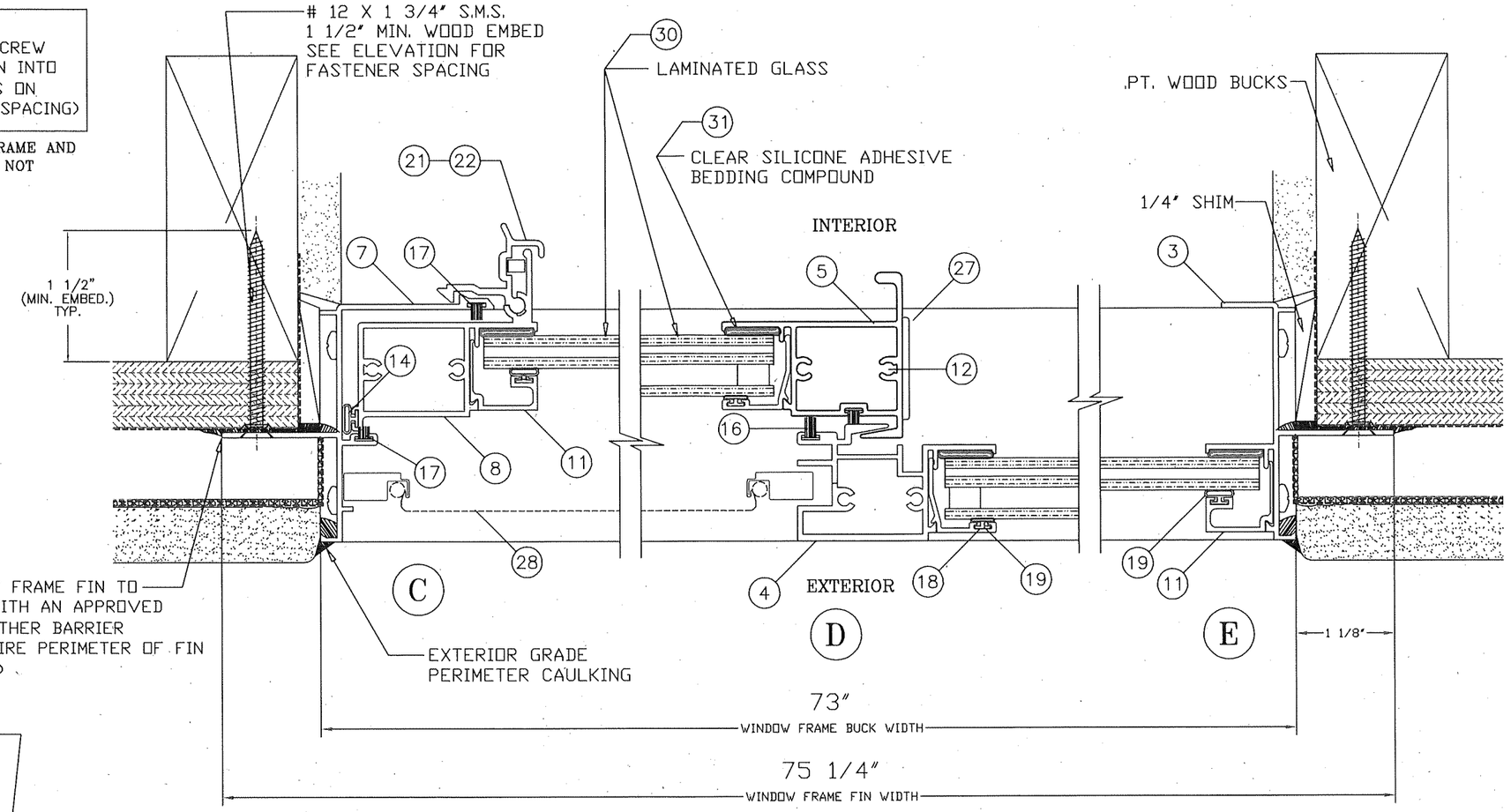

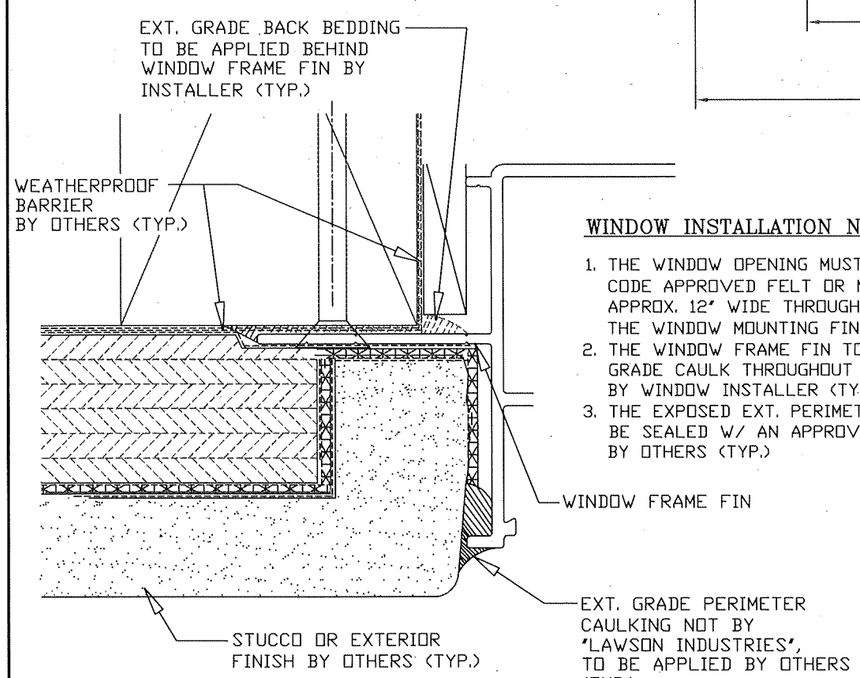

WINDOW INSTALLATION DETAIL

WINDOW INSTALLATION NOTES:

1. THE WINDOW OPENING MUST BE PROTECTED WITH A CODE APPROVED FELT OR MOISTURE/WEATHER BARRIER, APPROX. 12" WIDE THROUGHOUT ENTIRE PERIMETER OF THE WINDOW MOUNTING FIN. (NOT BY LAWSON INDUSTRIES)
2. THE WINDOW FRAME FIN TO BE BACK-BEDDED W/ AN EXT. GRADE CAULK THROUGHOUT THE ENTIRE PERIMETER OF FIN BY WINDOW INSTALLER (TYP.)
3. THE EXPOSED EXT. PERIMETER OF THE WINDOW FRAME TO BE SEALED W/ AN APPROVED EXTERIOR GRADE CAULK BY OTHERS (TYP.)

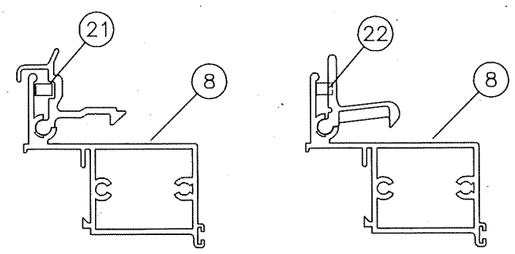

Notes

1. BOTH EXTRUDED ALUMINUM AND MOLDED NYLON LIFT HANDLE LOCKS ARE QUALIFIED FOR USE ON ALL WINDOWS.
2. ONLY TWO (2) LOCKS ARE REQUIRED PER EACH VENT.

LOCK OR LOCK OPTIONS

PRODUCT RENEWED
as complying with the Florida Building Code
NOA-No. 23-0907.03
Expiration Date 10/09/2028
By Ishaq I. Chanda
Miami-Dade Product Control

LAWSON INDUSTRIES, INC.
8501 N.W. 90 ST.
MEDLEY, FLORIDA 33166
PH No. (305) 696-8660

MANUFACTURER OF QUALITY ALUMINUM WINDOWS AND GLASS DOORS

HS-8800 HORIZONTAL ROLLING FIN IMPACT WINDOW
CROSS SECTION DETAILS, LOCK OPTIONS AND FRAME INSTALLATION DETAIL

Revision Notes:
B. Revised to Comply w/ 2010 FBC
C. Revised date for the 2014 FBC
D. Revised date for the 2017 FBC
E. Revised date for the 2020 FBC
F. Revised date for the 2023 FBC

Drawn By: N. ERAZO	Date Drawn: 04/08/08	Product Reference Number:	Drawing Number: L8800-0801
Revised By: N. Erazo	Date Revised: 08/31/23	Sheet: 3 OF 5	Revision #:
Revision Level: F	Scale:		

THOMAS J. SOTOS
PROFESSIONAL ENGINEER
FL. LIC. # 55225

THOMAS J. SOTOS
LICENSE No 55225
STATE OF FLORIDA
PROFESSIONAL ENGINEER

DATE SEP 06 2023

HS-8800 FIN FRAME WINDOW BILL OF MATERIALS

ITEM #	PART #	REQD.	DESCRIPTION	REMARKS
1	L-7803	1	FIN FRAME HEAD	6063-T6 ALUMINUM
2	L-8801	1	FIN FRAME SILL	6063-T6 ALUMINUM
3	L-7801	1	FIN FRAME FXD. JAMB	6063-T6 ALUMINUM
4	L-7704	1	FRAME FIXED MEETING RAIL	6063-T6 ALUMINUM
5	L-7705	1	VENT MEETING RAIL	6063-T6 ALUMINUM
6	L-7707	1	VENT TOP/BOTTOM RAIL	6063-T6 ALUMINUM
7	L-8802	1	FIN FRAME VENT JAMB	6063-T6 ALUMINUM
8	L-7706	1	VENT JAMB LATCH RAIL	6063-T6 ALUMINUM
9	L-8702	1	FRAME SILL TRACK	6063-T5 ALUMINUM
10	L-8705	1	FRAME SILL RETAINING CLIP	6063-T5 ALUMINUM
11	L-7708	AS REQ'D.	GLAZING BEAD (3/8")	6063-T5 ALUMINUM
12	FS-006	AS REQ'D.	FRAME ASSEMBLY SCREWS	#8 X 3/4" P.H. PHILLIPS
13	FS-040	AS REQD.	INSTALLATION SCREWS	#12 SMS F.H./PHIL.
14	L-7531	AS REQ'D.	VENT JAMB VINYL WTS'P	1/4" DIA. BULB #3033
15	PWS-003	AS REQ'D.	FIN SEAL WEATHERSTRIP	.187" w x .230" h
16	PWS-005	AS REQ'D.	FIN SEAL WEATHERSTRIP	.187" w x .350" h
17	PWS-009	AS REQ'D.	FIN SEAL WEATHERSTRIP	.187" w x .310" h
18	L-7711	AS REQ'D.	GLAZING BEAD (3/4")	6063-T5 ALUMINUM
19	L-7531	AS REQ'D.	BEAD VINYL BULB	1/4" DIA. BULB #3033
20	*	AS REQ'D.	COLONIAL FALSE MUNTIN	ALUMINUM
21	L-7539	2	VENT EXTRUDED LATCH	6063-T5 ALUMINUM
22	HC-057-1	2	VENT MOLDED LATCH	MOLDED NYLON
23	*	1 x LATCH	LATCH SPRING	STAINLESS STEEL
24	*	2	SILL/JAMB JOINT GASKET	1/16" CLOSED CELL FOAM
25	FS-041	2	SILL RAIL ASSEMBLY SCREW	#8 X 2 1/4" P.H./PHIL.
26	HC-044-1	2	WEEP FLAP & BAFFLE	
27	HC-040-1	2	SASH ROLLER & HOUSING	
28	HC-026-1	1	SCREEN FRAME & MESH	
29	*	1	ATTACHMENT SCREW @ CLIP	#8 X 5/8" S.D.S.
30	*	2	LAMINATED GLASS	See Detail @ sheet 1 of 5
31	SM-5504	AS REQ'D.	GLAZING SILICONE	See Detail @ sheet 1 of 5
32 a	'TrueSeal'	AS REQ'D.	Insulated Glass Swiggle Seal	1/4" air space
32 b	'Quanex'	AS REQ'D.	Insulated Glass SuperSpacer	1/4" air space
32 c	'Quanex'	AS REQ'D.	Insulated Glass Duraseal	1/4" air space
33	SM-5504	AS REQ'D.	JOINT SEALANT	
34	*	AS REQ'D.	PERIMETER ACRYLIC CAULK	OSI POLYSEAMSEAL
35	*	1	PRODUCT LABEL	

HS-8800 Impact Horizontal Sliding Window

Configuration: "XO or OX"

	Code	Frame Buck Size		Frame Installation Anchors			Design Load as per Glass Type							
		Width	Height	Head	Each	Total	"A" (Annealed)		"B" (H.S.)		"C" (Ann./Insulated)		"D" (Tem./Insulated)	
	Size	(in)	(in)	Sill	Jamb	Req'd.	P(+)	P(-)	P(+)	P(-)	P(+)	P(-)	P(+)	P(-)
COMMODITY SIZES	12	18.125	25	2	3	10	48.0	48.0	60.0	60.0	60.0	60.0	60.0	60.0
	13	18.125	37.375	2	3	10	48.0	48.0	60.0	60.0	60.0	60.0	60.0	60.0
	14	18.125	49.625	2	4	12	48.0	48.0	60.0	60.0	60.0	60.0	60.0	60.0
	15	18.125	62	2	5	14	48.0	48.0	60.0	60.0	60.0	60.0	60.0	60.0
	H32	25.5	25	3	3	12	48.0	48.0	60.0	60.0	60.0	60.0	60.0	60.0
	H33	25.5	37.375	3	3	12	48.0	48.0	60.0	60.0	60.0	60.0	60.0	60.0
	H34	25.5	49.625	3	4	14	48.0	48.0	60.0	60.0	60.0	60.0	60.0	60.0
	H35	25.5	62	3	5	16	48.0	48.0	60.0	60.0	60.0	60.0	60.0	60.0
	22	36	25	3	3	12	48.0	48.0	60.0	60.0	60.0	60.0	60.0	60.0
	23	36	37.375	3	3	12	48.0	48.0	60.0	60.0	60.0	60.0	60.0	60.0
	24	36	49.625	3	4	14	48.0	48.0	60.0	60.0	60.0	60.0	60.0	60.0
	25	36	62	3	5	16	48.0	48.0	60.0	60.0	60.0	60.0	60.0	60.0
	32	52.125	25	4	3	14	48.0	48.0	60.0	60.0	60.0	60.0	60.0	60.0
	33	52.125	37.375	4	3	14	48.0	48.0	60.0	60.0	60.0	60.0	60.0	60.0
	34	52.125	49.625	4	4	16	48.0	48.0	60.0	60.0	60.0	60.0	60.0	60.0
	35	52.125	62	4	5	18	48.0	48.0	60.0	60.0	60.0	60.0	60.0	60.0
	D22	73	25	6	3	18	48.0	48.0	60.0	60.0	60.0	60.0	60.0	60.0
	D23	73	37.375	6	3	18	48.0	48.0	60.0	60.0	60.0	60.0	60.0	60.0
	D24	73	49.625	6	4	20	48.0	48.0	60.0	60.0	60.0	60.0	60.0	60.0
	D25	73	62	6	5	22	-	-	60.0	60.0	60.0	60.0	60.0	60.0
MODULAR SIZES	2020	23	23	3	3	12	48.0	48.0	60.0	60.0	60.0	60.0	60.0	60.0
	2030	23	35	3	3	12	48.0	48.0	60.0	60.0	60.0	60.0	60.0	60.0
	2040	23	47	3	4	14	48.0	48.0	60.0	60.0	60.0	60.0	60.0	60.0
	2050	23	59	3	5	16	48.0	48.0	60.0	60.0	60.0	60.0	60.0	60.0
	3020	35	23	3	3	12	48.0	48.0	60.0	60.0	60.0	60.0	60.0	60.0
	3030	35	35	3	3	12	48.0	48.0	60.0	60.0	60.0	60.0	60.0	60.0
	3040	35	47	3	4	14	48.0	48.0	60.0	60.0	60.0	60.0	60.0	60.0
	3050	35	59	3	5	16	48.0	48.0	60.0	60.0	60.0	60.0	60.0	60.0
	4020	47	23	4	3	14	48.0	48.0	60.0	60.0	60.0	60.0	60.0	60.0
	4030	47	35	4	3	14	48.0	48.0	60.0	60.0	60.0	60.0	60.0	60.0
	4040	47	47	4	4	16	48.0	48.0	60.0	60.0	60.0	60.0	60.0	60.0
	4050	47	59	4	5	18	48.0	48.0	60.0	60.0	60.0	60.0	60.0	60.0
	5020	59	23	5	3	16	48.0	48.0	60.0	60.0	60.0	60.0	60.0	60.0
	5030	59	35	5	3	16	48.0	48.0	60.0	60.0	60.0	60.0	60.0	60.0
	5040	59	47	5	4	18	48.0	48.0	60.0	60.0	60.0	60.0	60.0	60.0
	5050	59	59	5	5	20	48.0	48.0	60.0	60.0	60.0	60.0	60.0	60.0
	6020	71	23	6	3	18	48.0	48.0	60.0	60.0	60.0	60.0	60.0	60.0
	6030	71	35	6	3	18	48.0	48.0	60.0	60.0	60.0	60.0	60.0	60.0
	6040	71	47	6	4	20	48.0	48.0	60.0	60.0	60.0	60.0	60.0	60.0
	6050	71	59	6	5	22	-	-	60.0	60.0	60.0	60.0	60.0	60.0

Note: (*) WINDOWS WITH GLASS TYPES "C" INSTALLED ABOVE 30FT.
IN THE HVHZ, THE I.G. EXTERIOR LITE SHALL BE TEMPERED.

PRODUCT RENEWED
as complying with the Florida Building Code
NOA-No. 23-0907.03
Expiration Date 10/09/2028
By Ishaq I. Chanda
Miami-Dade Product Control

LAWSON INDUSTRIES, INC.
8501 N.W. 90 ST.
MEDLEY, FLORIDA 33166
PH No. (305) 696-8660

MANUFACTURER OF QUALITY ALUMINUM WINDOWS AND GLASS DOORS

HS-8800 HORIZONTAL ROLLING FIN IMPACT WINDOW

BILL OF MATERIALS, DESIGN LOAD CHART WITH GLASS OPTIONS

Revision Notes:
B. Revised to Comply w/ 2010 FBC
C. Revised date for the 2014 FBC
D. Revised date for the 2017 FBC
E. Revised date for the 2020 FBC
F. Revised date for the 2023 FBC

Drawn By: N. ERAZO | Date Drawn: 04/08/08
Revised By: N. Erazo | Date Revised: 08/31/23
Revision Level: F | Scale:
Product Reference Number: | Drawing Number: LB800-0801 | Sheet: 4 OF 5 | Revision #:

THOMAS J. SOTOS
PROFESSIONAL ENGINEER
FL LIC. # 55225

THOMAS J. SOTOS LICENSE No 55225 STATE OF FLORIDA PROFESSIONAL ENGINEER

DATE SEP 06 2023

FRAME HEAD
L-7803

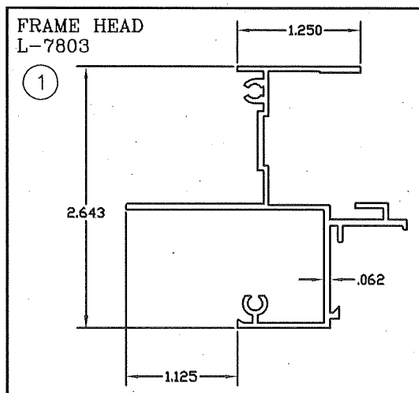

FRAME FIXED JAMB
L-7801

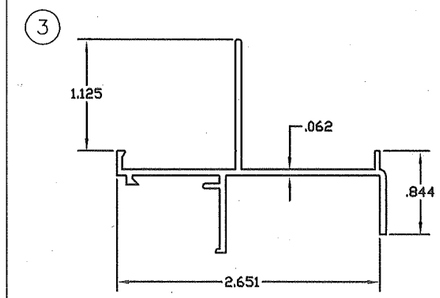

SILL TRACK
L-8702

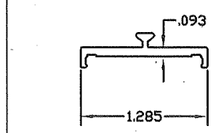

FRAME SILL
L-8801

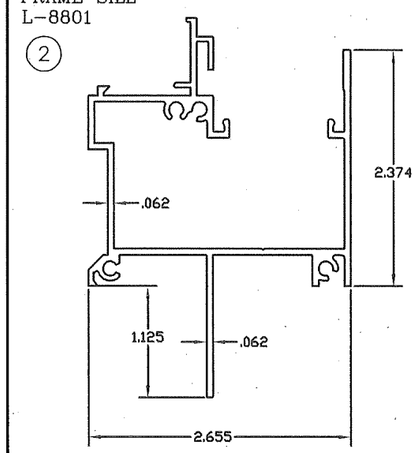

FRAME VENT JAMB
L-8802

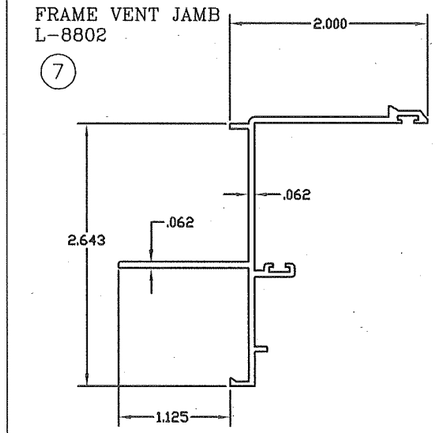

SILL RETAINING CLIP
L-8705

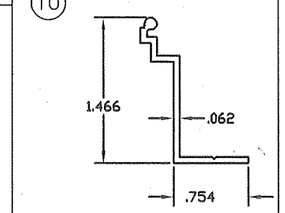

VENT SPRING LATCH
L-7539

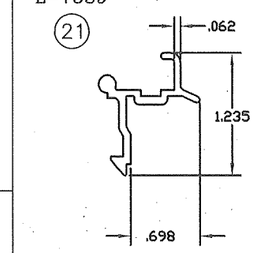

VENT INTERLOCK RAIL
L-7705

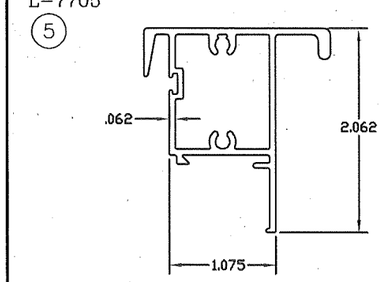

FIXED MEETING RAIL
L-7704

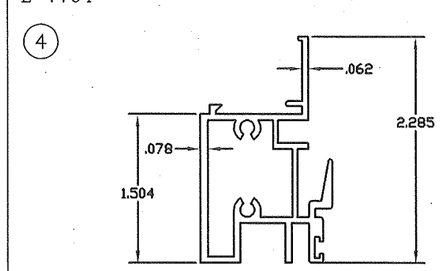

GLAZING BEAD
L-7708

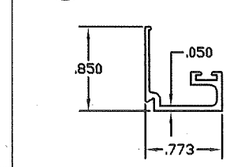

VENT JAMB RAIL
L-7706

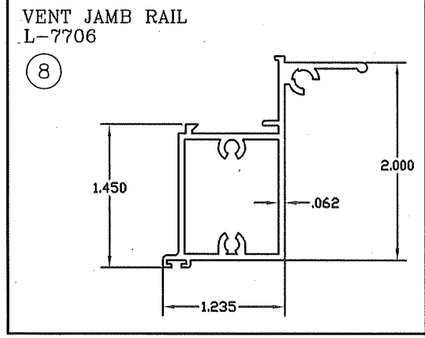

VENT TOP/BOTTOM RAIL
L-7707

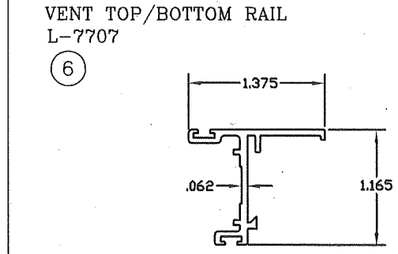

GLAZING BEAD
L-7711

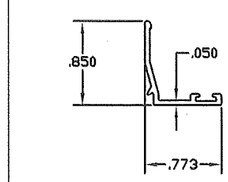

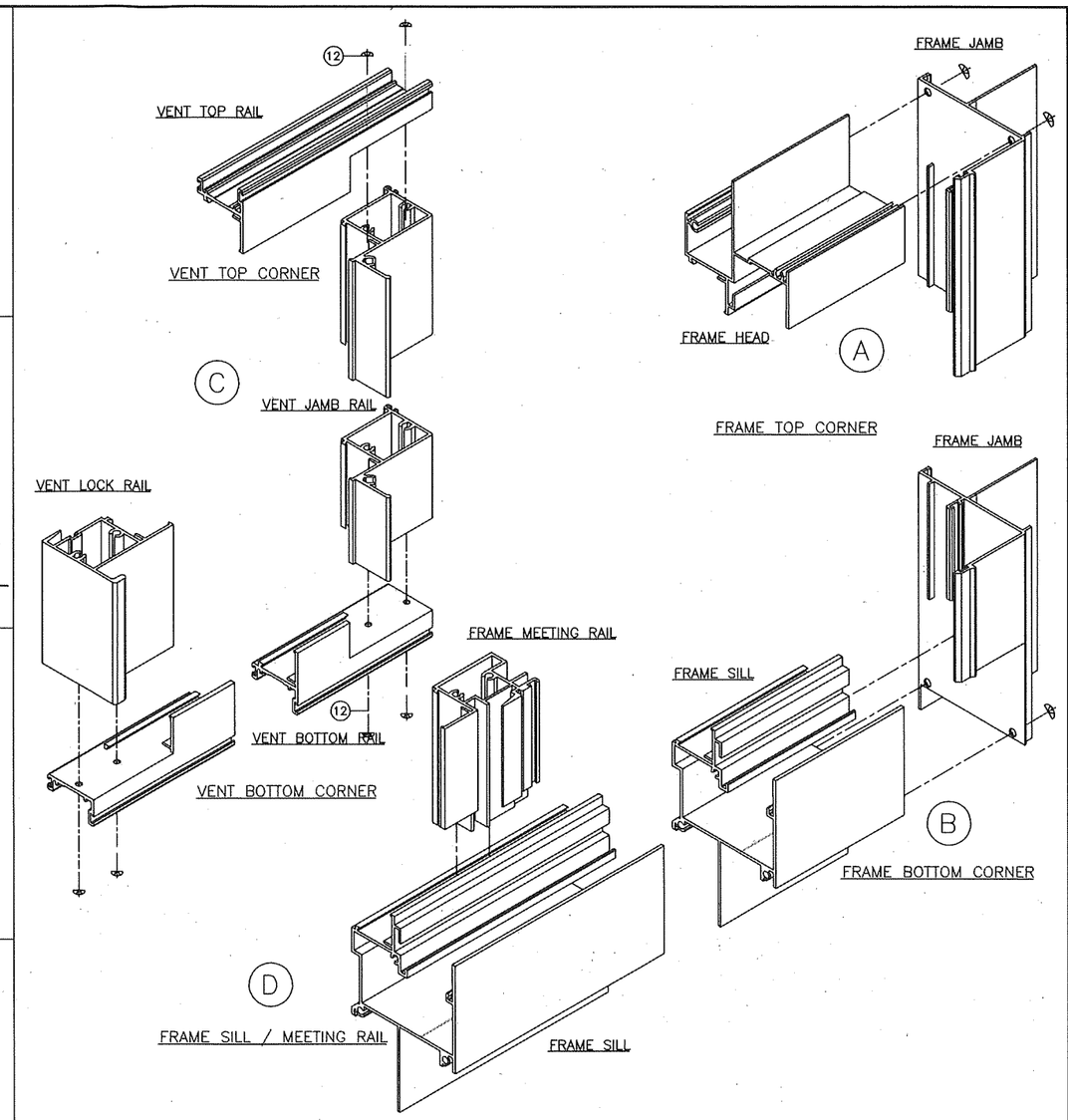

FRAME & SASH CORNER ASSEMBLY DETAILS

LAMSON INDUSTRIES, INC.
8501 N.W. 90 ST.
MEDLEY, FLORIDA 33166
PH No. (305) 696-8660

MANUFACTURER OF QUALITY ALUMINUM WINDOWS AND GLASS DOORS

HS-8800 HORIZONTAL ROLLING FIN IMPACT WINDOW

EXTRUSION DETAILS & CORNER ASSEMBLY DETAILS

Product Reference Number:	Drawing Number: L8800-0801	Sheet: 5 OF 5	Revision #:

Revision Notes:
B. Revised to Comply w/ 2010 FBC
C. Revised date for the 2014 FBC
D. Revised date for the 2017 FBC
E. Revised date for the 2020 FBC
F. Revised date for the 2023 FBC

Drawn By: N. ERAZO	Date Drawn: 04/08/08		
Revised By: N. Erazo	Date Revised: 08/31/23		
Revision Level: F	Scale:		

THOMAS J. SOTOS
PROFESSIONAL ENGINEER
FL LIC. # 55225

THOMAS J. SOTOS
LICENSE No. 55225
STATE OF FLORIDA
PROFESSIONAL ENGINEER

DATE SEP 06 2023