24 GA. & 25 GA. PAN MODELS:

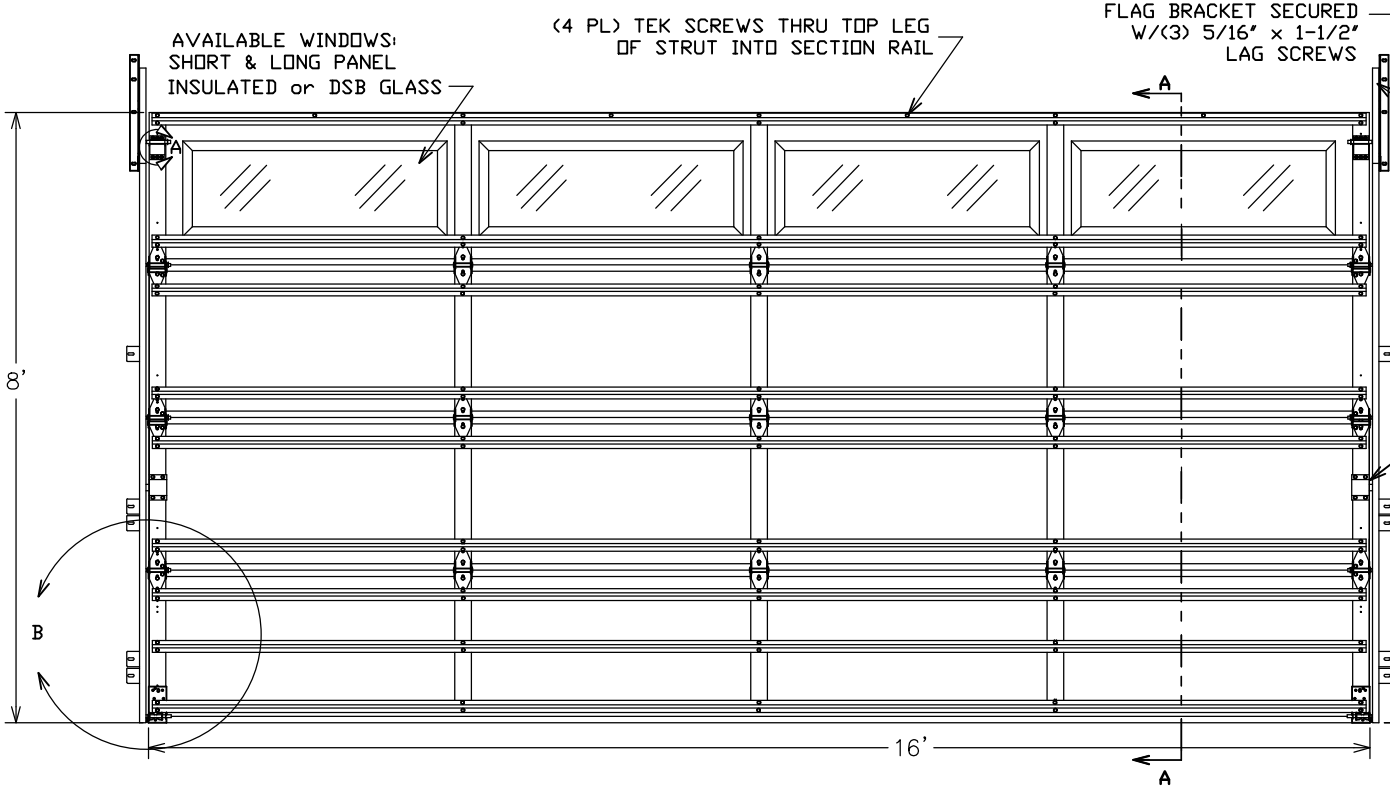

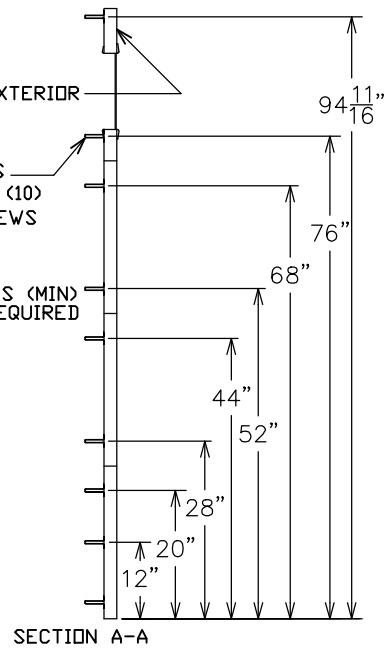

Digitally signed by John E Scates
Date: 2024.02.21 10:47:42 -06'00'

FOR DOORS WITH MORE THAN FOUR SECTIONS
EACH ADDITIONAL SECTION NEEDS TO
REPLICATE SECTION #3.

Printed copies of this document are not considered signed and sealed and the signature must be verified on any electronic copies.

1. SLIDE LOCKS MUST BE ATTACHED TO ONE SIDE OF DOOR. BAR LOCKS OR OPERATOR MAY BE SUBSTITUTED.
2. THIS DOOR NOT RATED FOR IMPACT.
3. THIS DOOR MUST BE SECURELY ATTACHED TO THE BUILDING. THIS DOOR WAS EVALUATED FOR MOUNTING ONTO A SOUTHERN PINE 2X6 LAID FLAT AROUND THE PERIMETER OF THE OPENING, WITH THE 2X6 SECURED TO THE BUILDING. SEE DASMA TECHNICAL DATA SHEET 161 AT WWW.DASMA.COM. OTHER ATTACHMENT METHODS ARE BEYOND THE SCOPE OF THIS DOCUMENT AND MUST BE EVALUATED AND APPROVED BY A LICENSED PROFESSIONAL ENGINEER.
4. 7/16" OR THICKER STOP MOLDING MUST BE ATTACHED USING #12 OR LARGER WOOD SCREWS WITH SPACING NOT EXCEEDING 6 INCHES. NAILS ARE NOT PERMITTED.
5. THIS DOOR WAS TESTED PER DASMA 108-2017

JOHN E. SCATES
LICENSE
No. 51737
STATE OF
FLORIDA
PROFESSIONAL ENGINEER

WIDTH	PRESSURES
12'	+24.44 / -27.24 psf
14'	+20.95 / -23.35 psf
16'	+18.33 / -20.43 psf
18'	+14.48 / -16.14 psf
20'	+11.73 / -13.08 psf

SAFE-WAY
GARAGE DOORS

3814 E. US 30, Warsaw, IN 46580
877 775-1670 FAX: 800 276-7233

DESIGN PRESSURE
+18.33/-20.43 PSF

TESTED PER DASMA 108-2017

REV.	DATE:	DESCRIPTION:
A	2/13/2024	ADDED PRESSURE CHART FOR ADDITIONAL WIDTHS.

John E. Scates, P.E.
2560 King Arthur Blvd #124-54
Lewisville TX 75056
FL PE 51737

DRAWN BY: DM	Sheet 1 of 2
DOOR SIZE:	16'0" WIDE x 8'0" HIGH
DATE: 1/30/2024	DRAWING. NO. D-4124

24 GA. & 25 GA.
PAN MODELS:

DETAIL A

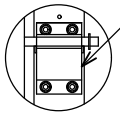

ADJUSTABLE TOP FIXTURE
16 GAUGE HAT
14 GAUGE SLIDER
FASTENED TO END STILE
W/(4) 1/4" X 3/4" TEK SCREWS

JAMB OVERLAP DETAIL

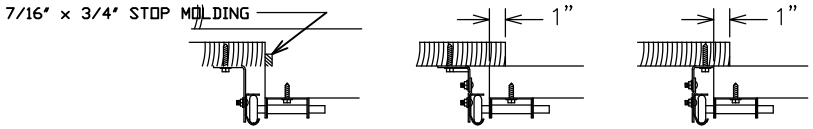

BRACKET MOUNT ANGLE MOUNT REVERSE ANGLE MOUNT

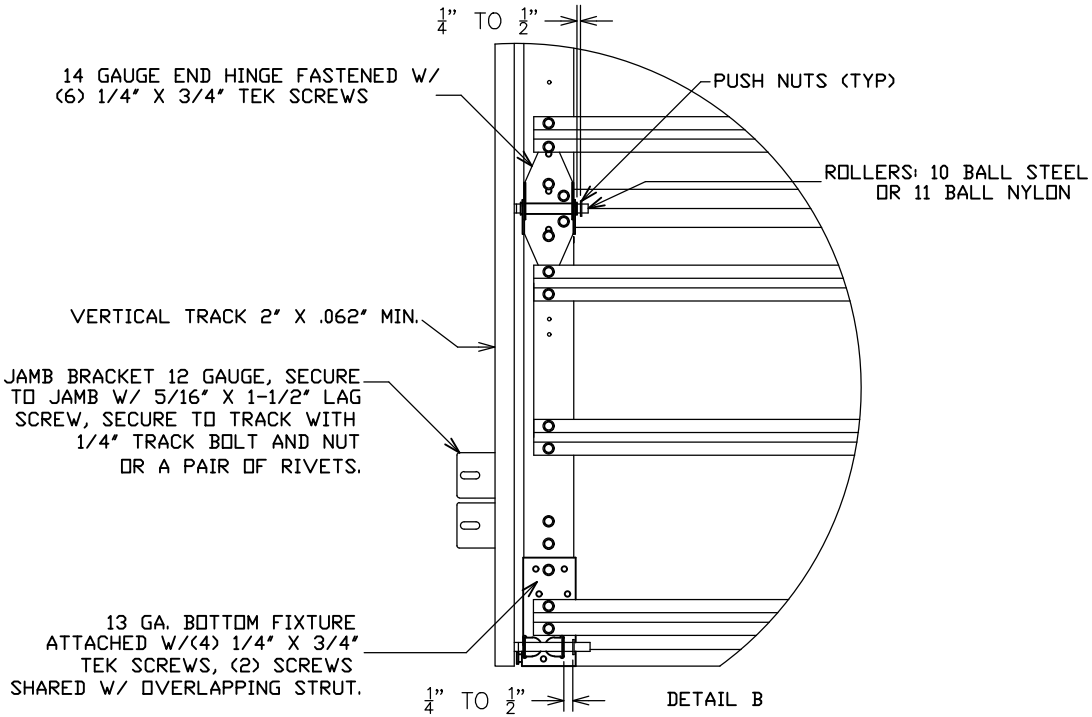

DETAIL B

Printed copies of this document are not considered signed and sealed and the signature must be verified on any electronic copies.

WIDTH	PRESSURES
12'	+24.44 / -27.24 psf
14'	+20.95 / -23.35 psf
16'	+18.33 / -20.43 psf
18'	+14.48 / -16.14 psf
20'	+11.73 / -13.08 psf

JOHN E. SCATES
LICENSE
No. 51737
STATE OF
FLORIDA
PROFESSIONAL ENGINEER

SAFE-WAY
GARAGE DOORS

3814 E. US 30, Warsaw, IN 46580
877 775-1670 FAX: 800 276-7233

DESIGN PRESSURE
+18.33/-20.43 PSF

TESTED PER DASMA 108-2017

REV.	DATE:	DESCRIPTION:
A	2/13/2024	ADDED PRESSURE CHART FOR ADDITIONAL WIDTHS.

John E. Scates, P.E.
2560 King Arthur Blvd #124-54
Lewisville TX 75056
FL PE 51737

DRAWN BY: DM	Sheet 2 of 2
DOOR SIZE:	16'0" WIDE x 8'0" HIGH
DATE: 1/30/2024	DRAWING. NO. D-4124