Evaluation Report

"End Wall Panel 24 × 3.5 – 22 Ga."
Metal Wall Assembly

Manufacturer

Aztec Steel Building, Inc.
200 Bradley Street
Mckees Rock, PA 15136
(800) 349-0150

for

Florida Product Approval

FL 11815.3 R6

Florida Building Code 8th Edition (2023)
Per Rule 61G20-3

Method:	**2 – B**
Category:	**Structural Components**
Sub - Category:	**Structural Wall**

Product Name:	*"End Wall Panel 24 × 3.5 – 22 Ga."*
Assembly Description:	*End Wall Panel on Quonset Hut Structures*
Material:	*Steel*
Panel Thickness:	*22 Ga.*

This item has been digitally signed and sealed by James L. Buckner, P.E., on this date below. Printed copies of this document are not considered signed and sealed, and the signature must be verified on any electronic copies.

Prepared by:
James L. Buckner, P.E., SECB
Florida Professional Engineer # 31242
Florida Evaluation ANE ID: 1916
Report No. 23-604.3_EndWall-22Ga-S2S-ER
(Revises Report No. 21-414.3_EndWall-22Ga-S2S-ER, FL11815.3 R5)
Date: 12/26/2023

JAMES L. BUCKNER
LICENSE
No 31242
STATE OF FLORIDA
PROFESSIONAL ENGINEER

James L. Buckner, P.E.
FL31242

2023.12.26
16:29:54 -05'00'

Contents:

Evaluation Report Pages 1 – 7

Manufacturer: Aztec Steel Building, Inc.

Product Name: "End Wall Panel 24 x 3.5 – 22 Ga."

Product Category: Structural Components

Product Sub-Category Structural Wall

Compliance Method: State Product Approval Rule 61G20-3.005 (2) (b)

Product Description: 22 Ga. Steel End Wall Panel for Quonset Hut Structures

Product Assembly as Evaluated: Refer to Page 4 of this report for product assembly components/materials & standards:

- End Wall Panel base to concrete trough foundation
- End Wall Panel top connection to Inner Curved Angle
- End Wall Panel Top Connection to Outer Curved Angle

Support Description:

1. **Bottom Support:**

Design of bottom support is outside the scope of this evaluation.

(a) Concrete Trough foundation

Material: Concrete
Trough Depth: 4 in. minimum

(b) Bottom Grout Support

Material property: Non-Shrink and Non-Porous
Compressive Strength: 4,000 psi minimum

2. **Top Support:**

Aztec Steel Building Corp. to be responsible for the design of the top support.

Identification: **"Inner Curved Angle"**
Material: Steel
Thickness: 20 Ga. Minimum
Yield Strength: 50 ksi Minimum
Corrosion Resistance: Per FBC Section 1507.4.3

Performance:

Wind Resistance: Allowable ASD - Factor of Safety 1.5

Negative Load: – 29.2 PSF
Positive Load: + 23.4 PSF

Based on:

Support Spacing: 16 ft o.c. Maximum
Span Condition: Single Span

Performance Standards: The following test protocols were performed to demonstrate compliance with the intent of the code:

- **ASTM E330 –** *Standard Test Methods of Conducting Strength Tests of Panels for Building Construction*

Code Compliance: The product assembly described herein has demonstrated compliance with the: Florida Building Code 8th Edition (2023), Section 1708.2

Evaluation Report Scope: This product evaluation demonstrates compliance of this product with the physical properties & structural wind load requirements of the Florida Building Code as related to the scope section of Florida Product Approval Rule 61G20-3.001.

Limits of Use:

- Scope of "Limitations and Conditions of Use" for this evaluation:
  This evaluation report for "Optional Statewide Approval" contains technical documentation, specifications and installation method(s) which include "Limitations and Conditions of Use" throughout the report in accordance with Rule 61G20-3.005. Per Rule 61G20-3.004, the Florida Building Commission is the authority to approve products under "Optional Statewide Approval".
- Option for application outside "Limitations and Conditions of Use"
  Rule 61G20-3.005(1)(e) allows engineering analysis for "project specific approval by the local authorities having jurisdiction in accordance with the alternate methods and materials authorized in the Code". Any modification of the product as evaluated in this report and approved by the Florida Building Commission is outside the scope of this evaluation and will be the responsibility of others.
- Design of support system is outside the scope of this report. Support shall be designed by others and shall comply with the FBC Chapter 19 for concrete, Chapter 21 for Masonry (Grout), Chapter 22 for steel and Chapter 16 for structural loading.
- Diaphragm and axial load capacity is outside the scope of this evaluation.
- Fire Classification is outside the scope of Rule 61G20-3, and is therefore not included in this evaluation.
- This evaluation report does not evaluate the use of this product for use in the High Velocity Hurricane Zone code section. (Dade & Broward Counties)

Quality Assurance: The manufacturer has demonstrated compliance of roof panel products in accordance with the Florida Building Code and Rule 61G20-3.005 (3) for manufacturing under a quality assurance program audited by an approved quality assurance entity through Keystone Certifications, Inc. (FBC Organization ID# QUA 1824).

Components Material Standards:

"End Wall Panel 24 x 3.5 – 22 Ga."

Material:	Steel
Thickness:	22 Ga.
Yield Strength:	50 ksi minimum
Corrosion Resistance:	Per FBC Section 1507.4.3

"Outer Curved Angle"

Material:	Steel
Thickness:	20 Ga.
Yield Strength:	50 ksi minimum
Corrosion Resistance:	Per FBC Section 1507.4.3

Hex Head Machine Flanged Bolt

Location:	A) Panel to Inner Curved Angle connection B) Panel to Outer Curved Angle connection C) Panel to Panel Lap connection
Style:	Flanged Bolt with Weather Sealed Washer & Square Nut
Size:	5/16" - 18 x 3/4"
Material:	Steel
Corrosion Resistance:	Plated per ASTM B 112

Installation:

"End Wall Panel" to Support System

1. **Panel base to concrete trough foundation**
   Set panel base in concrete trough
   4 in. minimum embedment
   Pour grout into concrete trough
2. **Panel to Inner Curved Angle Connection**
   Fastener Type: Hex Head Machine Flanged Bolt
   Fastener Spacing: 12 in. o.c.
   (at each inner face corrugation)
3. **Panel to Outer Curved Angle Connection**
   Fastener Type: Hex Head Machine Flanged Bolt
   Fastener Spacing: 12 in. o.c.
   (at each outer face corrugation)
4. **Panel to Panel Lap Connection**
   Fastener Type: Hex Head Machine Flanged Bolt
   Fastener Spacing: 9 in. o.c
   (along panel laps)

"The End Wall Panel System" shall be installed in compliance with the installation method listed in this report and applicable code sections of FBC 8th Edition (2023). The installation method described herein is in accordance with the scope of this evaluation report. Refer to manufacturer's installation instructions as a supplemental guide for attachment.

Referenced Data:

1. ASTM E 330- Uniform Static Air Pressure Difference Test
   By Farabaugh Engineering & Testing, Inc. (FBC Organization #TST ID: 1654)
   Report #: T283-08, Dated: 10/28/08

2. Quality Assurance
   Keystone Certifications, Inc. (FBC Organization ID# QUA 1824)
   Ameritech Enterprises, LLC. Licensee # 879

3. Certification of Independence
   By James L. Buckner, P.E. @ CBUCK Engineering
   (FBC Organization # ANE 1916)

Installation Method

Aztec Steel Building, Inc.

End Wall Panel 24 x 3.5 – 22 Ga. Steel for Quonset Hut Structures

Profile Drawings

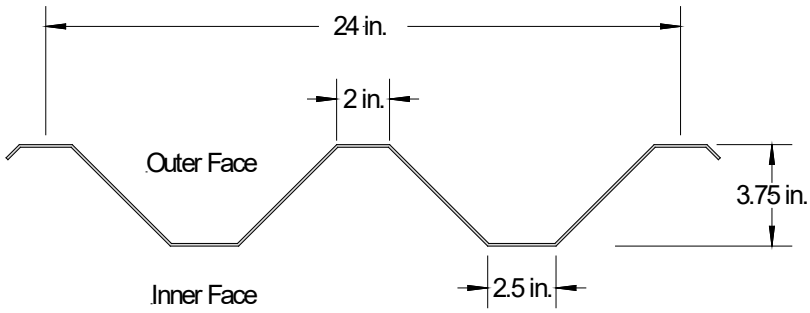

Typical Panel Profile Section View

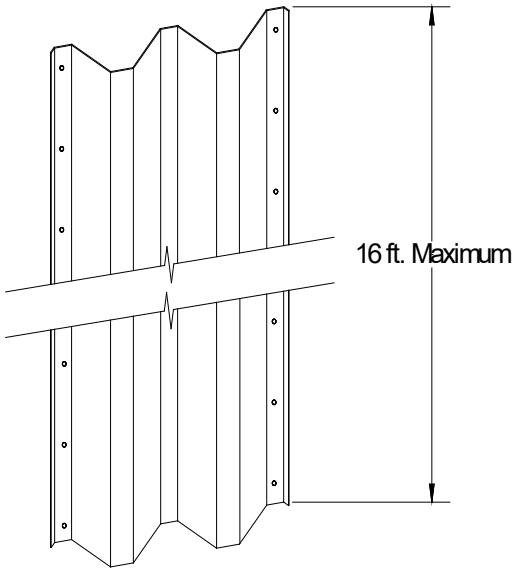

Typical Panel View

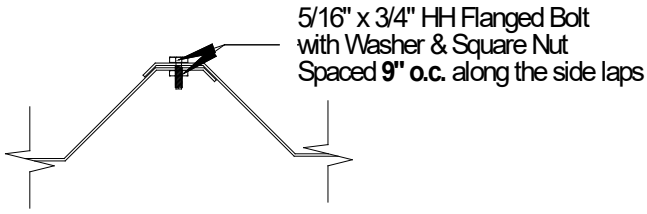

Typical Panel to Panel Lap Connection View

Installation Method

Aztec Steel Building, Inc.

End Wall Panel 24 x 3.5 – 22 Ga. Steel for Quonset Hut Structures

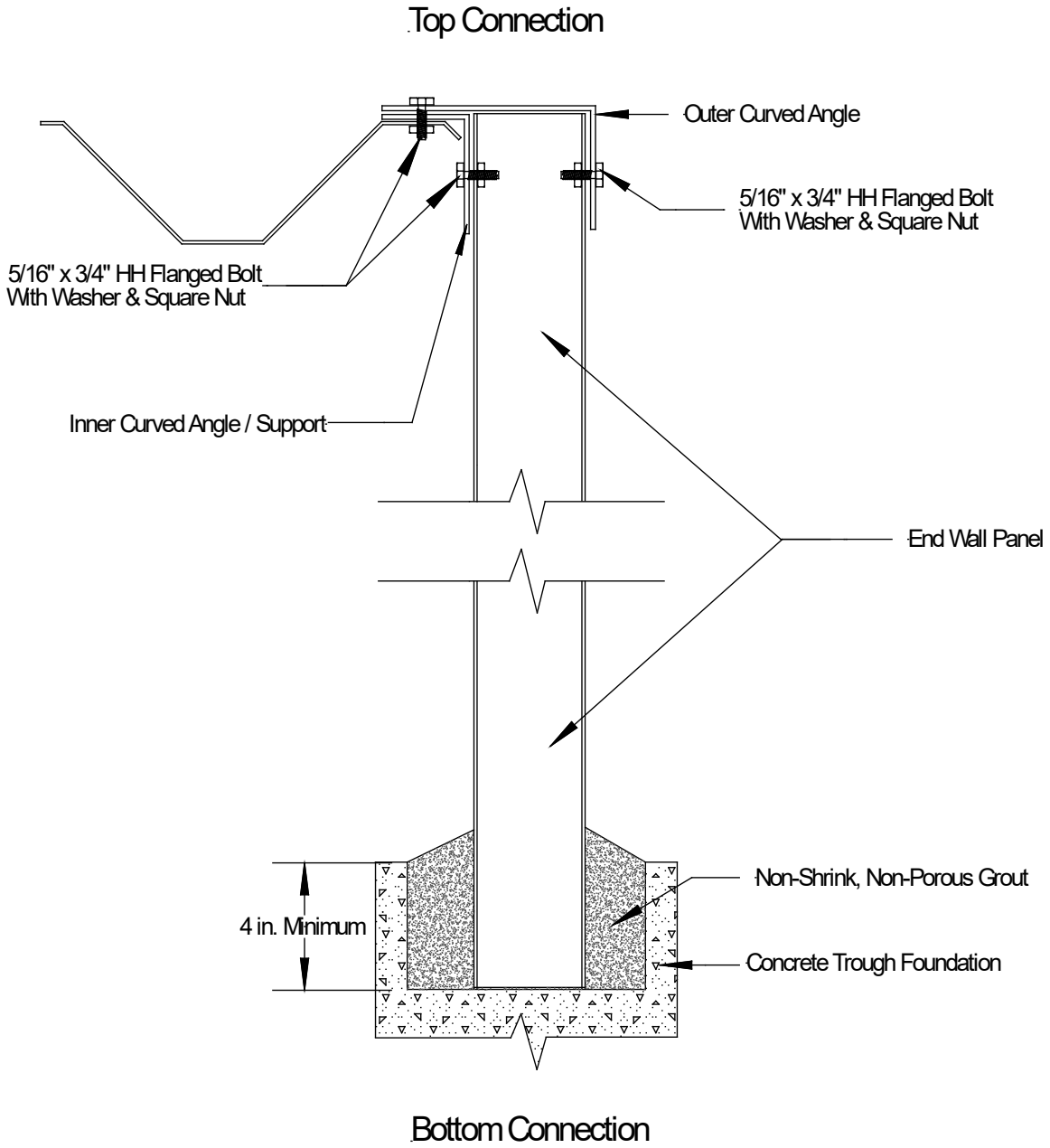

Typical Assembly View