# 750 DS (21") SOLATUBE CURB-MOUNT FLASHING HARD CEILING

NOTES:

1. STRUCTURAL ELEMENTS (PLYWOOD, RAFTERS, DRYWALL ETC.) BY OTHERS & SHOWN FOR REFERENCE ONLY.
2. ALL TUBE JOINTS & SEAMS TAPED WITH 2" FOIL TAPE (NOT SHOWN).

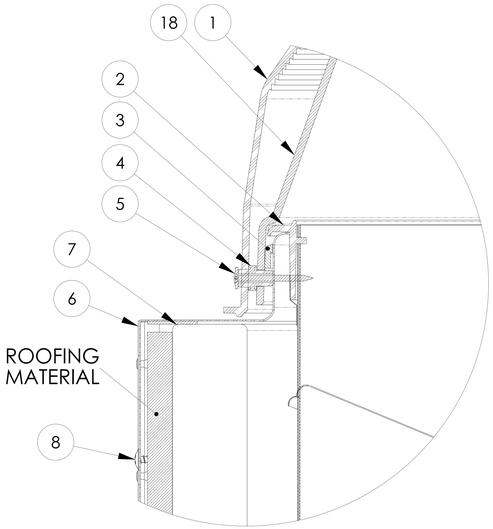


**DETAIL A**
**SCALE 3 : 1**

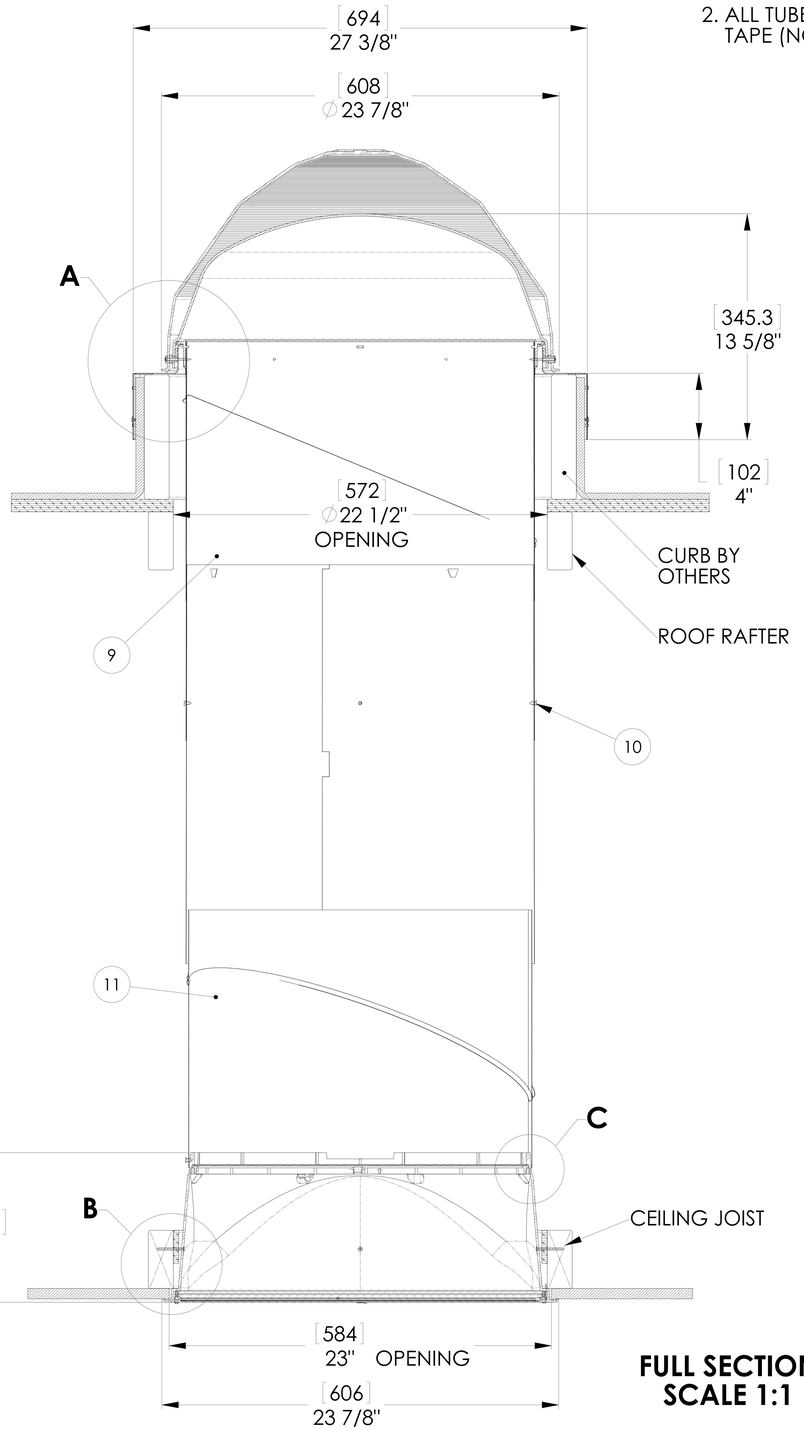


**FULL SECTION**
**SCALE 1:1**

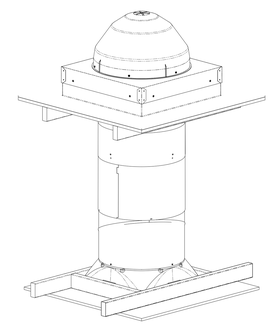

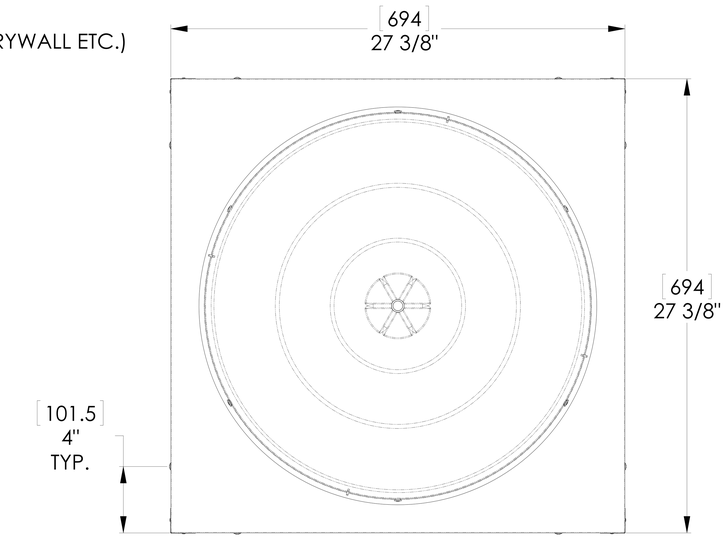


**TOP VIEW**
**SCALE 1:1**

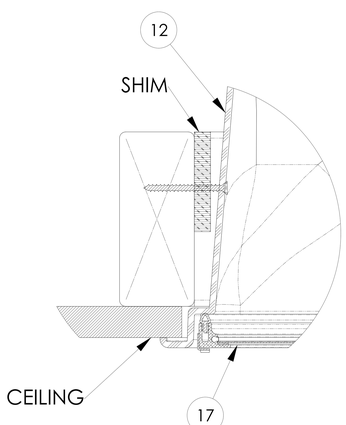


**DETAIL B**
**SCALE 3 : 1**

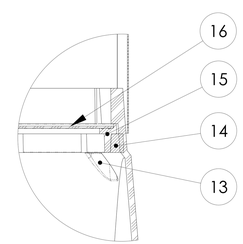


**DETAIL C**
**SCALE 3 : 1**

| ITEM NO. | QTY. | PART NO. | DESCRIPTION | NOTES |
|---|---|---|---|---|
| 1 | 1 | 401930 | DOME 750 DS | |
| 2 | 1 | 400781 | DOME RING 330 DS | |
| 3 | 1 | 620120 | PILE WEATHERSTRIP SEAL | |
| 4 | 3 | 700870 | SPACER | |
| 5 | 3 | 700860 | SCREW #8x1.5" SMS | |
| 6 | 1 | 230640 | FLASHING CURB STAMPED | |
| 7 | 1 | 700280 | SEALANT URETHANE | AS REQUIRED |
| 8 | 8 | 700480 | SCREW #10 X 2" SMS | |
| 9 | 1 | 300710 | TOP TUBE | |
| 10 | 1 | 301770 | TUBE 24" EXTENSION | |
| 11 | 1 | 301730 | TUBE BOTTOM | |
| 12 | 1 | 401880 | RTS TRANSITION | |
| 13 | 6 | 400795 | RTS LENS TAB | USED IN 420220 ASSEMBLY |
| 14 | 1 | 600260 | LENS SEAL | USED IN 420220 ASSEMBLY |
| 15 | 1 | 401070 | LENS RETAINER RING | USED IN 420220 ASSEMBLY |
| 16 | 1 | 400150 | NATURAL EFFECTS LENS | USED IN 420220 ASSEMBLY |
| 17 | 1 | 402010/20 | DIFFUSER FRAME ASSEMBLY | VUSION OR OPTIVIEW |
| | | | | |
| OPTIONAL COMPONENTS | | | | |
| 18 | 1 | 509100 | DOME 330 DS | |

UNLESS OTHERWISE SPECIFIED:
DIMENSIONS ARE IN INCHES
TOLERANCES:
ANGULAR: ±0.5°
.X ± .1
.XX ± .02
.XXX ± .005

MATERIAL --
--

FINISH --

DO NOT SCALE DRAWING

SOLATUBE INTERNATIONAL, INC.
COPYRIGHT 2002
WWW.SOLATUBE.COM

DRAWN BY STEVENS — DATE 10/9/15
CHECKED BY -- — DATE --
APPROVED BY -- — DATE --

SOLATUBE
2210 OAK RIDGE WAY
VISTA, CALIFORNIA 92081-8341
PH (760) 597-4400

TITLE: **750 DS (21") CURB FLASHING HARD CEILING**

SIZE | DWG. NO. **750DS-CF-HC** | REV **1**
SCALE: 1:1 | SHEET 1 OF 1

# 750 DS (21") SOLATUBE
# 8" SELF FLASHING
# HARD CEILING

NOTES:

1.STRUCTURAL ELEMENTS (PLYWOOD, RAFTERS, DRYWALL ETC.) BY OTHERS & SHOWN FOR REFERENCE ONLY

2. ALL TUBE JOINTS & SEAMS TAPED WITH 2" FOIL TAPE (NOT SHOWN)

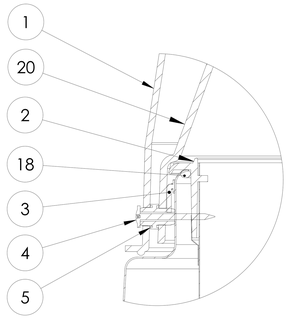


**DETAIL A**
**SCALE 3 : 1**

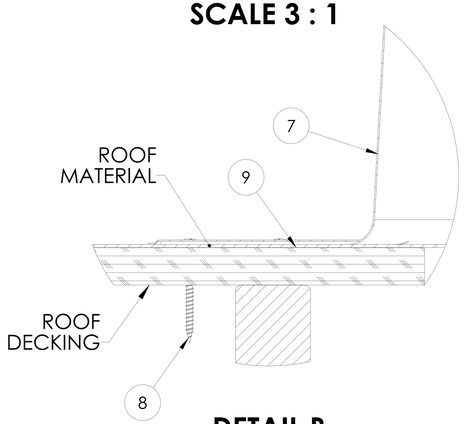


**DETAIL B**
**SCALE 3 : 1**

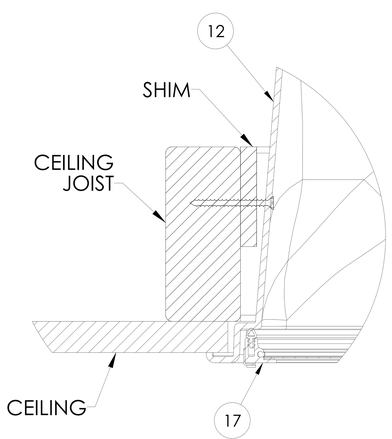


**DETAIL C**
**SCALE 3 : 1**

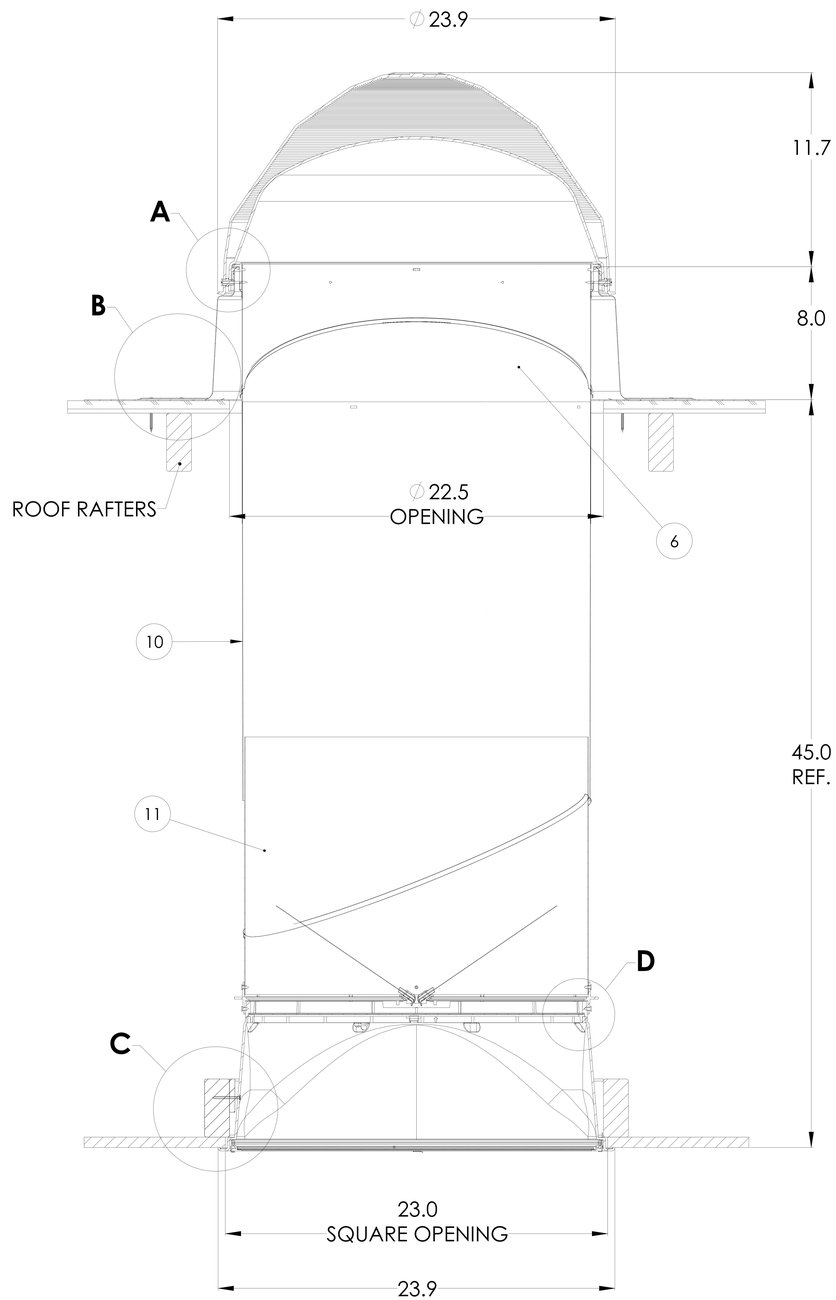


**FULL SECTION**
**SCALE 1:1**

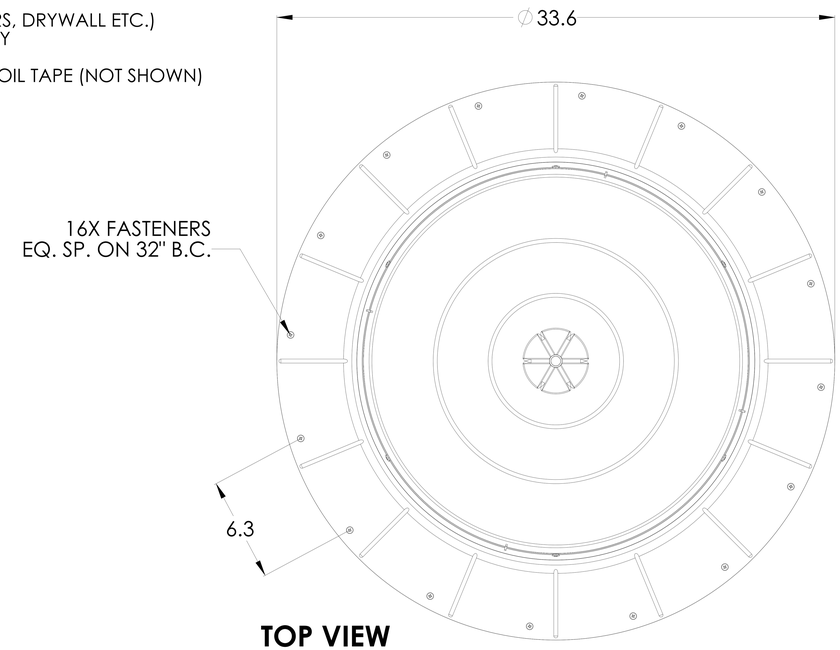


**TOP VIEW**
**SCALE 1:1**

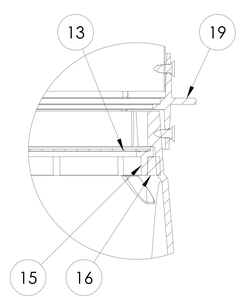


**DETAIL D**
**SCALE 3 : 1**

| ITEM NO. | QTY. | PART NO. | DESCRIPTION | NOTES |
|---|---|---|---|---|
| 1 | 1 | 401930 | PRISMATIC DOME 750 DS | |
| 2 | 1 | 400785 | TUBE RING | |
| 3 | 1 | 600280 | PILE WEATHER STRIP | |
| 4 | 6 | 700860 | SCREW #8x1.5" SMS | |
| 5 | 6 | 700870 | SPACER | |
| 6 | 1 | 301710 | TOP ANGLE ADAPTER TUBE | |
| 7 | 1 | 200870 | FLASHING 8" HIGH | |
| 8 | 16 | 700480 | SCREW #10 X 2" SMS | 20 QTY. REQUIRED FOR HVHZ |
| 9 | 1 | 700280 | SEALANT URETHANE | |
| 10 | 1 | 301770 | TUBE 24" EXTENSION | |
| 11 | 1 | 301730 | BOTTOM ANGLE ADAPTER TUBE | |
| 12 | 1 | 401880 | RTS TRANSITION | METAL TRANSITION SEE SHEET 3 |
| 13 | 1 | 400150 | NATURAL EFFECTS LENS | |
| 14 | 8 | 400795 | RTS LENS TAB (NOT SHOWN) | |
| 15 | 1 | 401070 | LENS RETAINER RING | |
| 16 | 1 | 600260 | LENS SEAL | |
| 17 | 1 | 402010/20 | DIFFUSER 21" FRAME ASSY | VUSION OR OPTIVIEW LENS |
| 18 | 1 | 600240 | GLAZING ROPE | |
| OPTIONAL COMPONENTS | | | | |
| ITEM NO. | QTY. | PART NO. | DESCRIPTION | NOTES |
| 19 | 1 | 570003 | 21" DAYLIGHT DIMMER | |
| 20 | 1 | 509100 | DOME 330 DS | |

UNLESS OTHERWISE SPECIFIED:
DIMENSIONS ARE IN INCHES
TOLERANCES:
ANGULAR: ±0.5°
.X ± .1
.XX ± .02
.XXX ± .005

MATERIAL
--
--

FINISH
--

DO NOT SCALE DRAWING

SOLATUBE INTERNATIONAL, INC.
COPYRIGHT 2015
WWW.SOLATUBE.COM

DRAWN BY: STEVENS — DATE: 10/16/15
CHECKED BY: -- — DATE: --
APPROVED BY: -- — DATE: --

SOLATUBE
2210 OAK RIDGE WAY
VISTA, CALIFORNIA 92081-8341
PH (760) 597-4400

TITLE: 750 DS (21") SELF FLASHING HARD CEILING

SIZE
DWG. NO. 750DS-SF-HC
REV 2
SCALE: 1:1
SHEET 1 OF 3

# 750DS SOLATUBE FLASHINGS

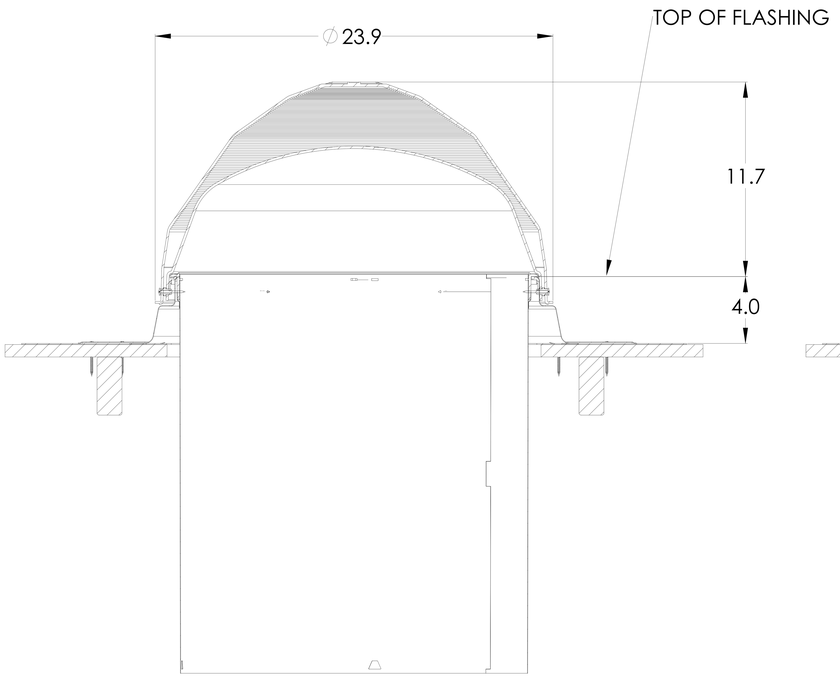


**4" HIGH SELF FLASHING**

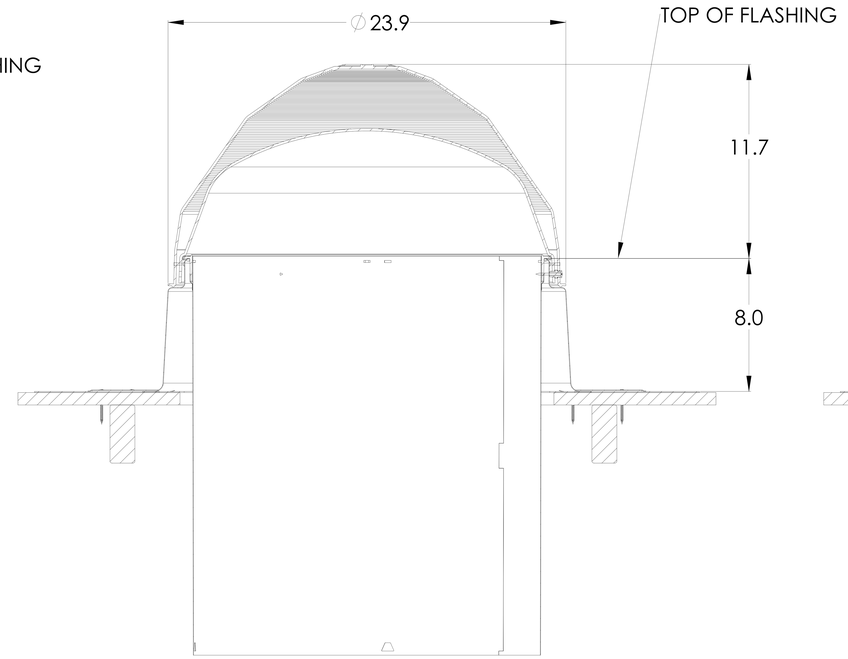


**8" HIGH SELF FLASHING**

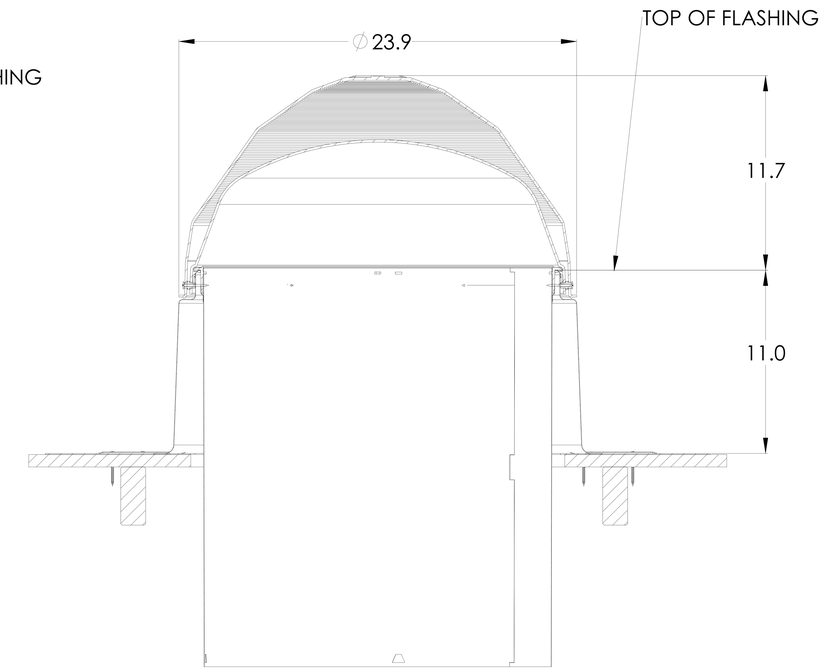


**11" HIGH SELF FLASHING**

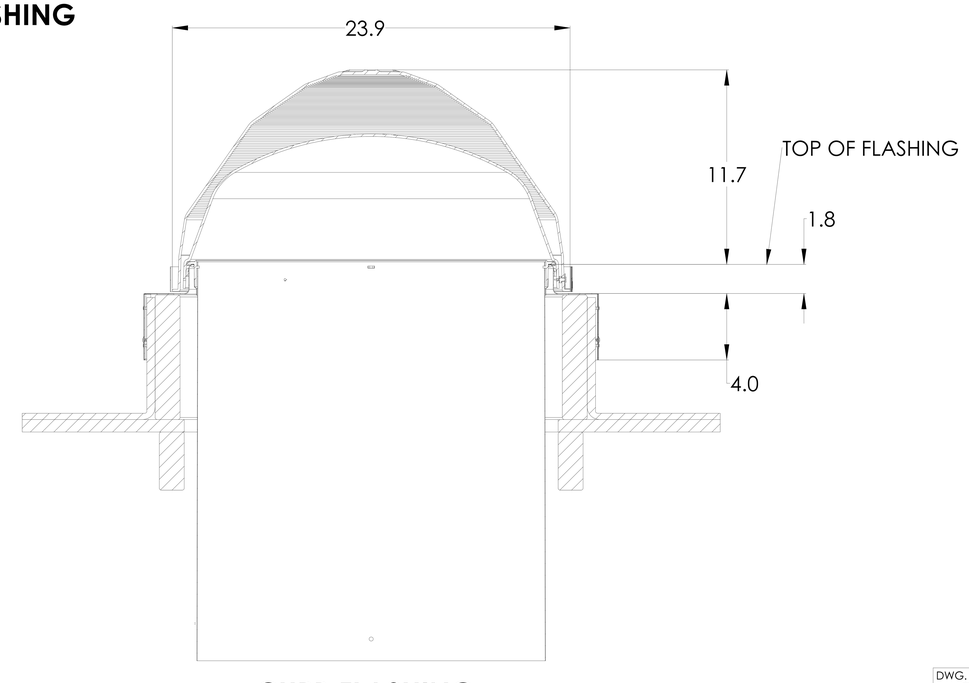


**CURB FLASHING**

| DWG. NO. | REV |
|---|---|
| 750DS-SF-HC | 2 |
| SCALE: 1:1 | SHEET 2 OF 3 |

# 750DS SOLATUBE
# METAL
# ROUND TO SQUARE

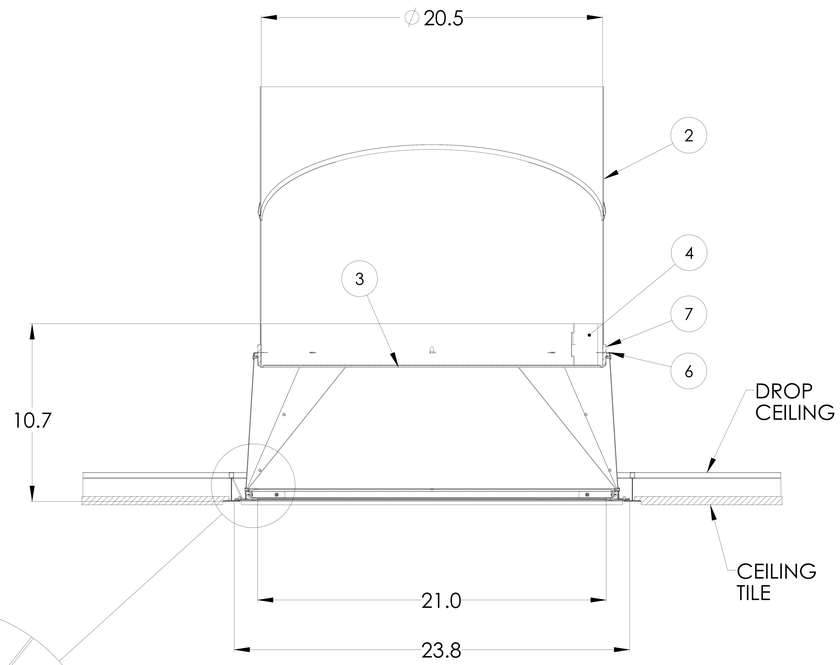


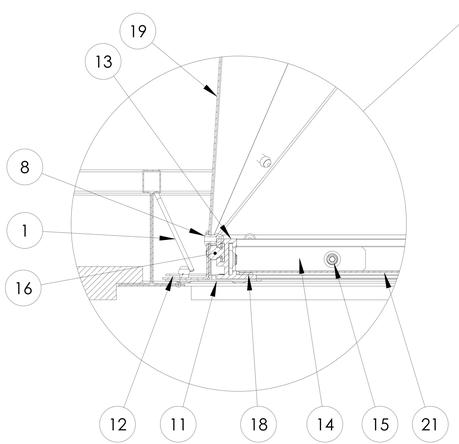


| ITEM NO. | QTY. | PART NO. | DESCRIPTION |
|---|---|---|---|
| 1 | 4 | 520090 | CLIP 21" TRANS. HOLD DOWN |
| 2 | 1 | 301730 | TUBE 21" BOTTOM |
| 3 | 1 | 422280 | NAT EFFECT LENS 330 DS OTS |
| 4 | 1 | 402215 | TRANSITION ADAPTER BAND 330/750 DS |
| 5 | 4 | 701210 | CLIP NAT EFF LENS METAL TRANSITION (NOT SHOWN) |
| 6 | 1 | 402230 | TRANSITION BOX CAP 330/750 DS |
| 7 | 1 | 600590 | FOAM SEAL RECTANGLE |
| 8 | 24 | 700635 | RIVET 1/8 X 1/4 BLIND, MULTI |
| 9 | 4 | 402180 | TRANSITION TRIM SECTION |
| 10 | 2 | 402250 | TRANSITION TRIM CORNER BRACE (NOT SHOWN) |
| 11 | 2 | 402325 | TRANSITION TRIM LEVER |
| 12 | 10 | 701180 | RIVET 1/8 X 1/4 BLIND, MULTI WHITE |
| 13 | 4 | 410475 | EXTRUSION ALUM PAINTED MITERED |
| 14 | 4 | 701130 | CORNER KEY |
| 15 | 8 | 701155 | SET SCREW 8-32 X 1/8 CUP PT |
| 16 | 4 | 600600 | FOAM SEAL T-SLOT .250 X .270 |
| 17 | 1 | 400940 | DIFFUSER PANEL (OPTIVIEW) |
| 18 | 1 | 620150 | TAPE FOAM 21" DIFFUSER |
| 19 | 4 | 410775 | TRANS PANEL DIMPLED 330/750 DS |

| DWG. NO. | REV |
|---|---|
| 750DS-SF-HC | 2 |
| SCALE: 1:1 | SHEET 3 OF 3 |

| REVISIONS | | | | |
|---|---|---|---|---|
| ECO | REV. | DESCRIPTION | DATE | INC. |
| | 1 | INITIAL RELEASE | 4/22/08 | CS |

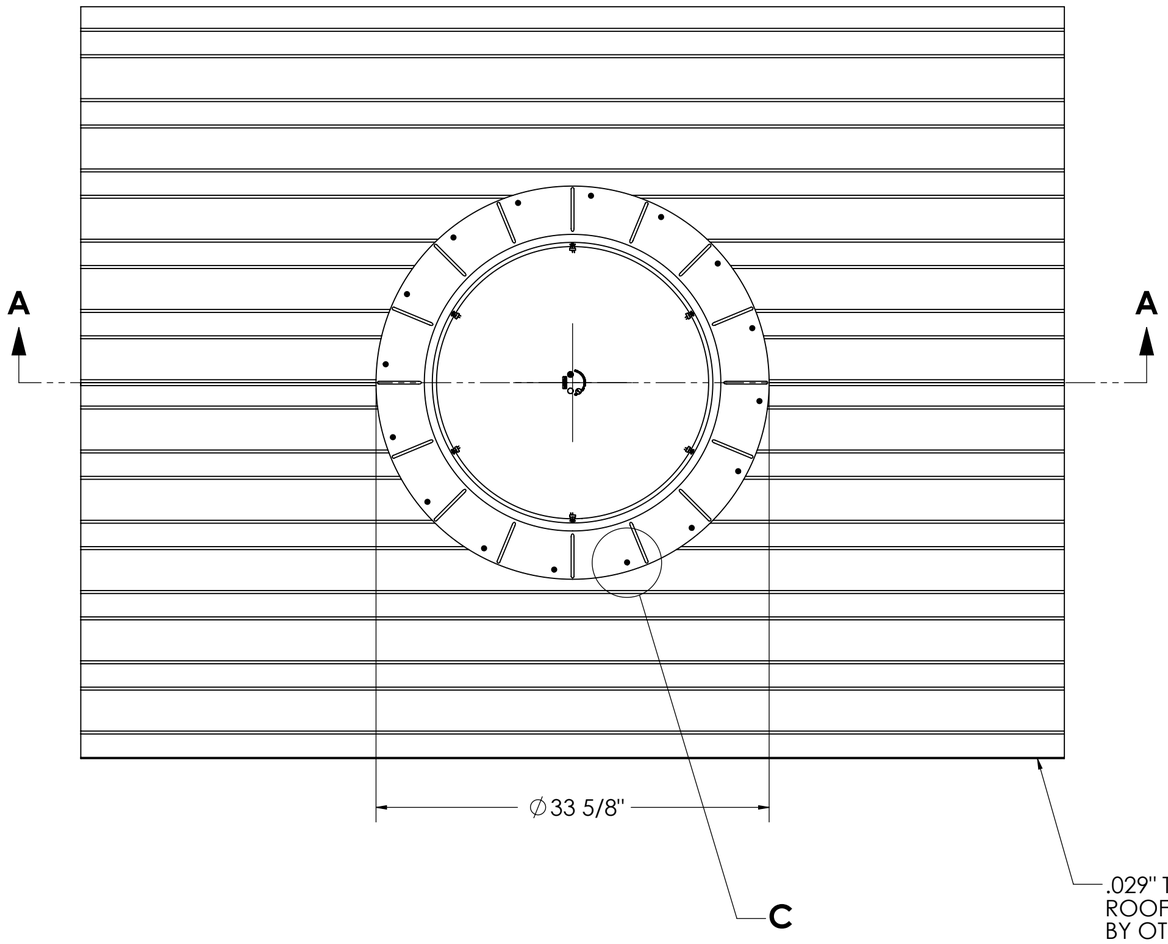


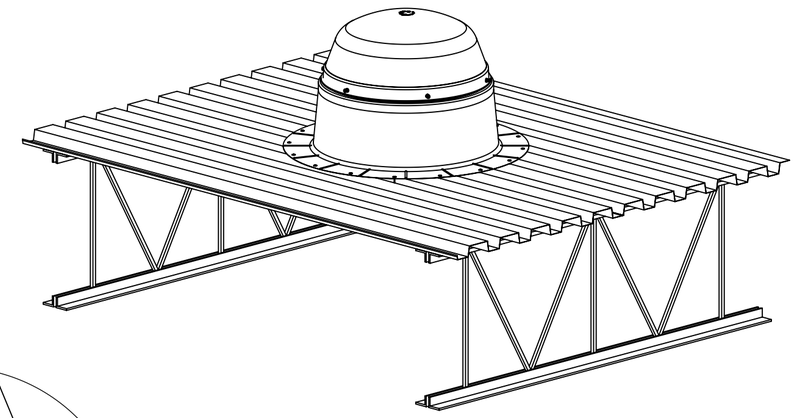

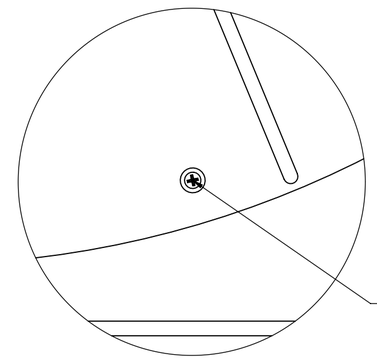


**DETAIL C**
**SCALE 1 : 2**

NOTE: THE FREQUENCY OF ALIGNMENT BETWEEN METAL DECK SURFACE AND PRE-PUNCHED FASTENER HOLES MAY VARY FROM 4 TO 16 PLACES (DEPENDING ON FLASHING ORIENTATION).

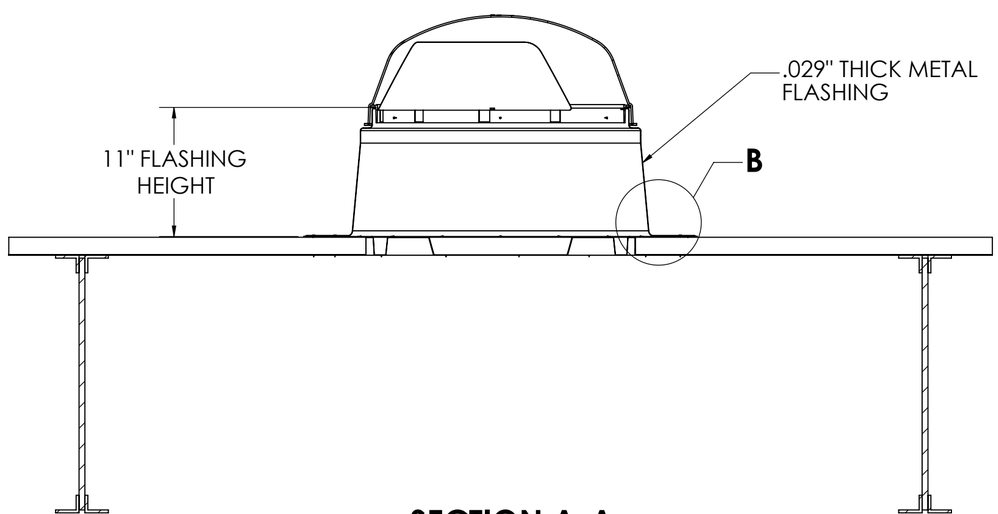


**SECTION A-A**

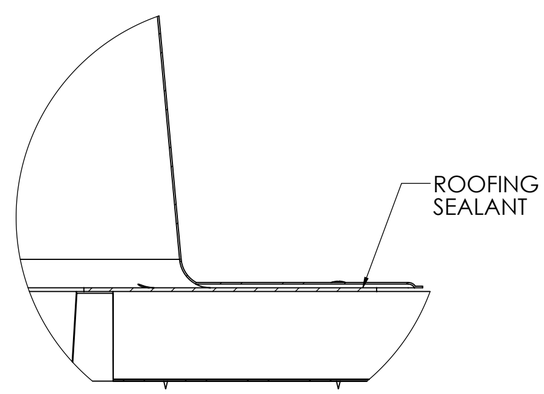


**DETAIL B**
**SCALE 1 : 2**

| | | | |
|---|---|---|---|
| UNLESS OTHERWISE SPECIFIED:<br>DIMENSIONS ARE IN INCHES<br>TOLERANCES:<br>ANGULAR: ±0.5°<br>.X ± .1<br>.XX ± .02<br>.XXX ± .005<br>FRACTION ± 1/64 | **PROPRIETARY AND CONFIDENTIAL**<br>THE INFORMATION CONTAINED IN THIS DRAWING IS THE SOLE PROPERTY OF SOLATUBE. ANY REPRODUCTION IN PART OR AS A WHOLE WITHOUT THE WRITTEN PERMISSION OF SOLATUBE IS PROHIBITED. | | SOLATUBE®<br>2210 OAK RIDGE WAY<br>VISTA, CALIFORNIA 92081-8341<br>PH (760) 597-4400 |
| MATERIAL<br>--<br>-- | DRAWN BY<br>STEVENS | DATE<br>4/22/08 | TITLE:<br>**750 DS**<br>**COMMERCIAL ASSY.** |
| FINISH<br>-- | CHECKED BY<br>-- | DATE<br>-- | SIZE: **C** / DWG. NO.: **750-11F-BDECK** / REV: **1** |
| **DO NOT SCALE DRAWING** | APPROVED BY | DATE | SCALE: 1:10 / SHEET 1 OF 1 |

| REVISIONS | | | | |
|---|---|---|---|---|
| ECO | REV. | DESCRIPTION | DATE | INC. |
| | 1 | INITIAL RELEASE | 4/22/08 | CS |

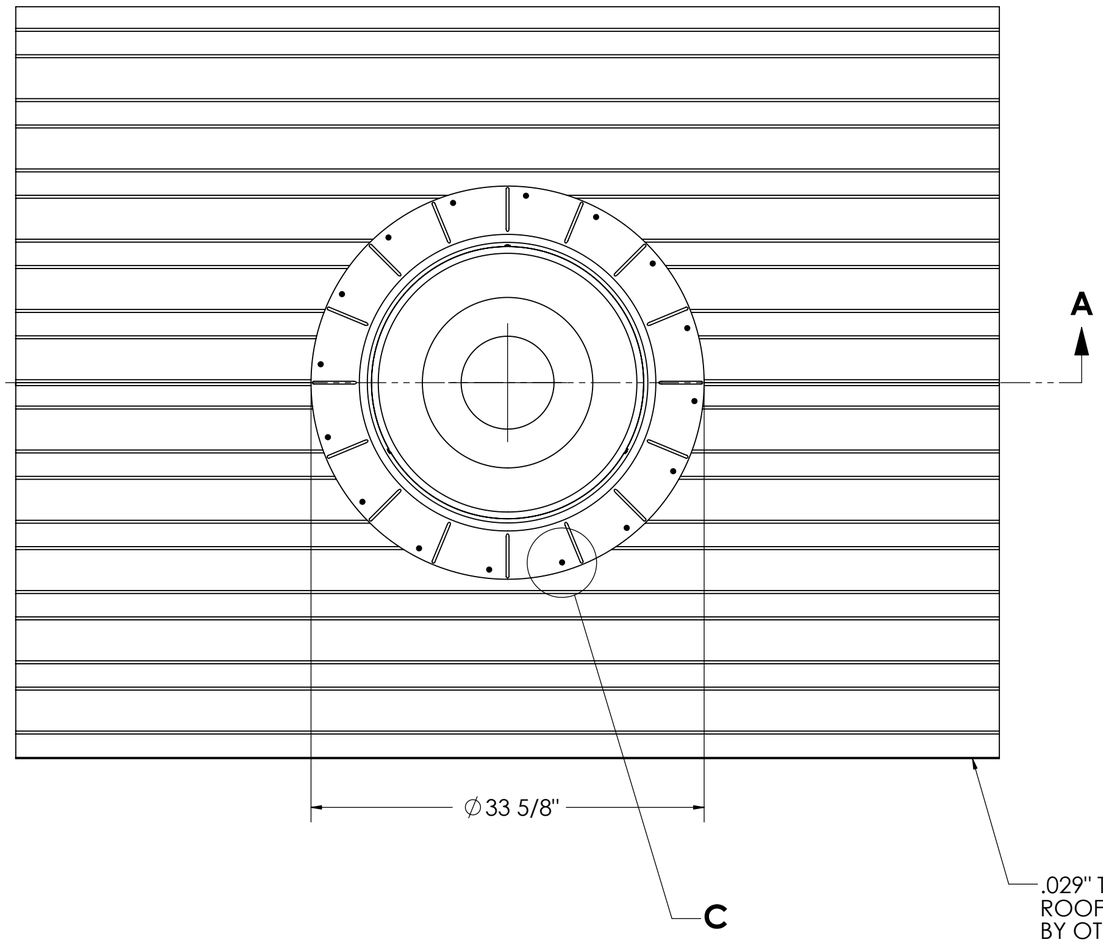


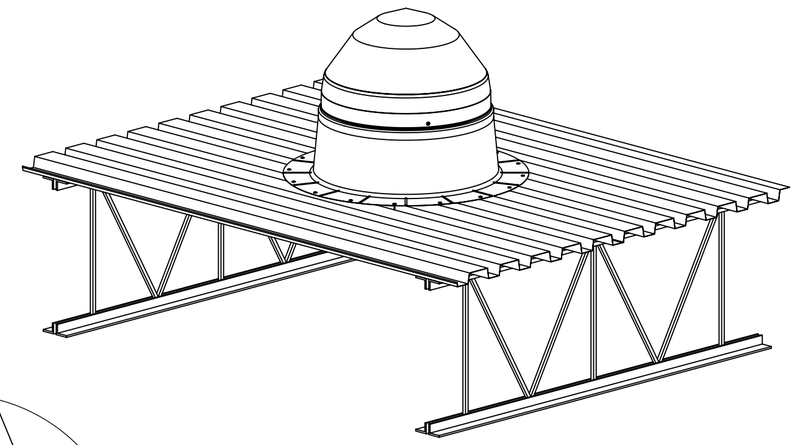

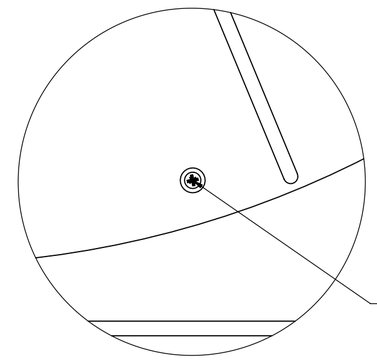


**DETAIL C**
**SCALE 1 : 2**

NOTE: THE FREQUENCY OF ALIGNMENT BETWEEN METAL DECK SURFACE AND PRE-PUNCHED FASTENER HOLES MAY VARY FROM 4 TO 16 PLACES (DEPENDING ON FLASHING ORIENTATION).

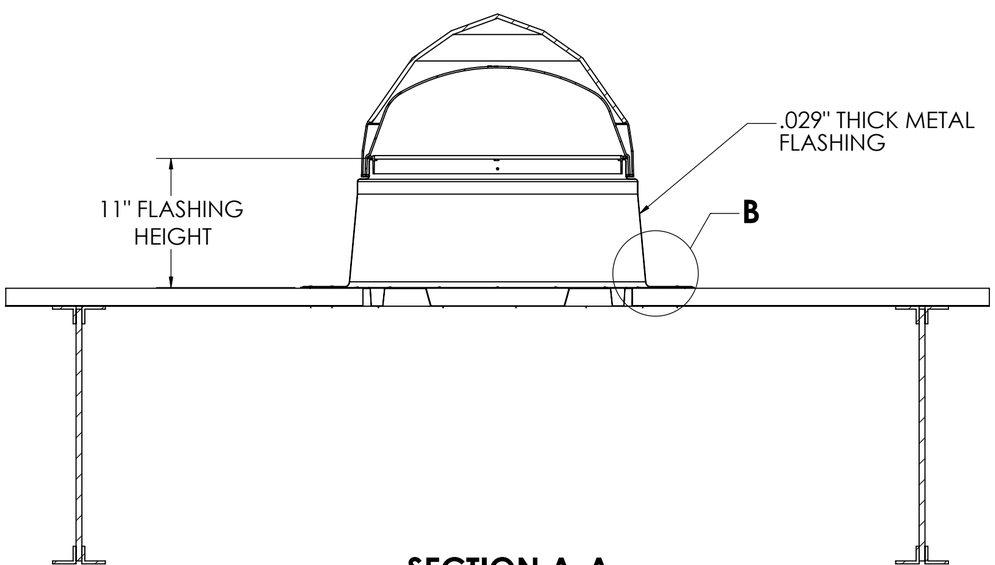


**SECTION A-A**

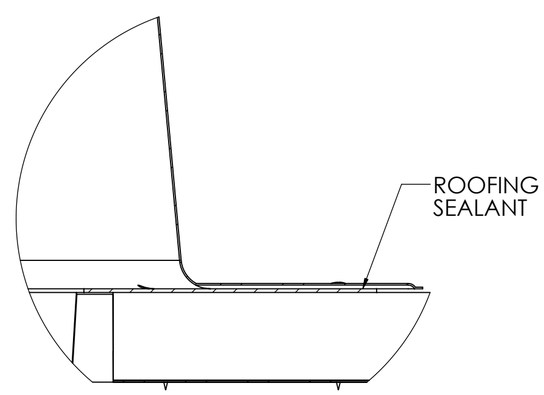


**DETAIL B**
**SCALE 1 : 2**

| | | | |
|---|---|---|---|
| UNLESS OTHERWISE SPECIFIED:<br>DIMENSIONS ARE IN INCHES<br>TOLERANCES:<br>ANGULAR: ±0.5°<br>.X ± .1<br>.XX ± .02<br>.XXX ± .005<br>FRACTION ± 1/64 | **PROPRIETARY AND CONFIDENTIAL**<br>THE INFORMATION CONTAINED IN THIS DRAWING IS THE SOLE PROPERTY OF SOLATUBE. ANY REPRODUCTION IN PART OR AS A WHOLE WITHOUT THE WRITTEN PERMISSION OF SOLATUBE IS PROHIBITED. | SOLATUBE®<br>2210 OAK RIDGE WAY<br>VISTA, CALIFORNIA 92081-8341<br>PH (760) 597-4400 | |
| MATERIAL<br>--<br>-- | DRAWN BY<br>STEVENS | DATE<br>4/22/08 | TITLE:<br>**750 DS**<br>**TYPE II & III ROOF ASSY.** |
| FINISH<br>-- | CHECKED BY<br>-- | DATE<br>-- | SIZE<br>**C** |
| | APPROVED BY | DATE | DWG. NO.<br>**750-11F-TYPE II_III** |
| **DO NOT SCALE DRAWING** | | | REV<br>**1** |
| | | | SCALE: 1:10 |
| | | | SHEET 1 OF 1 |

| REVISIONS | | | | |
|---|---|---|---|---|
| ECO | REV. | DESCRIPTION | DATE | INC. |
| | 1 | INITIAL RELEASE | 4/22/08 | CS |
| | 2 | | 10/12/2015 | CS |

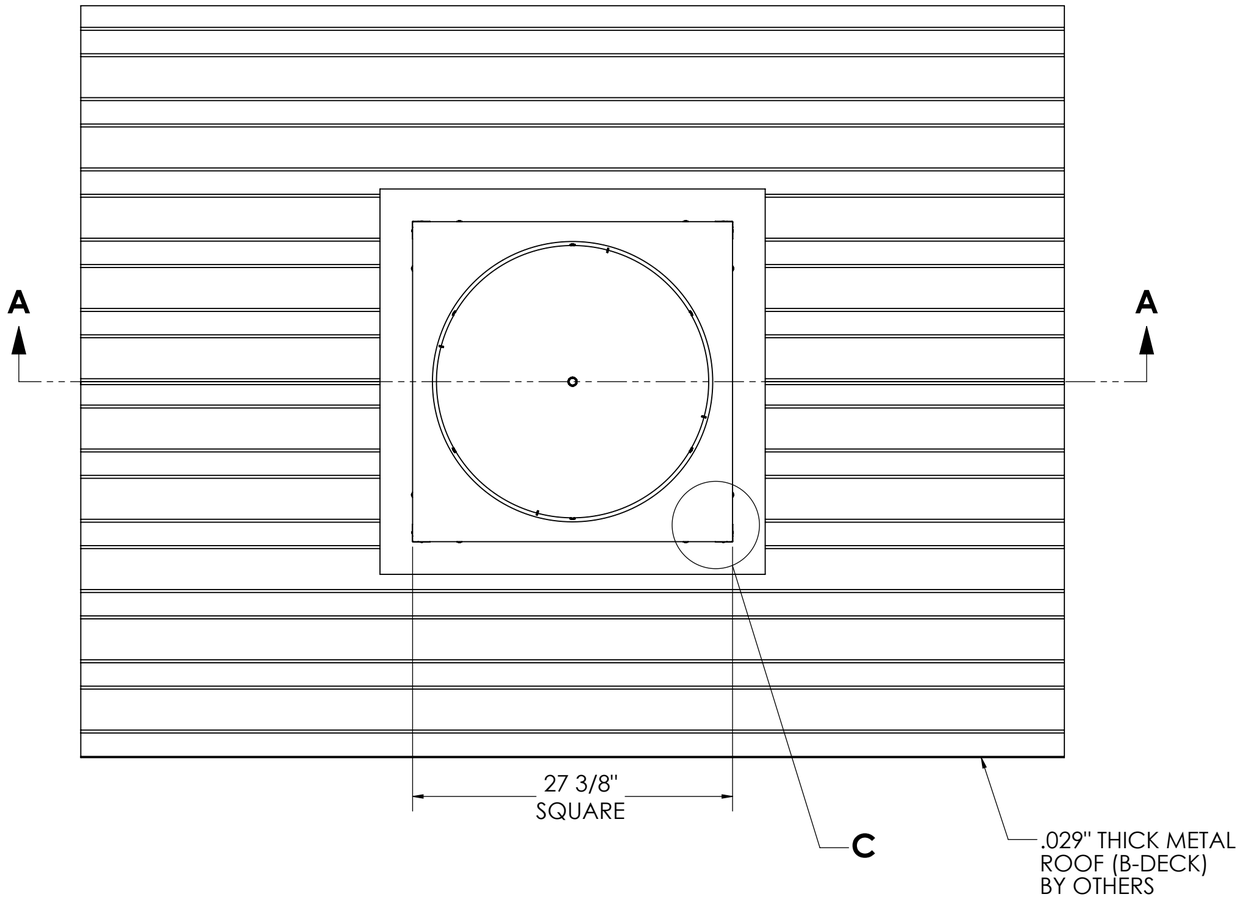


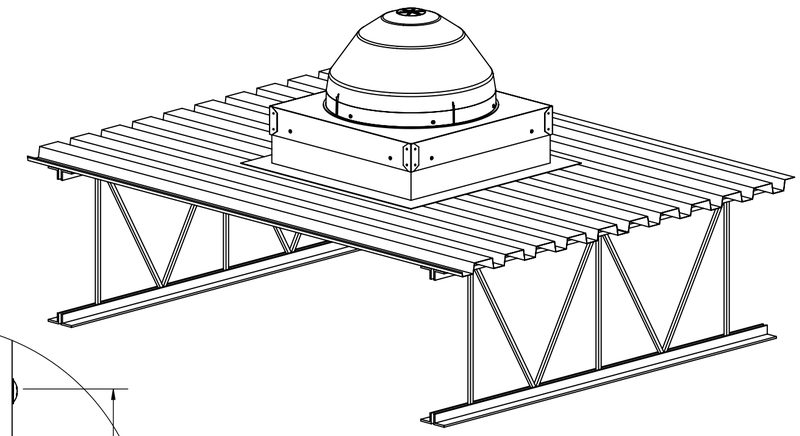

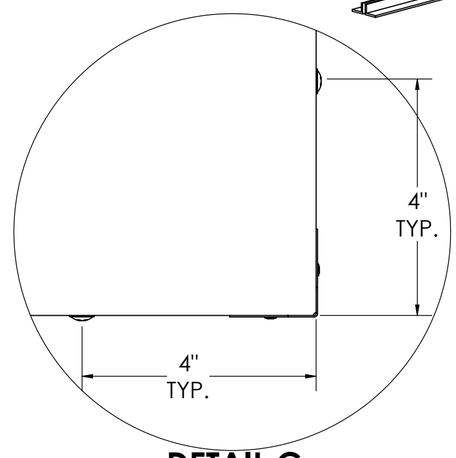


**DETAIL C**
**SCALE 1 : 2**

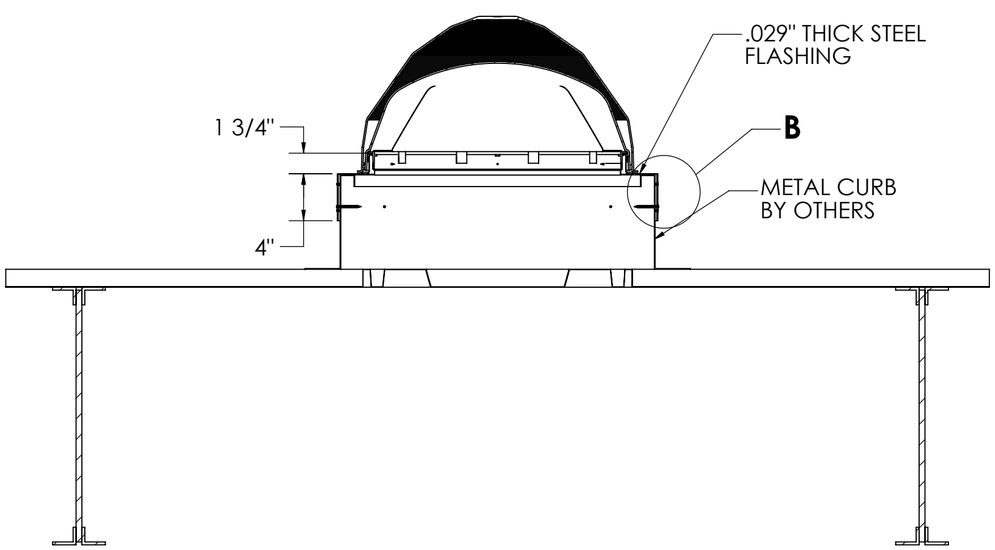


**SECTION A-A**

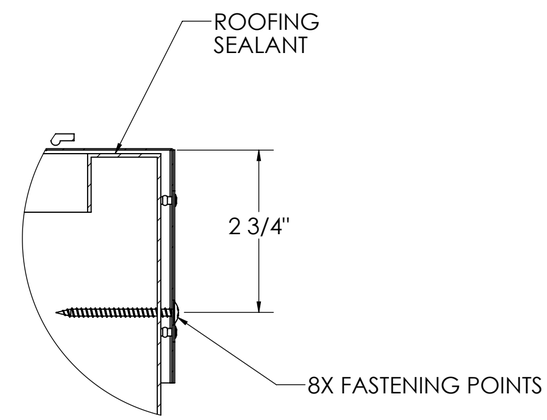


**DETAIL B**
**SCALE 1 : 2**

| UNLESS OTHERWISE SPECIFIED: | PROPRIETARY AND CONFIDENTIAL | | SOLATUBE® 2210 OAK RIDGE WAY VISTA, CALIFORNIA 92081-8341 PH (760) 597-4400 | |
|---|---|---|---|---|
| DIMENSIONS ARE IN INCHES<br>TOLERANCES:<br>ANGULAR: ±0.5°<br>.X ± .1<br>.XX ± .02<br>.XXX ± .005<br>FRACTION ± 1/64 | THE INFORMATION CONTAINED IN THIS DRAWING IS THE SOLE PROPERTY OF SOLATUBE. ANY REPRODUCTION IN PART OR AS A WHOLE WITHOUT THE WRITTEN PERMISSION OF SOLATUBE IS PROHIBITED. | | TITLE: 750 DS COMMERCIAL ASSY. | |
| MATERIAL<br>--<br>-- | DRAWN BY<br>STEVENS | DATE<br>4/22/08 | | |
| FINISH<br>-- | CHECKED BY<br>-- | DATE<br>-- | SIZE<br>C | DWG. NO.<br>750-CURB-BDECK |
| DO NOT SCALE DRAWING | APPROVED BY | DATE | SCALE: 1:10 | SHEET 1 OF 1 |

REV 2

| REVISIONS | | | | |
|---|---|---|---|---|
| ECO | REV. | DESCRIPTION | DATE | INC. |
| | 1 | INITIAL RELEASE | 4/22/08 | CS |
| | 2 | | 10/12/2015 | CS |

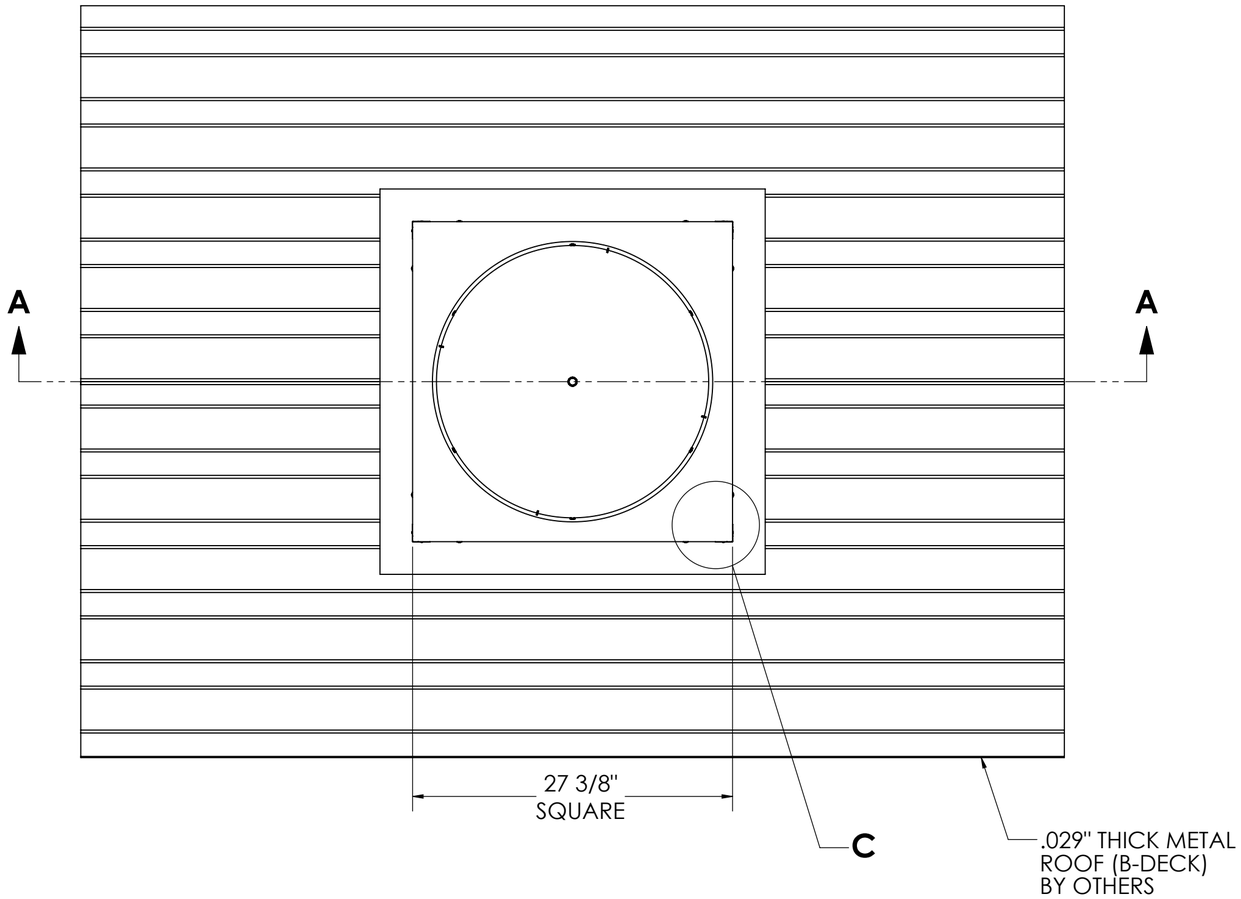


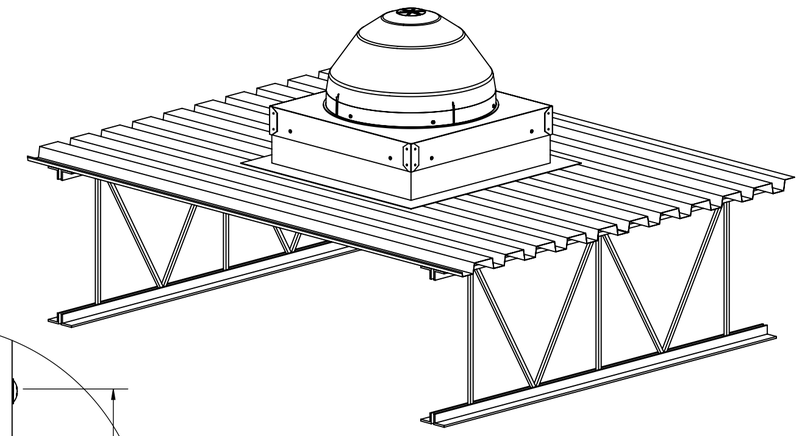

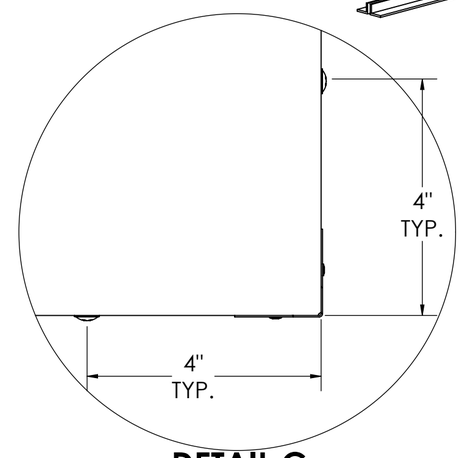


**DETAIL C**
**SCALE 1 : 2**

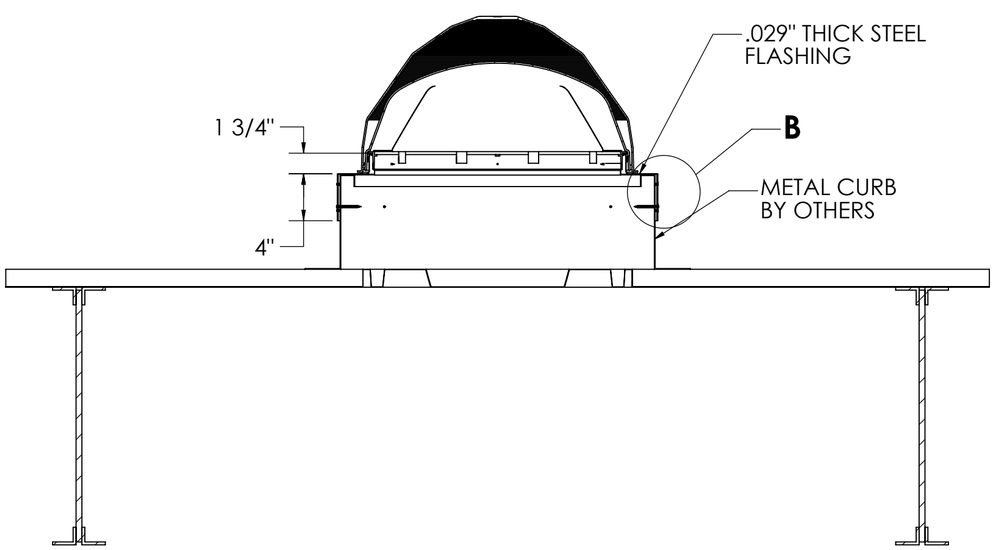


**SECTION A-A**

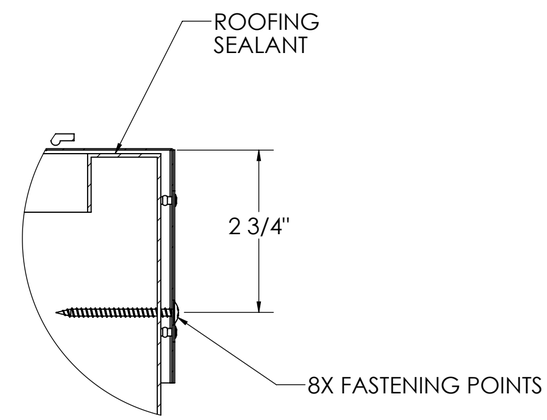


**DETAIL B**
**SCALE 1 : 2**

| UNLESS OTHERWISE SPECIFIED: | PROPRIETARY AND CONFIDENTIAL | | SOLATUBE® 2210 OAK RIDGE WAY VISTA, CALIFORNIA 92081-8341 PH (760) 597-4400 | |
|---|---|---|---|---|
| DIMENSIONS ARE IN INCHES<br>TOLERANCES:<br>ANGULAR: ±0.5°<br>.X ± .1<br>.XX ± .02<br>.XXX ± .005<br>FRACTION ± 1/64 | THE INFORMATION CONTAINED IN THIS DRAWING IS THE SOLE PROPERTY OF SOLATUBE. ANY REPRODUCTION IN PART OR AS A WHOLE WITHOUT THE WRITTEN PERMISSION OF SOLATUBE IS PROHIBITED. | | TITLE: 750 DS TYPE II & III ROOF ASSY. | |
| MATERIAL<br>--<br>-- | DRAWN BY<br>STEVENS | DATE<br>4/22/08 | | |
| FINISH<br>-- | CHECKED BY<br>-- | DATE<br>-- | SIZE<br>C | DWG. NO.<br>750-CURB-TYPE II_III |
| DO NOT SCALE DRAWING | APPROVED BY | DATE | SCALE: 1:10 | SHEET 1 OF 1 |

REV 2

| REVISIONS | | | | |
|---|---|---|---|---|
| ECO | REV. | DESCRIPTION | DATE | INC. |
| | 1 | INITIAL RELEASE | 4/30/2008 | CS |

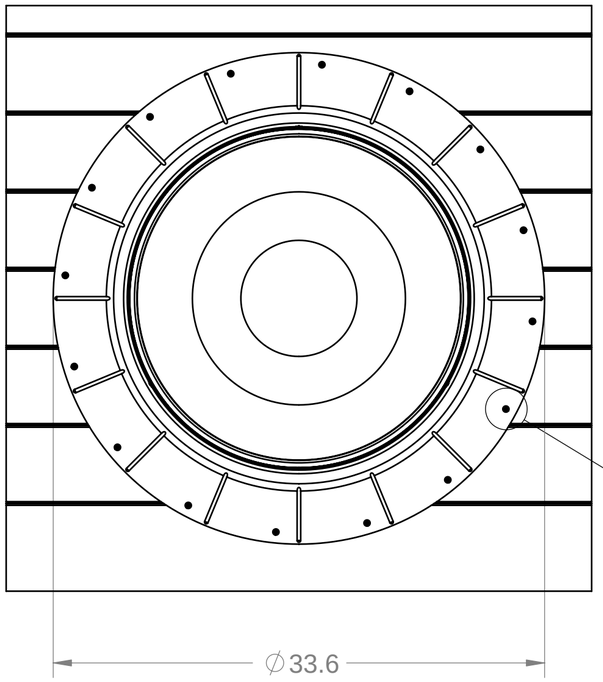


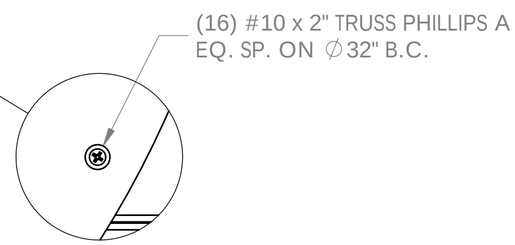


**DETAIL C**
**SCALE 1 : 2**

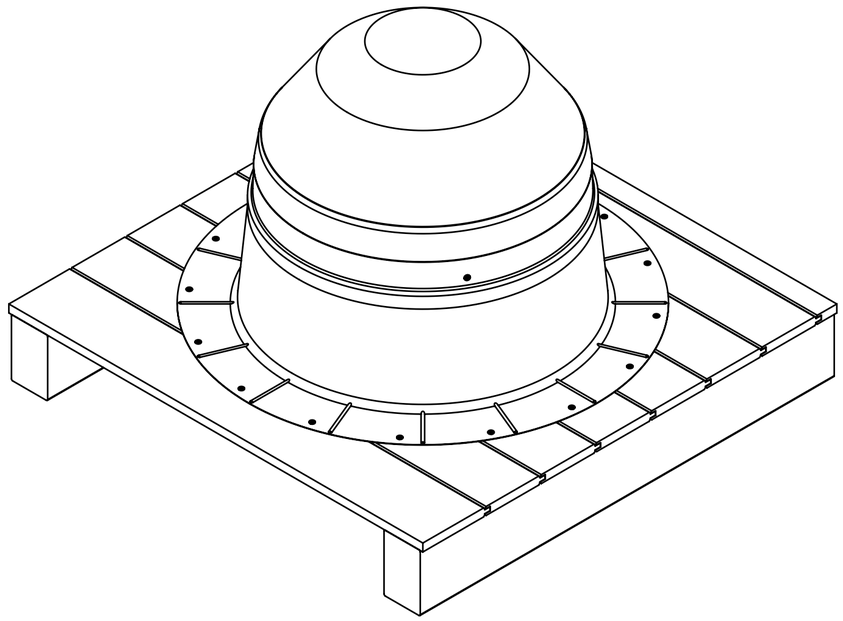

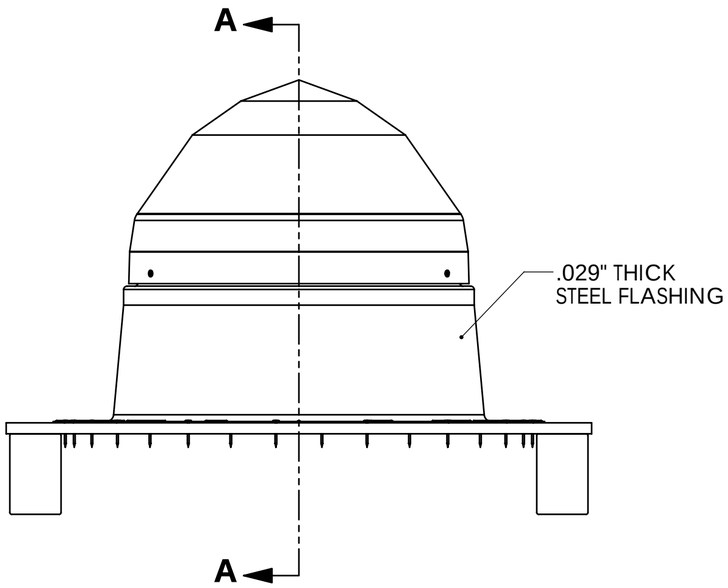


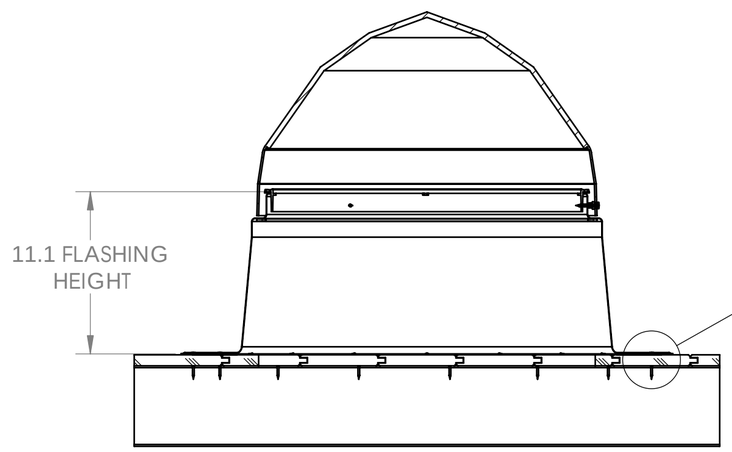


**SECTION A-A**

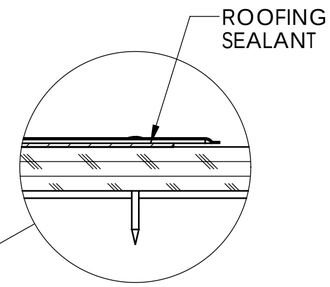


**DETAIL B**
**SCALE 1 : 2**

| UNLESS OTHERWISE SPECIFIED: | PROPRIETARY AND CONFIDENTIAL | | SOLATUBE® 2210 OAK RIDGE WAY VISTA, CALIFORNIA 92081-8341 PH (760) 597-4400 | |
|---|---|---|---|---|
| TOLERANCES ANGULAR: ±0.5° INCH: .X ± .1, .XX ± .01, .XXX ± .005 MILLIMETER: [.X] ± 2.5, [.XX] ± .25, [.XXX] ± .12 | THE INFORMATION CONTAINED IN THIS DRAWING IS THE SOLE PROPERTY OF SOLATUBE. ANY REPRODUCTION IN PART OR AS A WHOLE WITHOUT THE WRITTEN PERMISSION OF SOLATUBE IS PROHIBITED. | | TITLE: 750 DS TYPE IV (T & G) ROOF ASSY. | |
| MATERIAL -- -- | DRAWN BY STEVENS | DATE 4/30/08 | | |
| FINISH -- | CHECKED BY -- | DATE -- | SIZE C | DWG. NO. 750-SF-TYPE IV |
| | APPROVED BY -- | DATE -- | | REV 1 |
| DO NOT SCALE DRAWING | | | SCALE: 1:8 | SHEET 1 OF 1 |

| REVISIONS | | | | | |
|---|---|---|---|---|---|
| REV. | ECO | DATE | REVISED | CHECKED | APPROVED |
| B | 2673-1 | 9/21/2016 | STEVENS | | |
| C | 2717-1 | 2/16/2017 | STEVENS | | |
| D | 2779-1 | 3/16/2017 | GIFFORD | | |

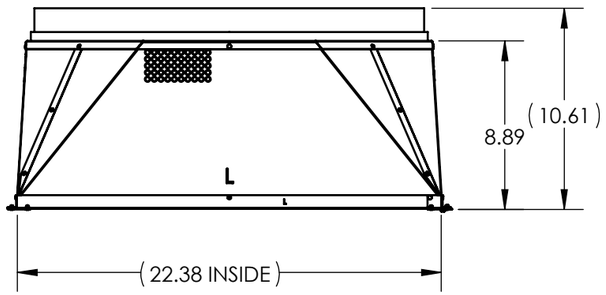


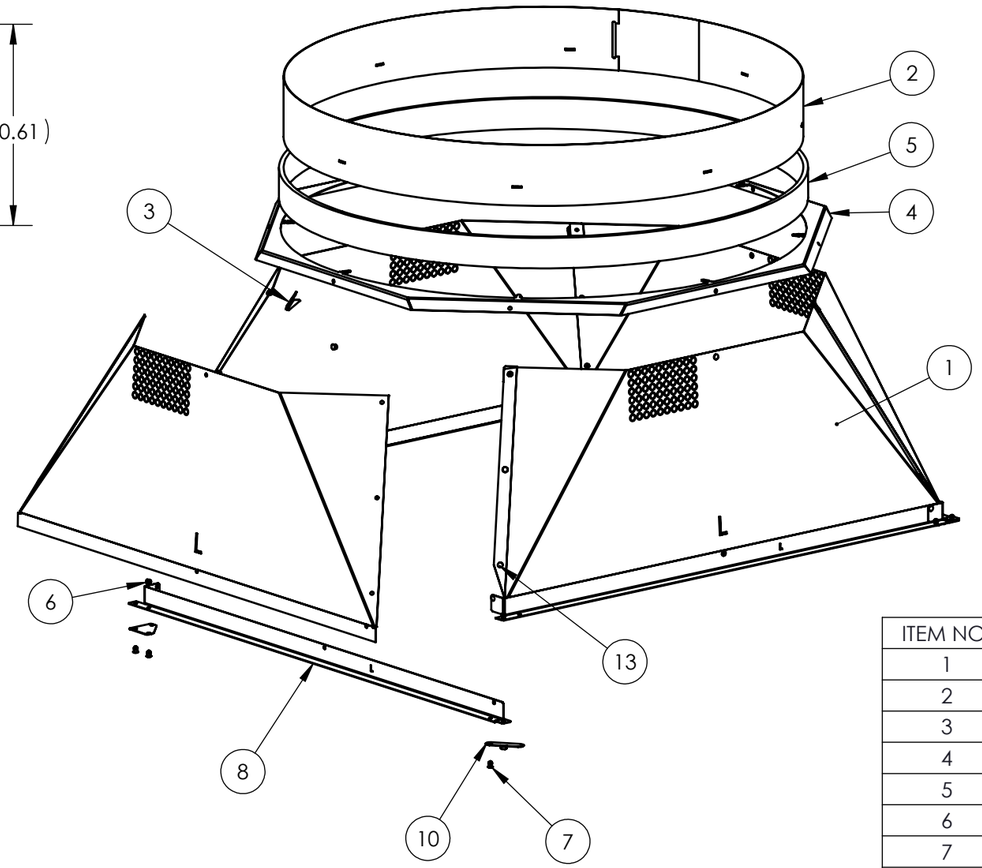


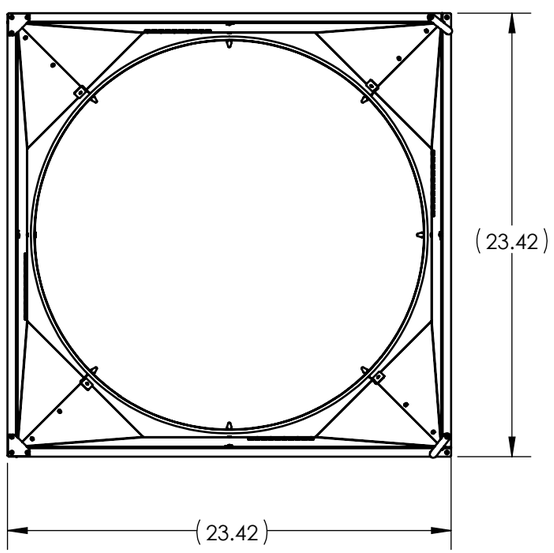


| ITEM NO. | QTY. | PART NO. | DESCRIPTION |
|---|---|---|---|
| 1 | 4 | 410975 | TRANS PANEL DIMPLED 330/750 DS |
| 2 | 1 | 402215 | TRANSITION ADAPTER BAND 330/750 DS |
| 3 | 4 | 701210 | CLIP NAT EFF LENS METAL TRANSITION |
| 4 | 1 | 402230 | TRANSITION BOX CAP 330/750 DS |
| 5 | 5.5 LF | 600590 | FOAM SEAL RECTANGLE |
| 6 | 24 | 700635 | RIVET 1/8 X 1/4 BLIND, MULTI |
| 7 | 10 | 701180 | RIVET 1/8 X 1/4 BLIND, MULTI WHITE |
| 8 | 4 | 402540 | TRANSITION TRIM COMM METRIC |
| 9 | 2 | 402145 | TRANSITION TRIM CORNER BRACE METRIC |
| 10 | 2 | 402210 | TRANSITION TRIM LEVER METRIC |
| 11 | 17.16 LF | 620150 | TAPE FOIL, ROLL 50M (NOT SHOWN) |
| 12 | 1 | 501820 | LABEL LITD ROLL (NOT SHOWN) |

**UNLESS OTHERWISE SPECIFIED:**

TOLERANCES
ANGULAR: ±0.5°

| INCH | MILLIMETER |
|---|---|
| .X ± .06 | [.X] ± 1.5 |
| .XX ± .01 | [.XX] ± .25 |
| .XXX ± .005 | [.XXX] ± .125 |

MATERIAL
--
--

FINISH
--
--

**DO NOT SCALE DRAWING**

**PROPRIETARY AND CONFIDENTIAL**

THE INFORMATION CONTAINED IN THIS DRAWING IS THE SOLE PROPERTY OF SOLATUBE. ANY REPRODUCTION IN PART OR AS A WHOLE WITHOUT THE WRITTEN PERMISSION OF SOLATUBE IS PROHIBITED.

DRAWN BY: STEVENS — DATE: 30 AUG 16
CHECKED BY: -- — DATE: --

INTERPRET DRAWINGS IAW:
ASME Y14.5 - 1994

SOLATUBE®
2210 OAK RIDGE WAY
VISTA, CALIFORNIA 92081-8341
PH (760) 597-4400

TITLE:
# GEN 2 TRANSITION BOX 330/750 DS METRIC

| SIZE | PROJECTION | DWG. NO. | REV |
|---|---|---|---|
| B | (3rd) | 402030 | D |
| | UNIT MM[INCH] | SCALE: 1:12 | SHEET 1 OF 1 |

# 330 DS SOLATUBE POLYMERIC ROUND TO SQUARE TRANSITION CLOSED CEILING

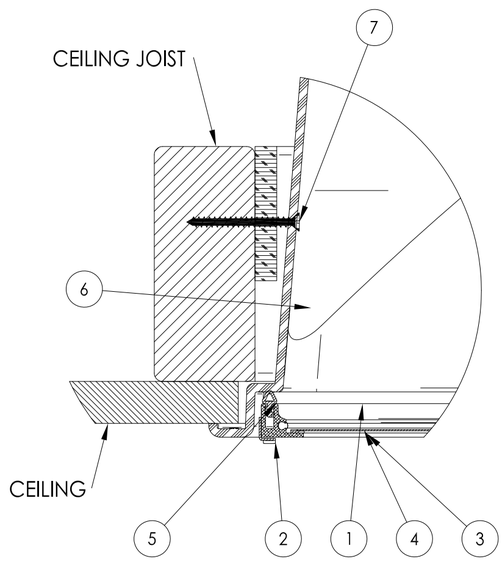


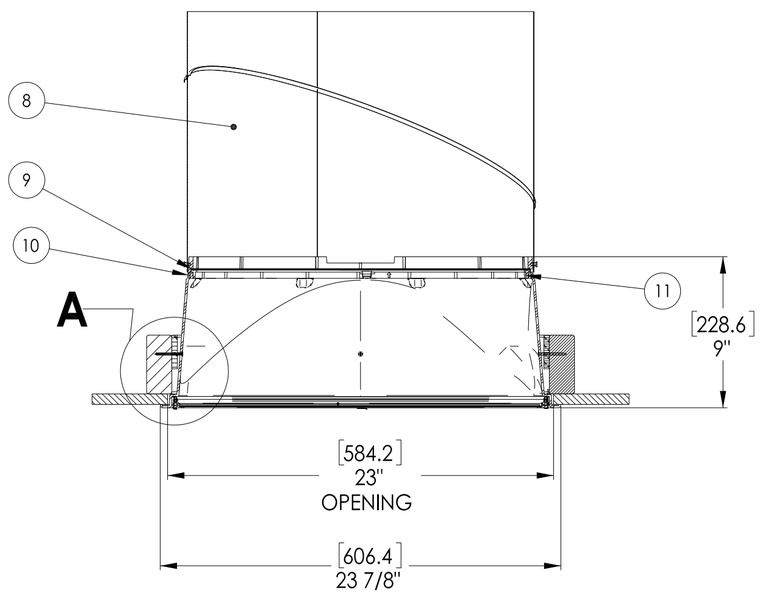


| ITEM NO. | QTY. | PART NO. | DESCRIPTION |
|---|---|---|---|
| 1 | 4 | 400910 | ALUM FRAME 21-C EXTRUSION |
| 2 | 4 | 520060 | CLIP 21" DIFFUSER FRAME |
| 3 | 1 | 601050 | TAPE FOAM 21" DIFFUSER |
| 4 | 1 | 400942 | DIFFUSER PANEL 21" SQ |
| 5 | 1 | 620090 | SQUARE DIFFUSER SEAL EPDM |
| 6 | 1 | 401880 | RTS TRANSITION 21" |
| 7 | 4 | 700485 | SCREW, DRYWALL #6 X 1.58" DRILL TIP |
| 8 | 1 | 301730 | TUBE 21" BOTTOM |
| 9 | 1 | 400150 | RTS NATURAL EFFECT LENS |
| 10 | 1 | 600260 | RTS SEAL EFFECT LENS |
| 11 | 1 | 401070 | RTS SUPPORT EFFECT LENS |
| 12 | 6 | 400795 | RTS TAB EFFECT LENS (NOT SHOWN) |

## DETAIL A
## SCALE 4 : 1

**330 DS (21") SOLATUBE ASSEMBLY & DETAILS**

DWG. NO. **330-FBC** REV **1**

SCALE: 1:1 SHEET 1 OF 3

# 330 DS SOLATUBE ROUND CLOSED CEILING

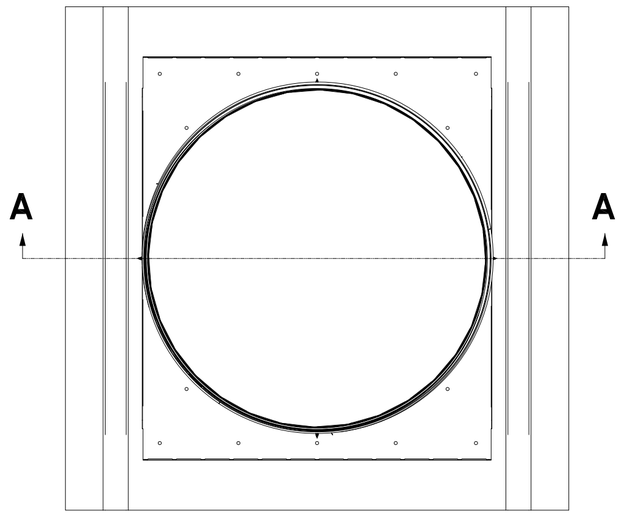


HARD CEILING

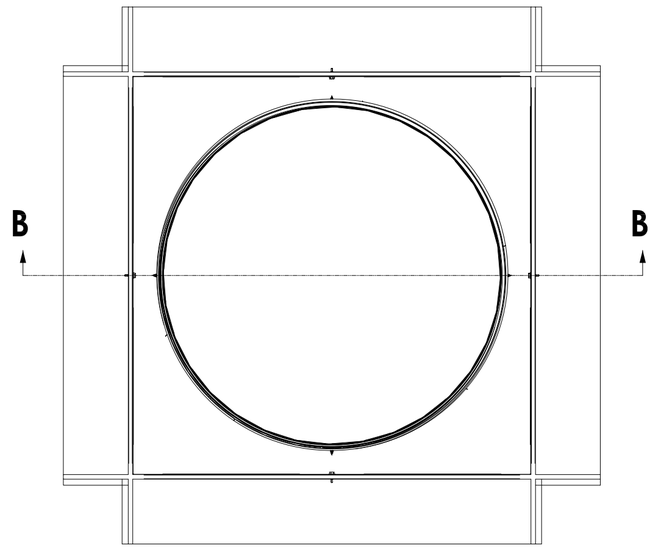


SUSPENDED CEILING

| ITEM NO. | QTY. | PART NO. | DESCRIPTION | MATERIAL; |
|---|---|---|---|---|
| 1 | 1 | 595703 | MOUNT PLATE MS 330DS-C | STEEL |
| 2 | 1 | 595735 | MOUNT HOUSING 330DS-C | STEEL |
| 3 | 3 | 700231 | SPRING RETAINER | STEEL |
| 4 | 4 | 503440 | SCREW #8 X 9/16 PH, PIERCE, DACRO | STEEL |
| 5 | 1 | 410206 | DIFFUSER HOUSING 330 DS-C COATED | STEEL |
| 6 | 1 | 410204 | DIFFUSER FACE 330DS-C COATED | STEEL |
| 7 | 3 | 700228 | SPRING LOCK | STEEL |
| 8 | 2 | 601050 | TAPE FOAM 21" DIFFUSER | FOAM |
| 9 | 1 | 600456 | L SEAL 330DS-C DIFFUSER | FOAM |
| 10 | 1 | 420246 | DIFF PANEL 330/750 DS-C RND OPT W | PMMA |
| 11 | 3 | 520026 | TORSION SPRING | STEEL |
| 12 | 1 | 400150 | RTS NATURAL EFFECT LENS | PMMA |
| 13 | 1 | 600260 | RTS SEAL EFFECT LENS | PMMA |
| 14 | 1 | 401070 | RTS SUPPORT EFFECT LENS | PMMA |
| 15 | 1 | 301730 | TUBE 21" BOTTOM | ALUM LAMINATE |
| 16 | 1 | 595720 | MOUNT PLATE | STEEL |

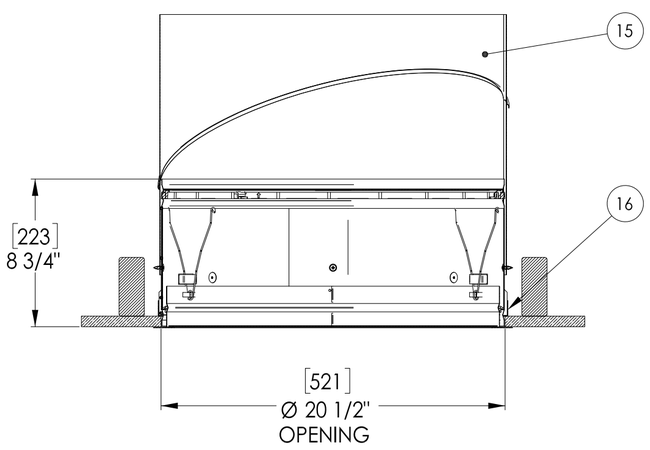


SECTION A-A

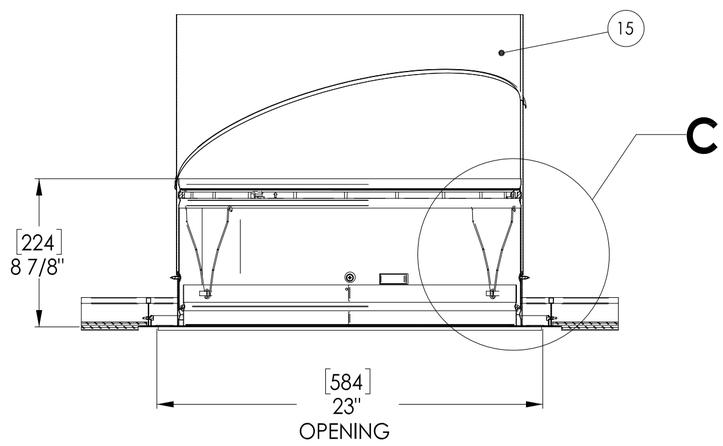


SECTION B-B

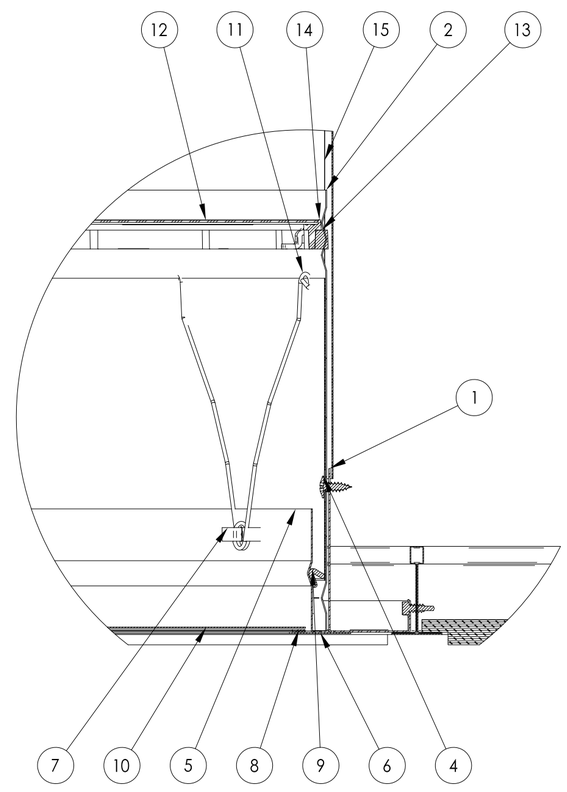


DETAIL C
SCALE 3 : 1

| 330 DS (21") SOLATUBE ASSEMBLY & DETAILS | |
|---|---|
| DWG. NO. 330-FBC | REV 1 |
| SCALE: 1:1 | SHEET 2 OF 3 |

# 330 DS SOLATUBE ROUND
# OPEN CEILING

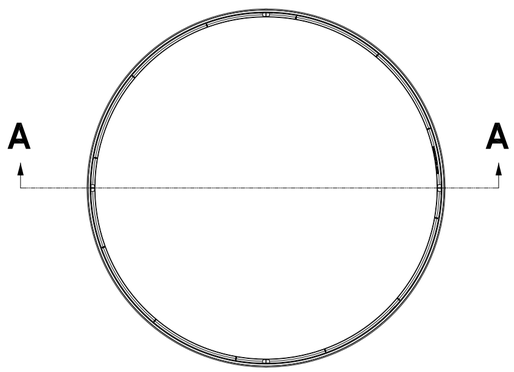


| ITEM NO. | QTY. | PART NO. | DESCRIPTION | MATERIAL |
|---|---|---|---|---|
| 1 | 1 | 301770 | TUBE 21" EXTENSION 24" | ALUM. LAMINATE |
| 2 | 1 | 600250 | FOAM SEAL | FOAM |
| 3 | 1 | 401960 | DRESS RING 21 INCH WHS | PMMA |
| 4 | 1 | 410040 | 21" DIFF LENS PRISMATIC | PMMA |

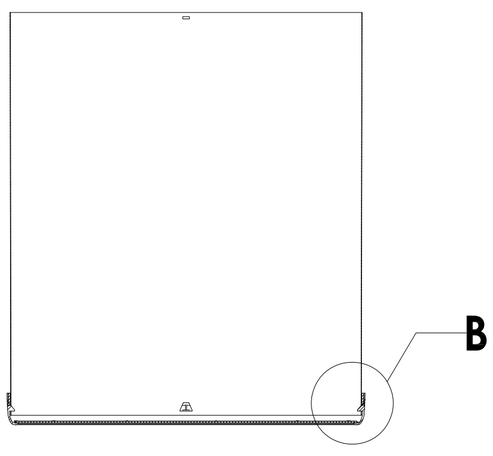


**SECTION A-A**

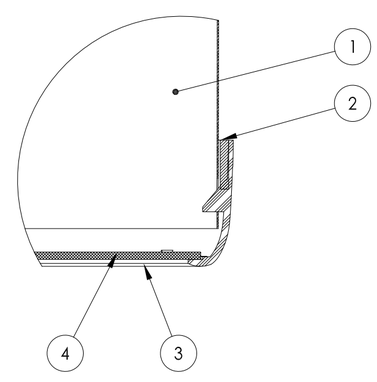


**DETAIL B**
**SCALE 4 : 1**

| 330 DS (21") SOLATUBE ASSEMBLY & DETAILS | |
|---|---|
| DWG. NO. 330-FBC | REV 1 |
| SCALE: 1:1 | SHEET 3 OF 3 |