750 DS (21") SOLATUBE CURB-MOUNT FLASHING HARD CEILING

NOTES:

1. STRUCTURAL ELEMENTS (PLYWOOD, RAFTERS, DRYWALL ETC.) BY OTHERS & SHOWN FOR REFERENCE ONLY.
2. ALL TUBE JOINTS & SEAMS TAPED WITH 2" FOIL TAPE (NOT SHOWN).

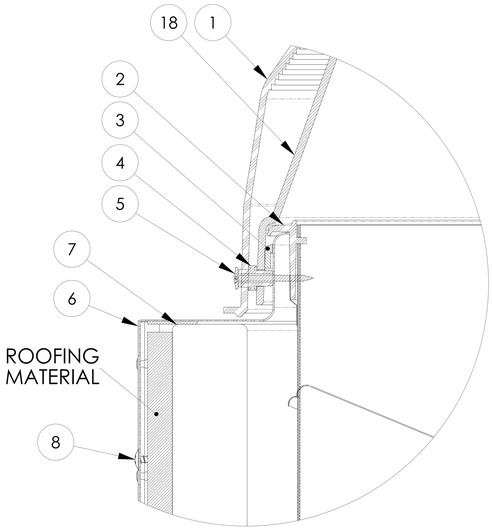

DETAIL A
SCALE 3 : 1

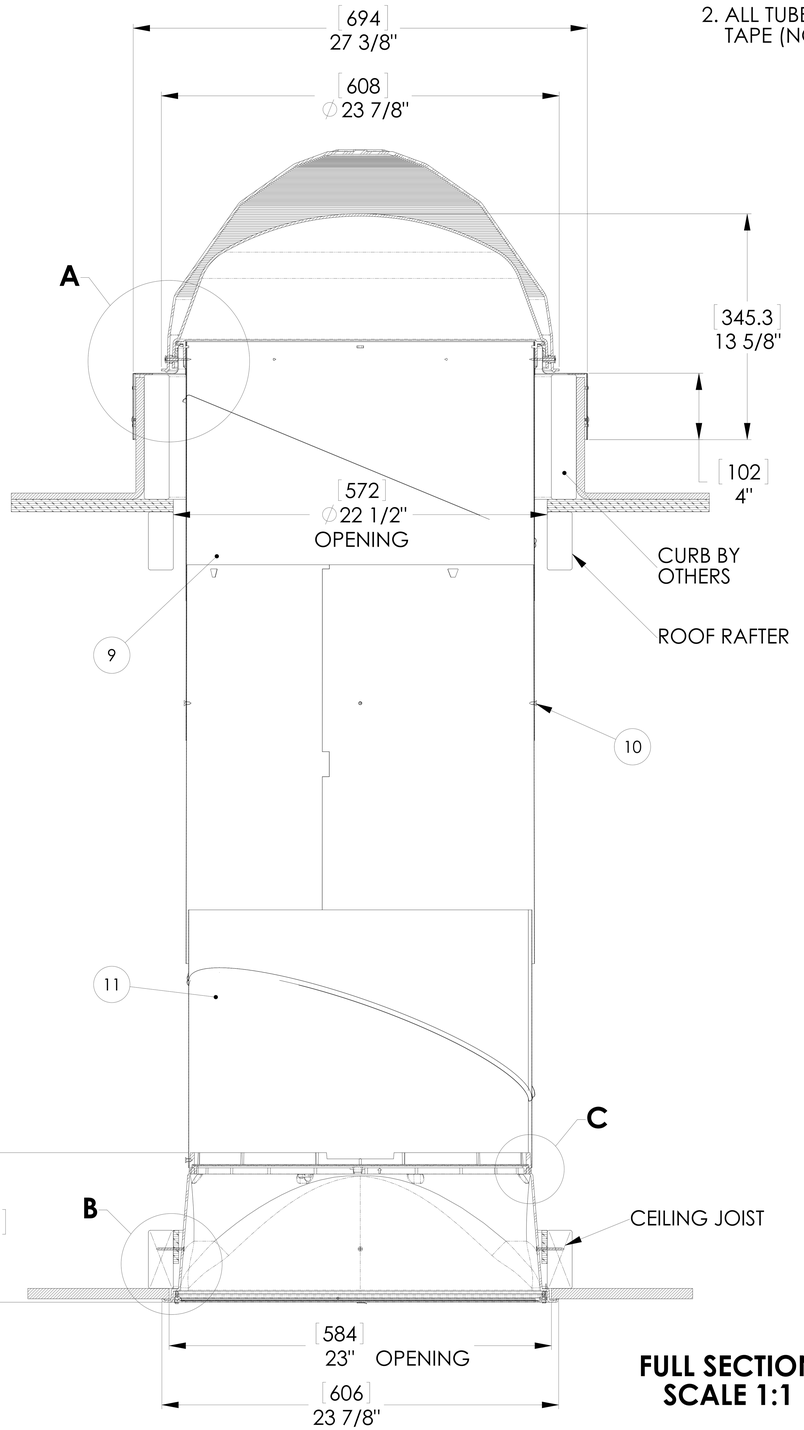

FULL SECTION
SCALE 1:1

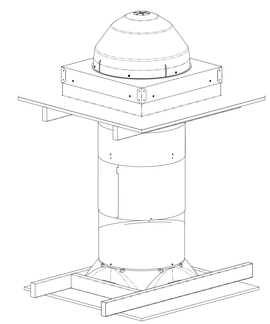

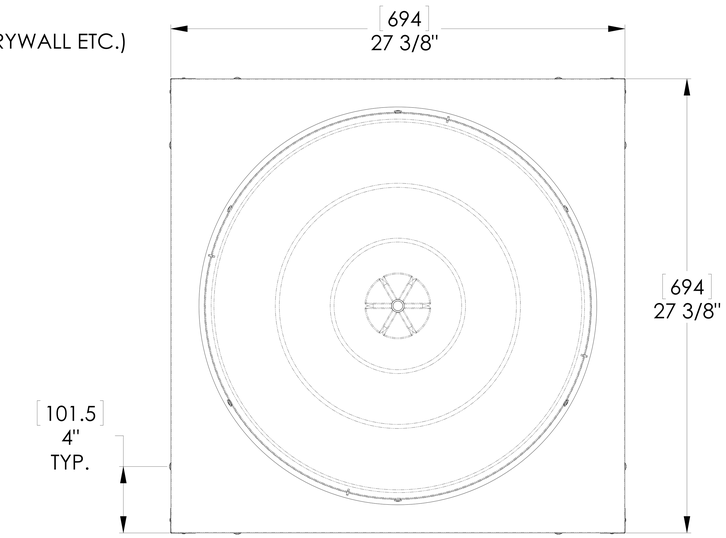

TOP VIEW
SCALE 1:1

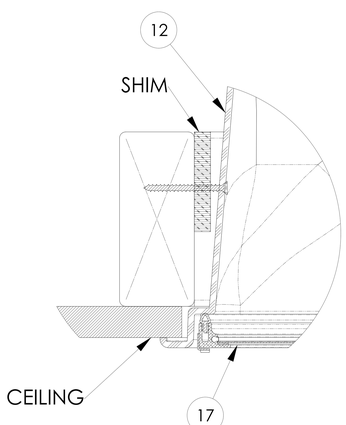

DETAIL B
SCALE 3 : 1

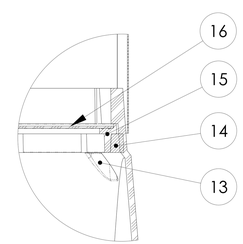

DETAIL C
SCALE 3 : 1

ITEM NO.	QTY.	PART NO.	DESCRIPTION	NOTES
1	1	401930	DOME 750 DS	
2	1	400781	DOME RING 330 DS	
3	1	620120	PILE WEATHERSTRIP SEAL	
4	3	700870	SPACER	
5	3	700860	SCREW #8x1.5" SMS	
6	1	230640	FLASHING CURB STAMPED	
7	1	700280	SEALANT URETHANE	AS REQUIRED
8	8	700480	SCREW #10 X 2" SMS	
9	1	300710	TOP TUBE	
10	1	301770	TUBE 24" EXTENSION	
11	1	301730	TUBE BOTTOM	
12	1	401880	RTS TRANSITION	
13	6	400795	RTS LENS TAB	USED IN 420220 ASSEMBLY
14	1	600260	LENS SEAL	USED IN 420220 ASSEMBLY
15	1	401070	LENS RETAINER RING	USED IN 420220 ASSEMBLY
16	1	400150	NATURAL EFFECTS LENS	USED IN 420220 ASSEMBLY
17	1	402010/20	DIFFUSER FRAME ASSEMBLY	VUSION OR OPTIVIEW
OPTIONAL COMPONENTS				
18	1	509100	DOME 330 DS	

UNLESS OTHERWISE SPECIFIED:
DIMENSIONS ARE IN INCHES
TOLERANCES:
ANGULAR: ±0.5°
.X ± .1
.XX ± .02
.XXX ± .005

MATERIAL --
--

FINISH --

DO NOT SCALE DRAWING

SOLATUBE INTERNATIONAL, INC.
COPYRIGHT 2002
WWW.SOLATUBE.COM

DRAWN BY STEVENS — DATE 10/9/15
CHECKED BY -- — DATE --
APPROVED BY -- — DATE --

SOLATUBE
2210 OAK RIDGE WAY
VISTA, CALIFORNIA 92081-8341
PH (760) 597-4400

TITLE: **750 DS (21") CURB FLASHING HARD CEILING**

SIZE | DWG. NO. **750DS-CF-HC** | REV **1**
SCALE: 1:1 | SHEET 1 OF 1

750 DS (21") SOLATUBE
8" SELF FLASHING
HARD CEILING

NOTES:

1.STRUCTURAL ELEMENTS (PLYWOOD, RAFTERS, DRYWALL ETC.) BY OTHERS & SHOWN FOR REFERENCE ONLY

2. ALL TUBE JOINTS & SEAMS TAPED WITH 2" FOIL TAPE (NOT SHOWN)

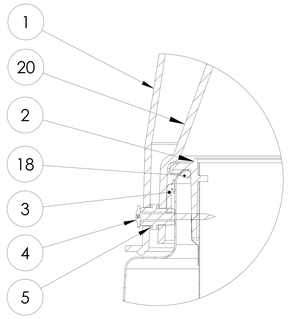

DETAIL A
SCALE 3 : 1

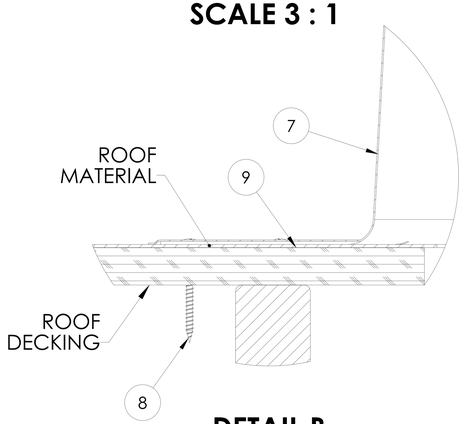

DETAIL B
SCALE 3 : 1

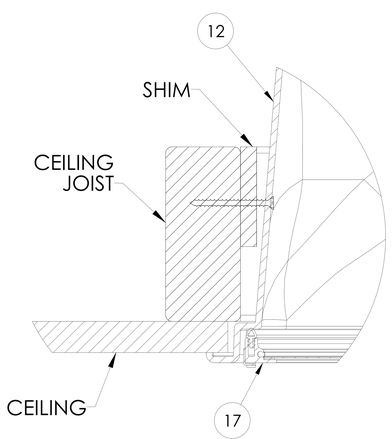

DETAIL C
SCALE 3 : 1

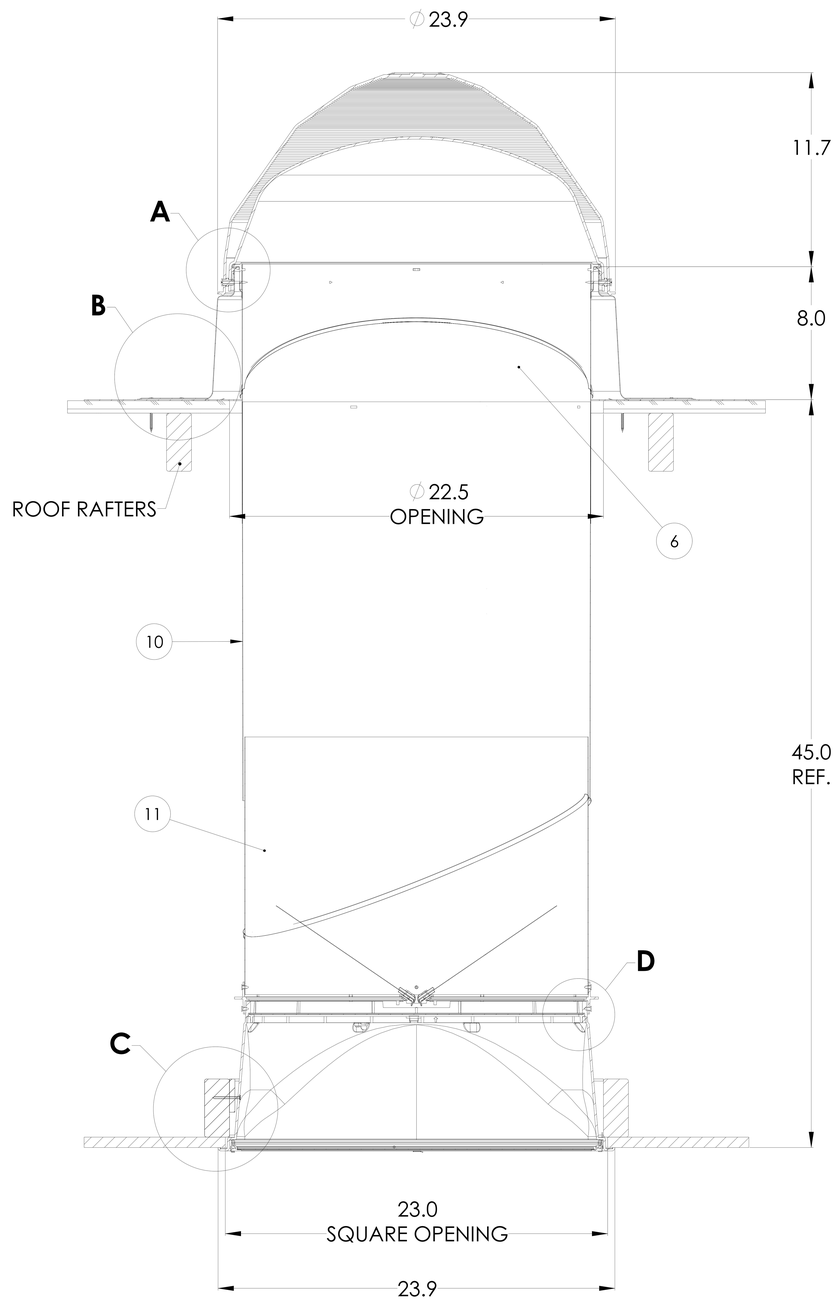

FULL SECTION
SCALE 1:1

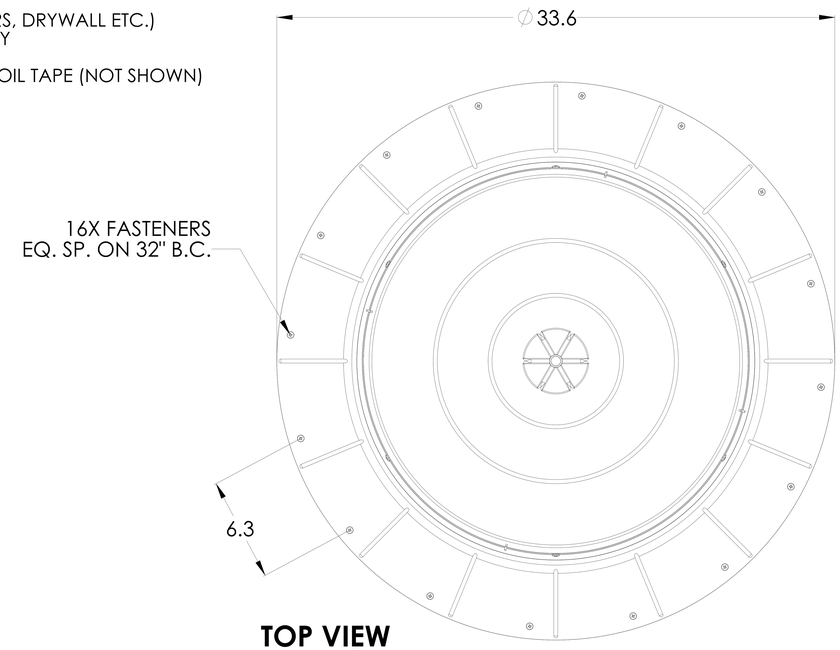

TOP VIEW
SCALE 1:1

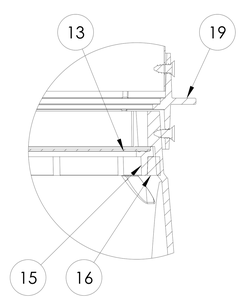

DETAIL D
SCALE 3 : 1

ITEM NO.	QTY.	PART NO.	DESCRIPTION	NOTES
1	1	401930	PRISMATIC DOME 750 DS	
2	1	400785	TUBE RING	
3	1	600280	PILE WEATHER STRIP	
4	6	700860	SCREW #8x1.5" SMS	
5	6	700870	SPACER	
6	1	301710	TOP ANGLE ADAPTER TUBE	
7	1	200870	FLASHING 8" HIGH	
8	16	700480	SCREW #10 X 2" SMS	20 QTY. REQUIRED FOR HVHZ
9	1	700280	SEALANT URETHANE	
10	1	301770	TUBE 24" EXTENSION	
11	1	301730	BOTTOM ANGLE ADAPTER TUBE	
12	1	401880	RTS TRANSITION	METAL TRANSITION SEE SHEET 3
13	1	400150	NATURAL EFFECTS LENS	
14	8	400795	RTS LENS TAB (NOT SHOWN)	
15	1	401070	LENS RETAINER RING	
16	1	600260	LENS SEAL	
17	1	402010/20	DIFFUSER 21" FRAME ASSY	VUSION OR OPTIVIEW LENS
18	1	600240	GLAZING ROPE	
OPTIONAL COMPONENTS				
ITEM NO.	QTY.	PART NO.	DESCRIPTION	NOTES
19	1	570003	21" DAYLIGHT DIMMER	
20	1	509100	DOME 330 DS	

UNLESS OTHERWISE SPECIFIED:
DIMENSIONS ARE IN INCHES
TOLERANCES:
ANGULAR: ±0.5°
.X ± .1
.XX ± .02
.XXX ± .005

MATERIAL
--
--

FINISH
--

DO NOT SCALE DRAWING

SOLATUBE INTERNATIONAL, INC.
COPYRIGHT 2015
WWW.SOLATUBE.COM

DRAWN BY: STEVENS — DATE: 10/16/15
CHECKED BY: -- — DATE: --
APPROVED BY: -- — DATE: --

SOLATUBE
2210 OAK RIDGE WAY
VISTA, CALIFORNIA 92081-8341
PH (760) 597-4400

TITLE: 750 DS (21") SELF FLASHING HARD CEILING

SIZE
DWG. NO. 750DS-SF-HC
REV 2
SCALE: 1:1
SHEET 1 OF 3

750DS SOLATUBE FLASHINGS

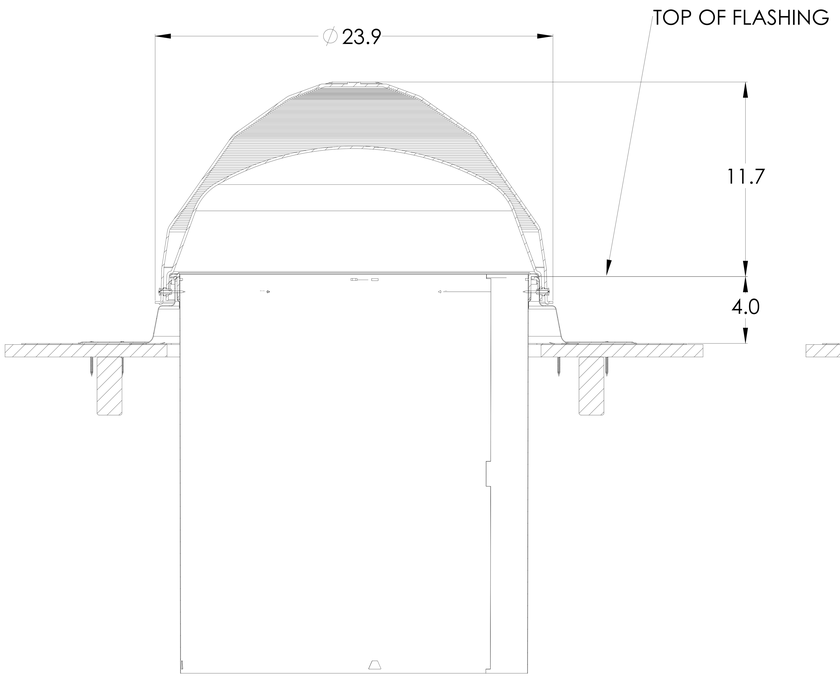

4" HIGH SELF FLASHING

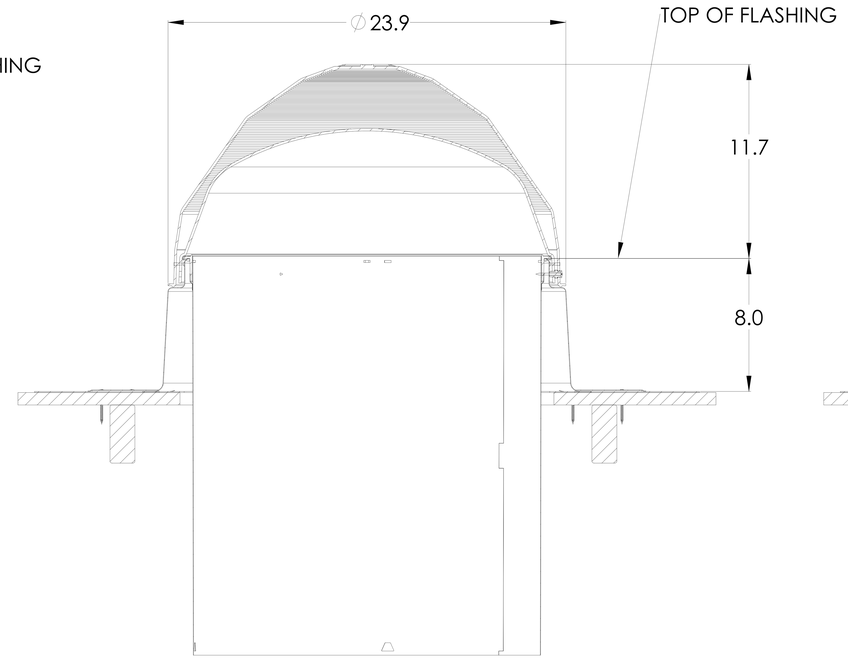

8" HIGH SELF FLASHING

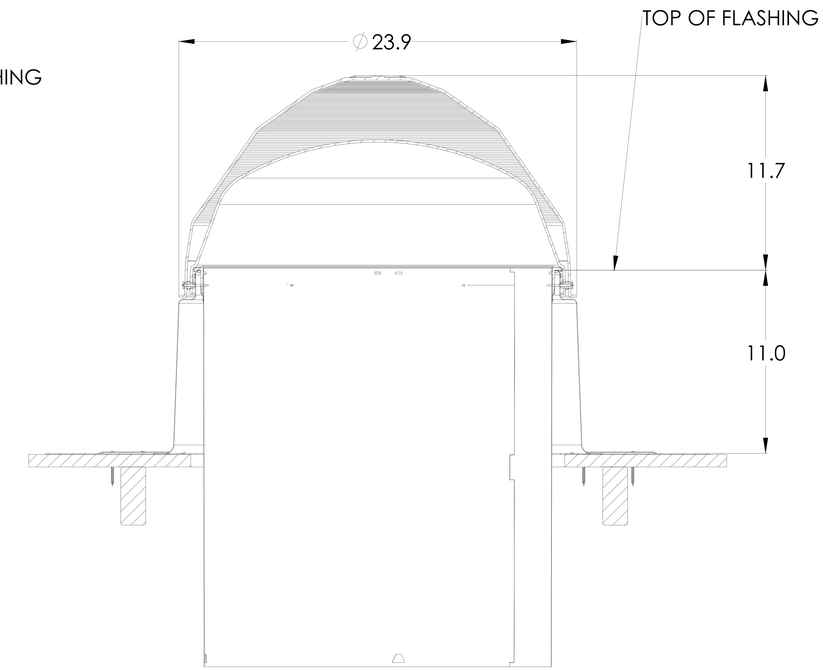

11" HIGH SELF FLASHING

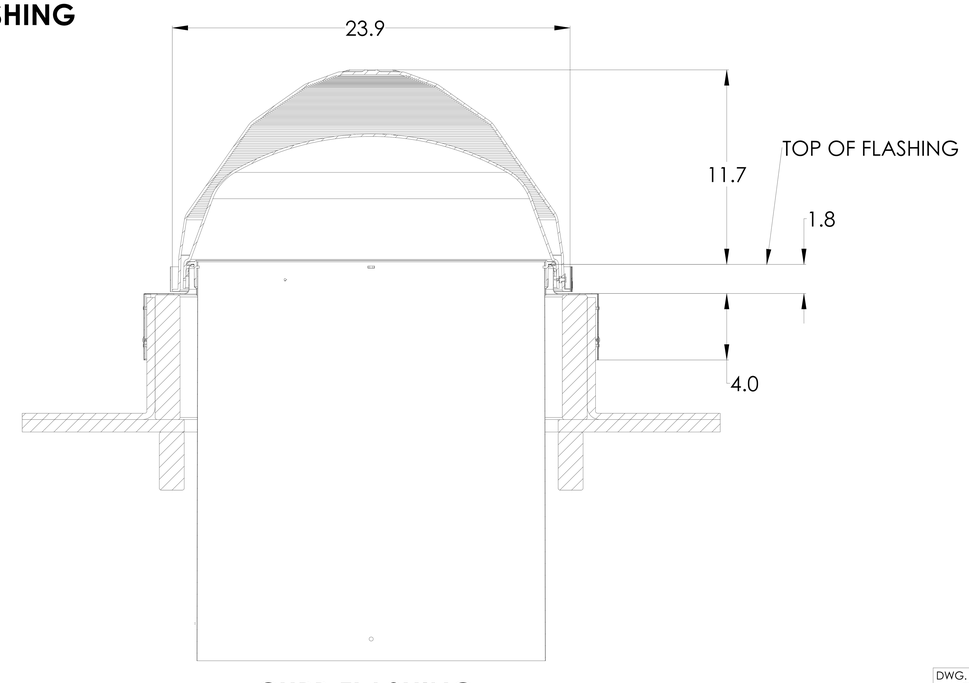

CURB FLASHING

DWG. NO.	REV
750DS-SF-HC	2
SCALE: 1:1	SHEET 2 OF 3

750DS SOLATUBE
METAL
ROUND TO SQUARE

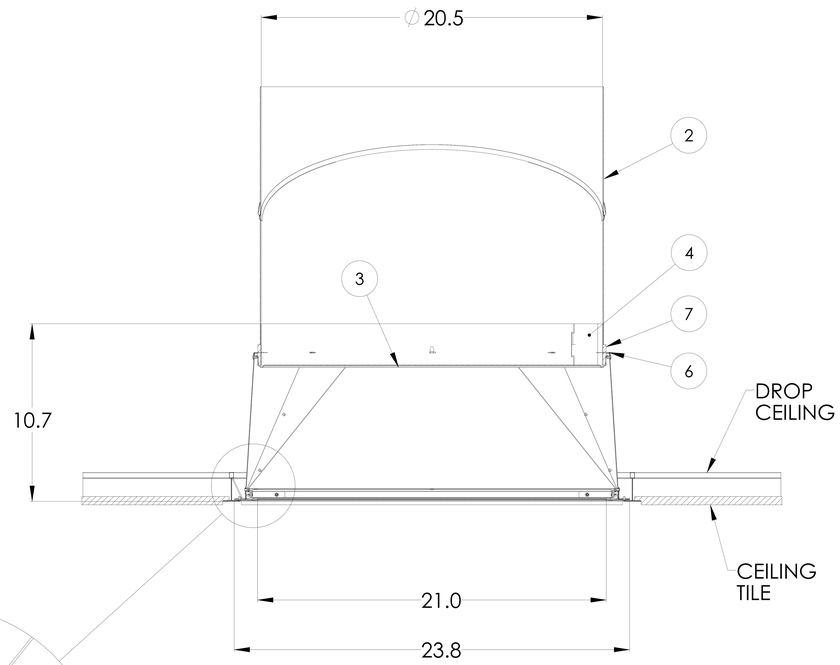

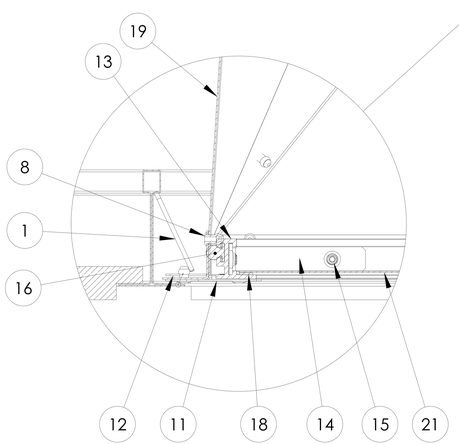

ITEM NO.	QTY.	PART NO.	DESCRIPTION
1	4	520090	CLIP 21" TRANS. HOLD DOWN
2	1	301730	TUBE 21" BOTTOM
3	1	422280	NAT EFFECT LENS 330 DS OTS
4	1	402215	TRANSITION ADAPTER BAND 330/750 DS
5	4	701210	CLIP NAT EFF LENS METAL TRANSITION (NOT SHOWN)
6	1	402230	TRANSITION BOX CAP 330/750 DS
7	1	600590	FOAM SEAL RECTANGLE
8	24	700635	RIVET 1/8 X 1/4 BLIND, MULTI
9	4	402180	TRANSITION TRIM SECTION
10	2	402250	TRANSITION TRIM CORNER BRACE (NOT SHOWN)
11	2	402325	TRANSITION TRIM LEVER
12	10	701180	RIVET 1/8 X 1/4 BLIND, MULTI WHITE
13	4	410475	EXTRUSION ALUM PAINTED MITERED
14	4	701130	CORNER KEY
15	8	701155	SET SCREW 8-32 X 1/8 CUP PT
16	4	600600	FOAM SEAL T-SLOT .250 X .270
17	1	400940	DIFFUSER PANEL (OPTIVIEW)
18	1	620150	TAPE FOAM 21" DIFFUSER
19	4	410775	TRANS PANEL DIMPLED 330/750 DS

DWG. NO.	REV
750DS-SF-HC	2
SCALE: 1:1	SHEET 3 OF 3

REVISIONS				
ECO	REV.	DESCRIPTION	DATE	INC.
	1	INITIAL RELEASE	4/22/08	CS

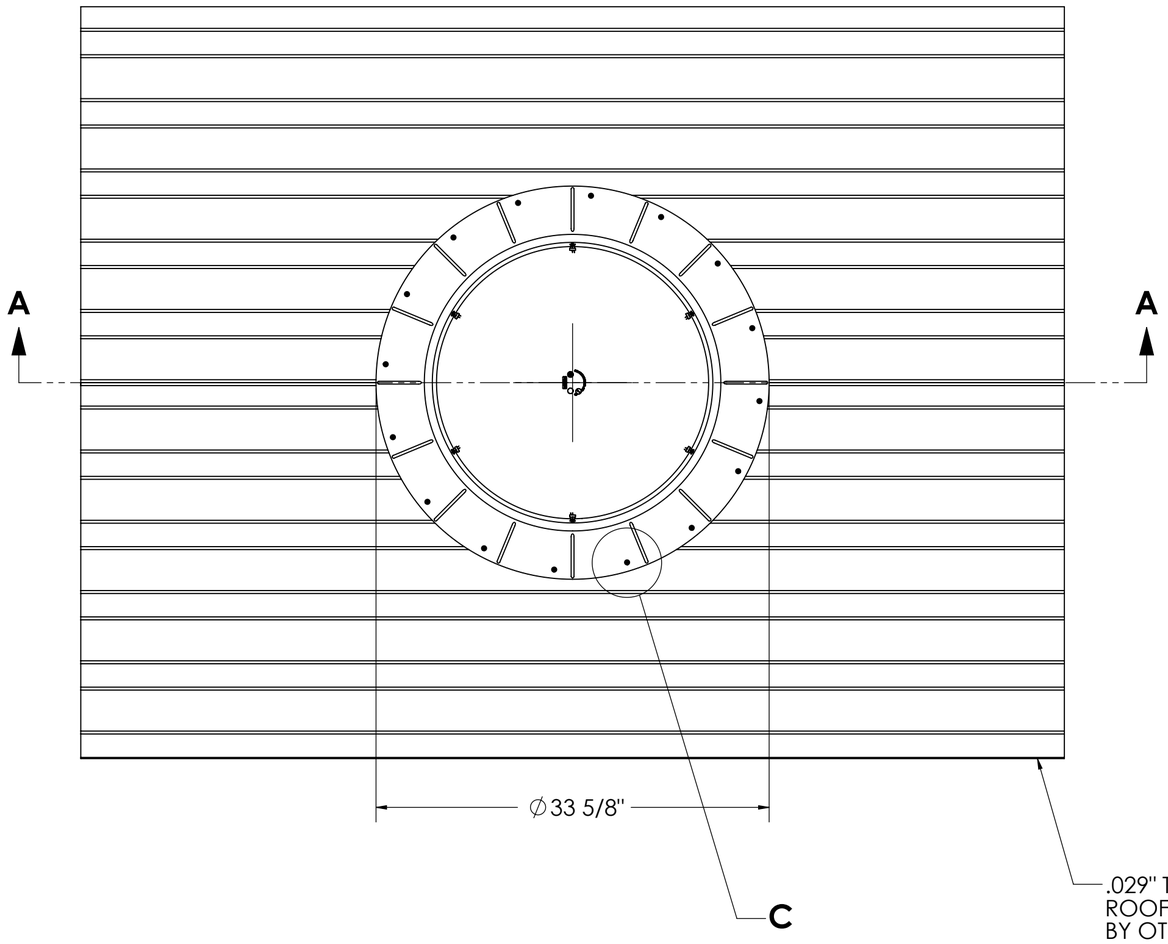

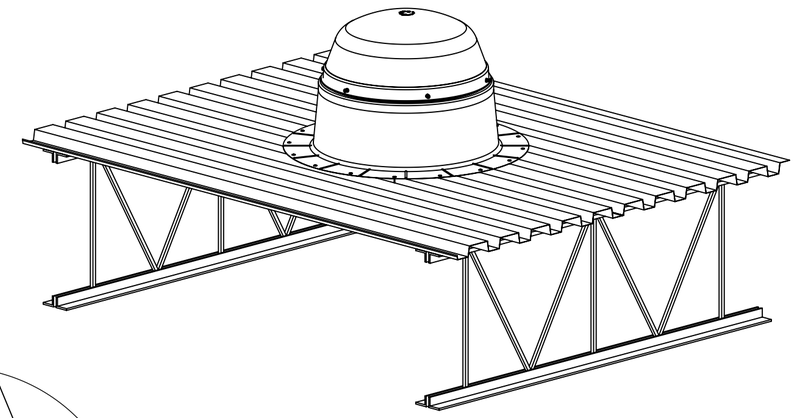

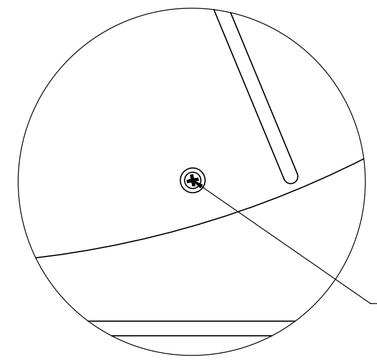

DETAIL C
SCALE 1 : 2

NOTE: THE FREQUENCY OF ALIGNMENT BETWEEN METAL DECK SURFACE AND PRE-PUNCHED FASTENER HOLES MAY VARY FROM 4 TO 16 PLACES (DEPENDING ON FLASHING ORIENTATION).

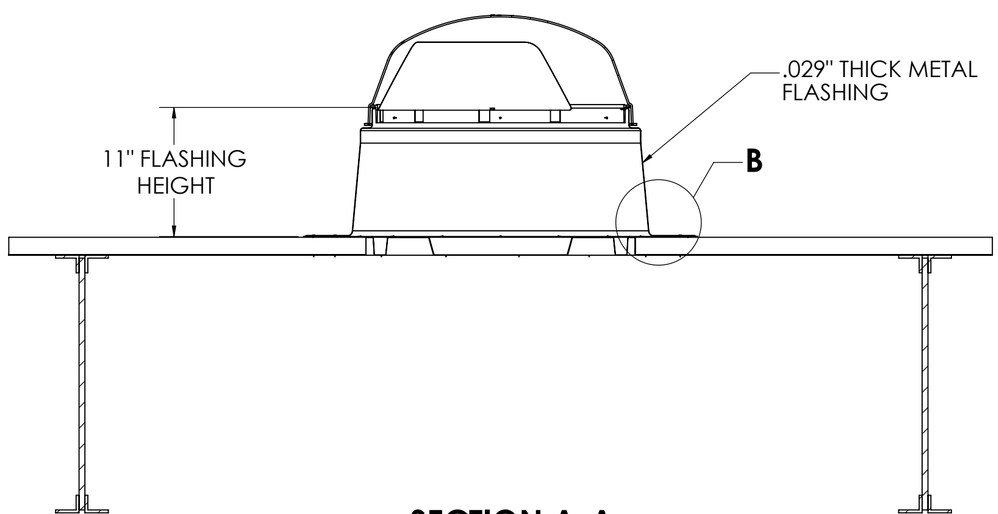

SECTION A-A

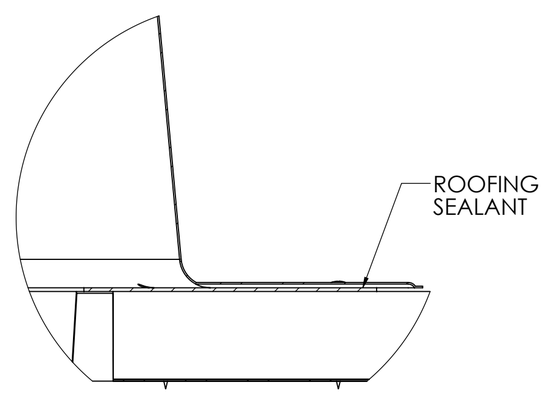

DETAIL B
SCALE 1 : 2

UNLESS OTHERWISE SPECIFIED: DIMENSIONS ARE IN INCHES TOLERANCES: ANGULAR: ±0.5° .X ± .1 .XX ± .02 .XXX ± .005 FRACTION ± 1/64	**PROPRIETARY AND CONFIDENTIAL** THE INFORMATION CONTAINED IN THIS DRAWING IS THE SOLE PROPERTY OF SOLATUBE. ANY REPRODUCTION IN PART OR AS A WHOLE WITHOUT THE WRITTEN PERMISSION OF SOLATUBE IS PROHIBITED.		SOLATUBE® 2210 OAK RIDGE WAY VISTA, CALIFORNIA 92081-8341 PH (760) 597-4400
MATERIAL -- --	DRAWN BY STEVENS	DATE 4/22/08	TITLE: **750 DS** **COMMERCIAL ASSY.**
FINISH --	CHECKED BY --	DATE --	SIZE: **C** / DWG. NO.: **750-11F-BDECK** / REV: **1**
DO NOT SCALE DRAWING	APPROVED BY	DATE	SCALE: 1:10 / SHEET 1 OF 1

REVISIONS				
ECO	REV.	DESCRIPTION	DATE	INC.
	1	INITIAL RELEASE	4/22/08	CS

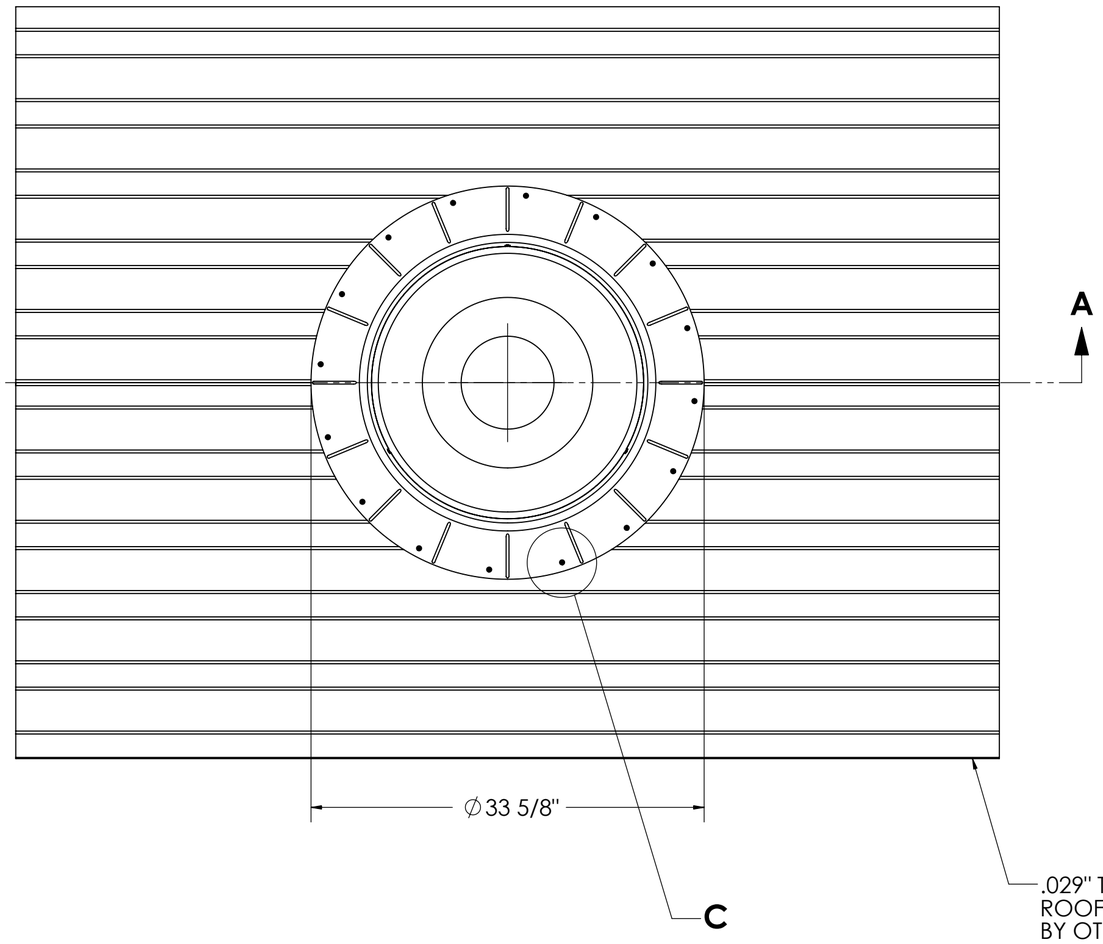

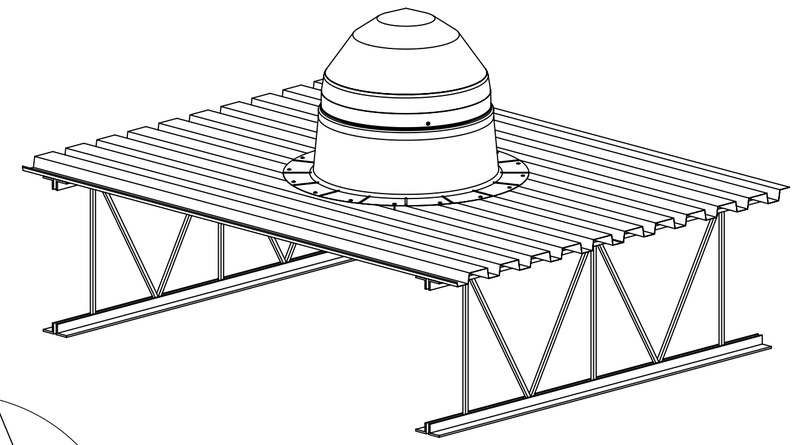

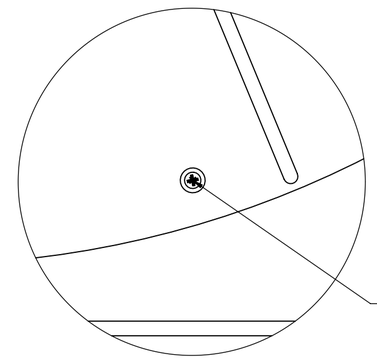

DETAIL C
SCALE 1 : 2

NOTE: THE FREQUENCY OF ALIGNMENT BETWEEN METAL DECK SURFACE AND PRE-PUNCHED FASTENER HOLES MAY VARY FROM 4 TO 16 PLACES (DEPENDING ON FLASHING ORIENTATION).

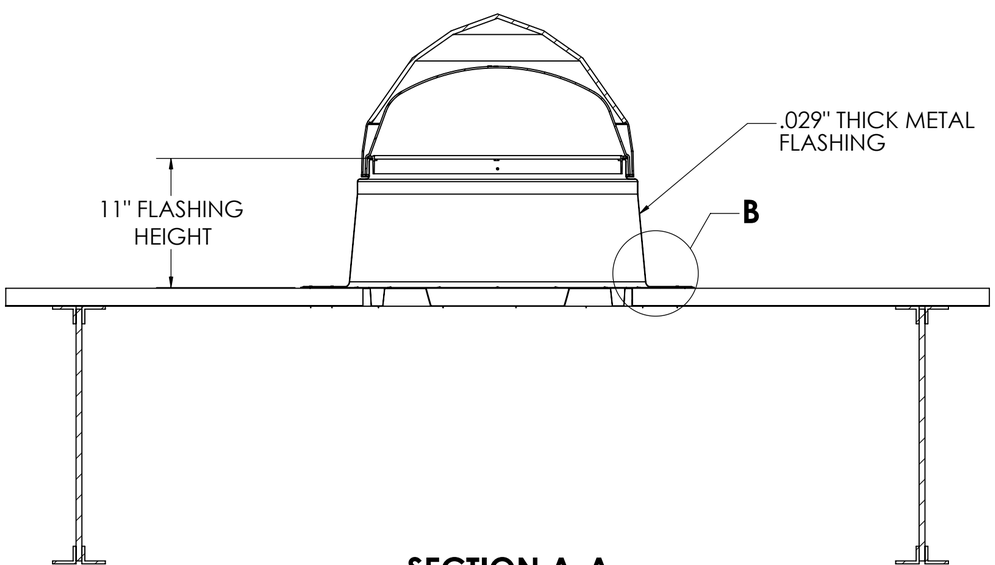

SECTION A-A

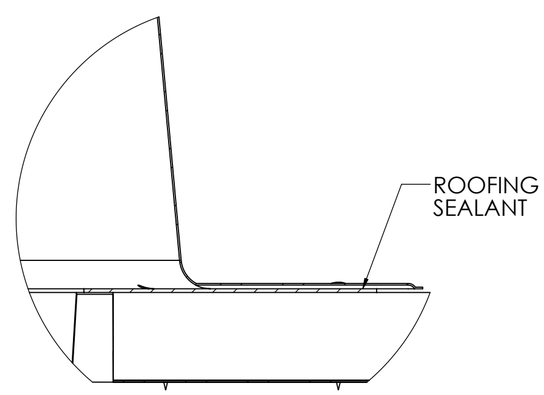

DETAIL B
SCALE 1 : 2

UNLESS OTHERWISE SPECIFIED: DIMENSIONS ARE IN INCHES TOLERANCES: ANGULAR: ±0.5° .X ± .1 .XX ± .02 .XXX ± .005 FRACTION ± 1/64	**PROPRIETARY AND CONFIDENTIAL** THE INFORMATION CONTAINED IN THIS DRAWING IS THE SOLE PROPERTY OF SOLATUBE. ANY REPRODUCTION IN PART OR AS A WHOLE WITHOUT THE WRITTEN PERMISSION OF SOLATUBE IS PROHIBITED.	SOLATUBE® 2210 OAK RIDGE WAY VISTA, CALIFORNIA 92081-8341 PH (760) 597-4400	
MATERIAL -- --	DRAWN BY STEVENS	DATE 4/22/08	TITLE: **750 DS** **TYPE II & III ROOF ASSY.**
FINISH --	CHECKED BY --	DATE --	SIZE **C**
	APPROVED BY	DATE	DWG. NO. **750-11F-TYPE II_III**
DO NOT SCALE DRAWING			REV **1**
			SCALE: 1:10
			SHEET 1 OF 1

REVISIONS				
ECO	REV.	DESCRIPTION	DATE	INC.
	1	INITIAL RELEASE	4/22/08	CS
	2		10/12/2015	CS

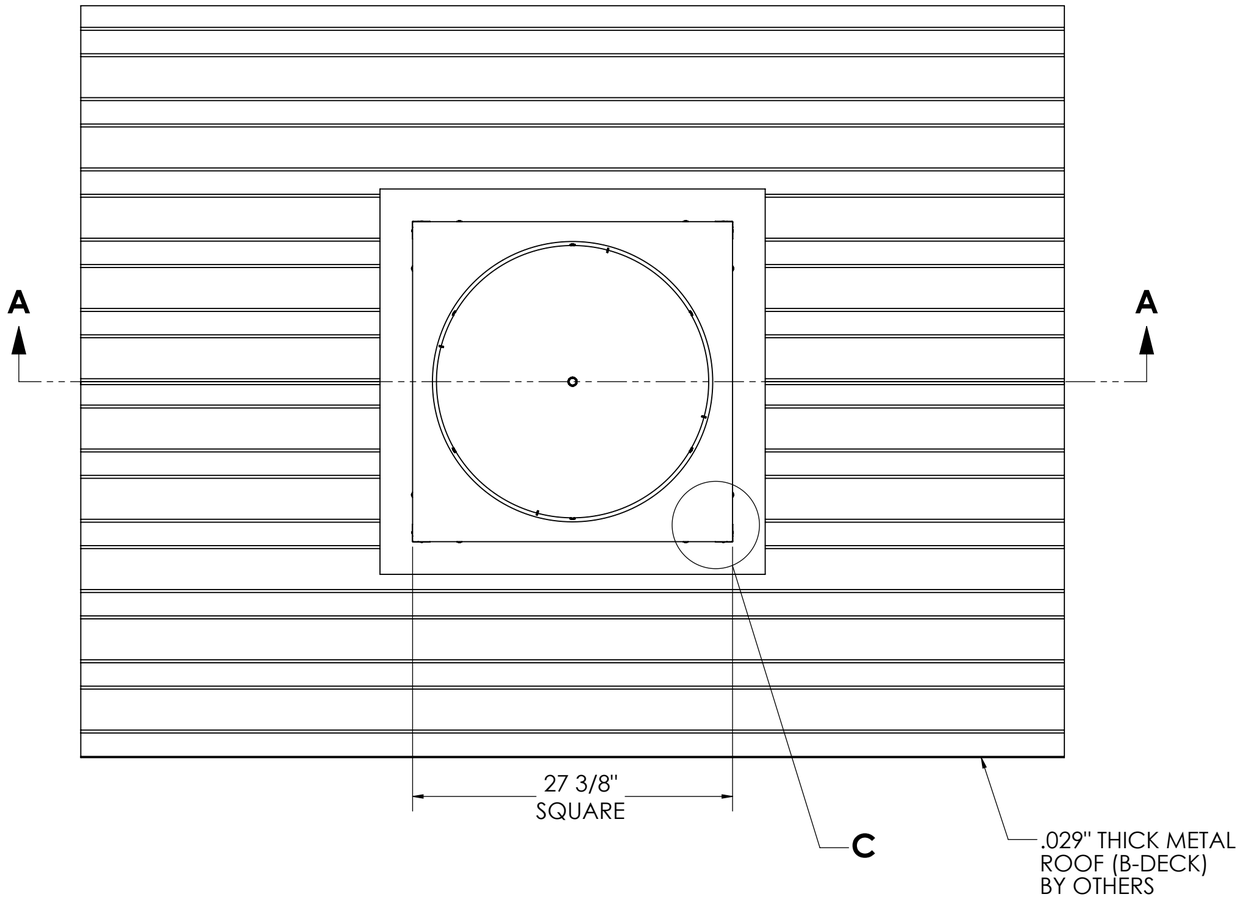

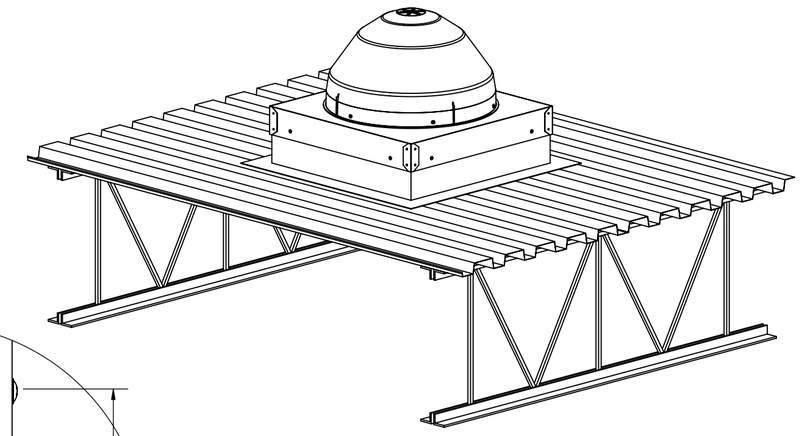

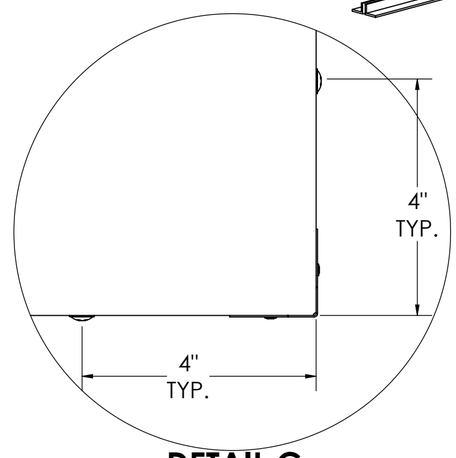

DETAIL C
SCALE 1 : 2

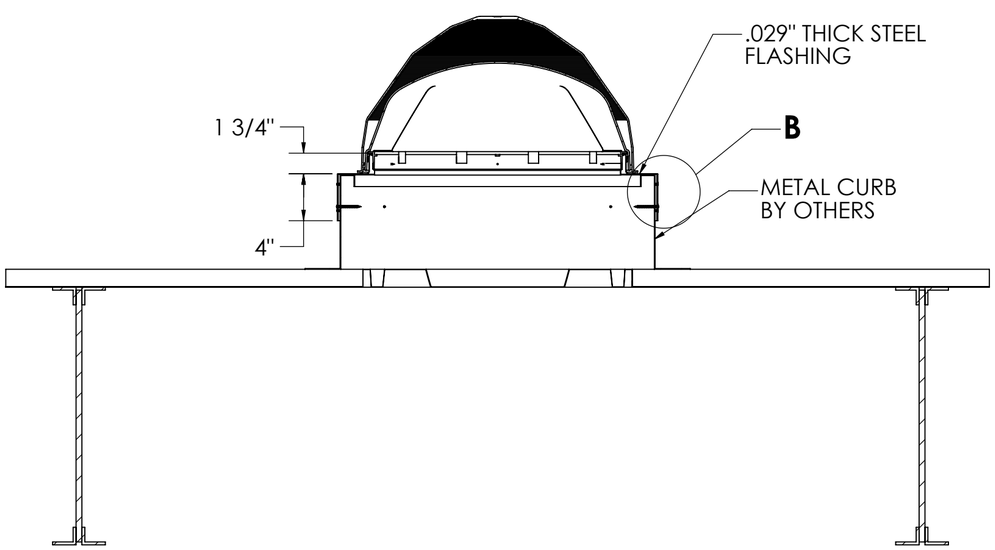

SECTION A-A

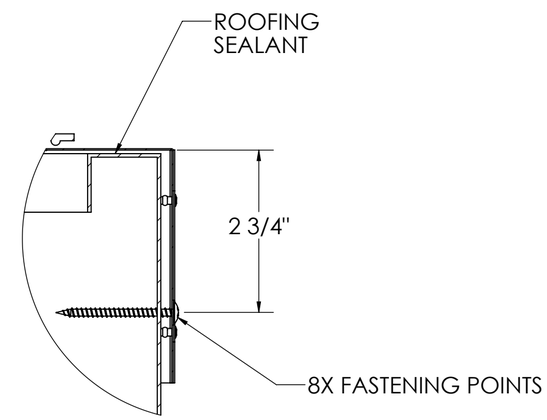

DETAIL B
SCALE 1 : 2

UNLESS OTHERWISE SPECIFIED:	PROPRIETARY AND CONFIDENTIAL		SOLATUBE® 2210 OAK RIDGE WAY VISTA, CALIFORNIA 92081-8341 PH (760) 597-4400	
DIMENSIONS ARE IN INCHES TOLERANCES: ANGULAR: ±0.5° .X ± .1 .XX ± .02 .XXX ± .005 FRACTION ± 1/64	THE INFORMATION CONTAINED IN THIS DRAWING IS THE SOLE PROPERTY OF SOLATUBE. ANY REPRODUCTION IN PART OR AS A WHOLE WITHOUT THE WRITTEN PERMISSION OF SOLATUBE IS PROHIBITED.		TITLE: 750 DS COMMERCIAL ASSY.	
MATERIAL -- --	DRAWN BY STEVENS	DATE 4/22/08		
FINISH --	CHECKED BY --	DATE --	SIZE C	DWG. NO. 750-CURB-BDECK
DO NOT SCALE DRAWING	APPROVED BY	DATE	SCALE: 1:10	SHEET 1 OF 1

REV 2

REVISIONS				
ECO	REV.	DESCRIPTION	DATE	INC.
	1	INITIAL RELEASE	4/22/08	CS
	2		10/12/2015	CS

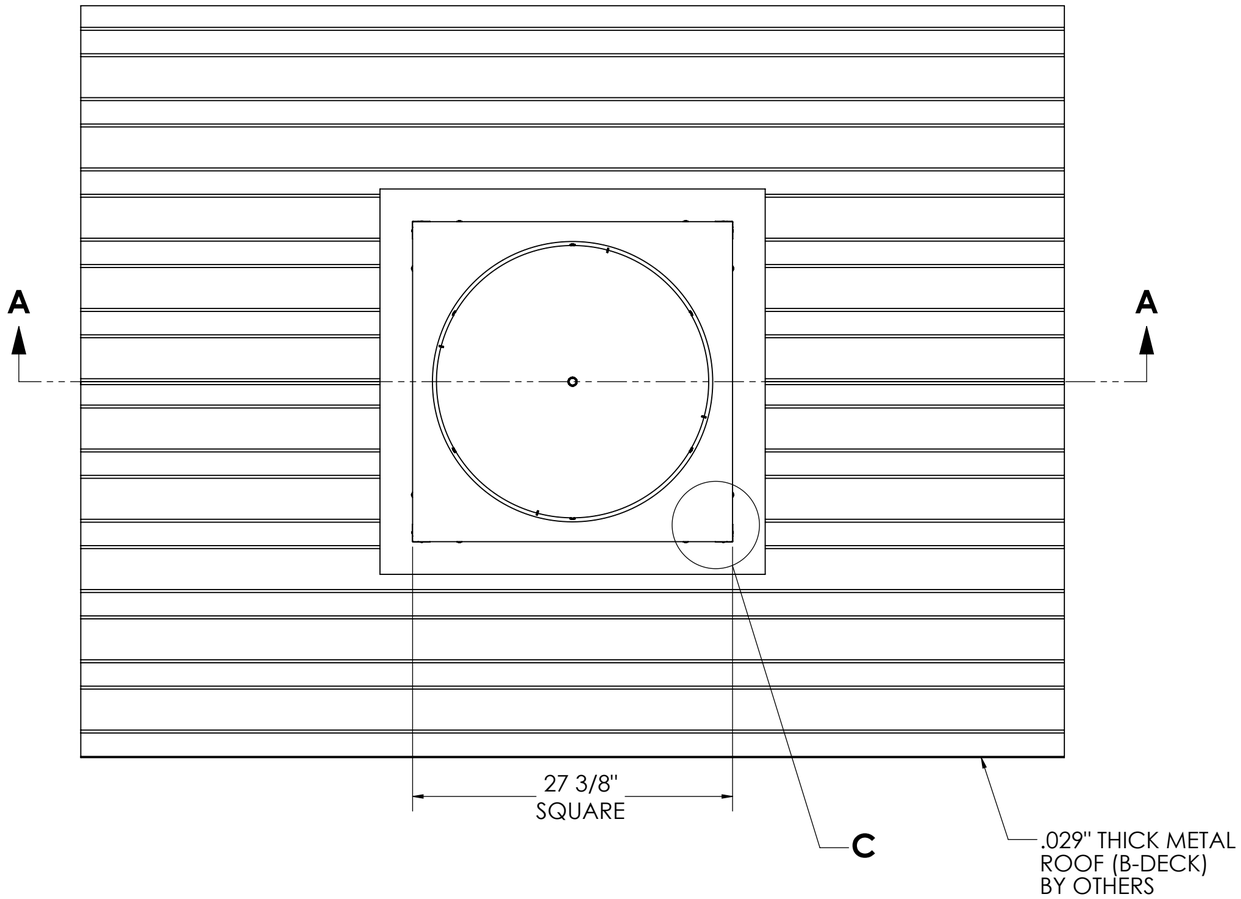

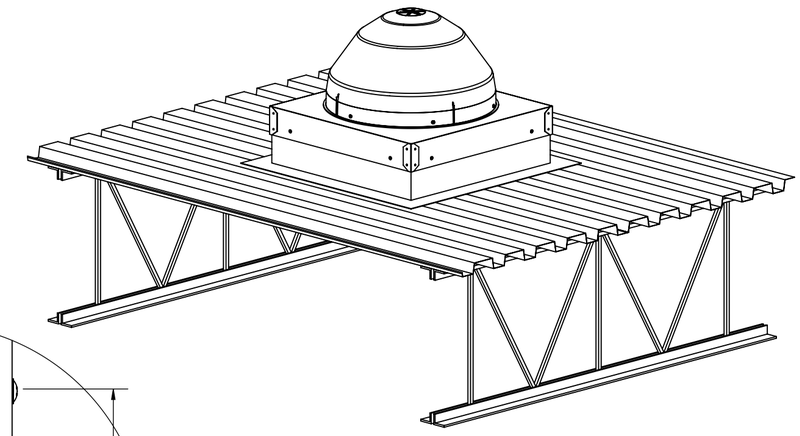

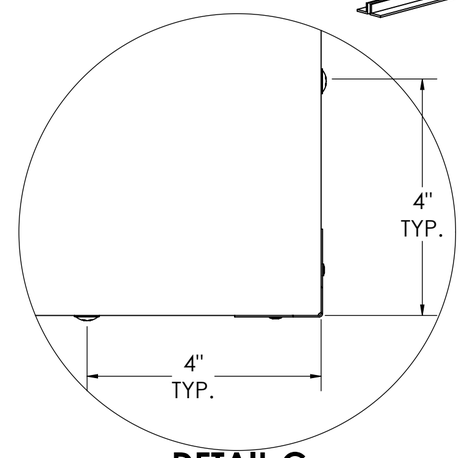

DETAIL C
SCALE 1 : 2

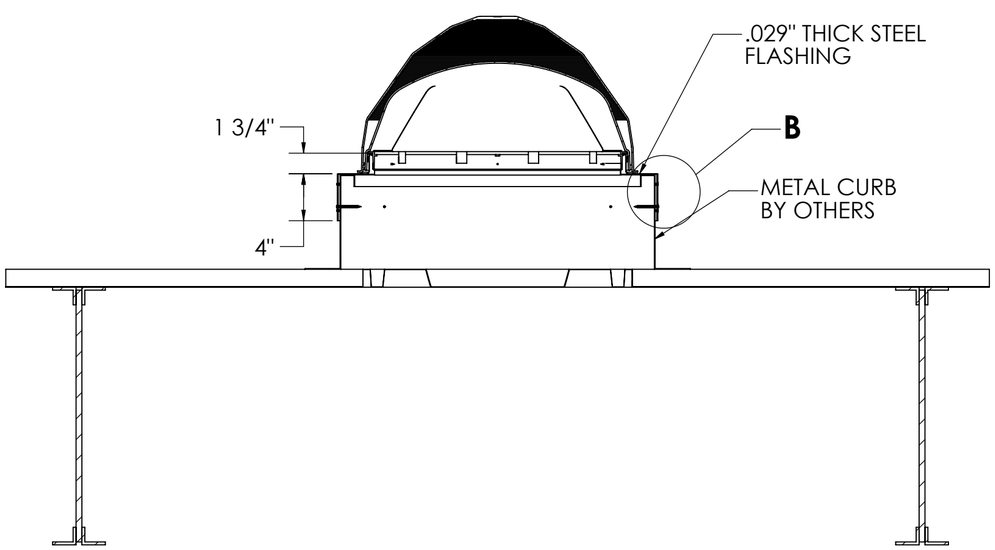

SECTION A-A

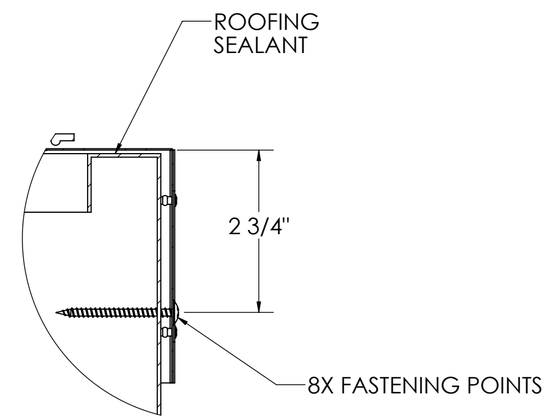

DETAIL B
SCALE 1 : 2

UNLESS OTHERWISE SPECIFIED:	PROPRIETARY AND CONFIDENTIAL		SOLATUBE® 2210 OAK RIDGE WAY VISTA, CALIFORNIA 92081-8341 PH (760) 597-4400	
DIMENSIONS ARE IN INCHES TOLERANCES: ANGULAR: ±0.5° .X ± .1 .XX ± .02 .XXX ± .005 FRACTION ± 1/64	THE INFORMATION CONTAINED IN THIS DRAWING IS THE SOLE PROPERTY OF SOLATUBE. ANY REPRODUCTION IN PART OR AS A WHOLE WITHOUT THE WRITTEN PERMISSION OF SOLATUBE IS PROHIBITED.		TITLE: 750 DS TYPE II & III ROOF ASSY.	
MATERIAL -- --	DRAWN BY STEVENS	DATE 4/22/08		
FINISH --	CHECKED BY --	DATE --	SIZE C	DWG. NO. 750-CURB-TYPE II_III
DO NOT SCALE DRAWING	APPROVED BY	DATE	SCALE: 1:10	SHEET 1 OF 1

REV 2

REVISIONS				
ECO	REV.	DESCRIPTION	DATE	INC.
	1	INITIAL RELEASE	4/30/2008	CS

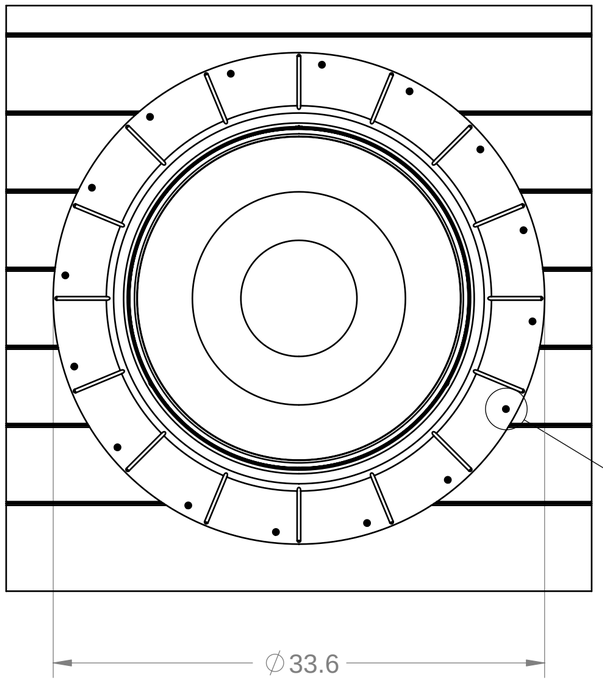

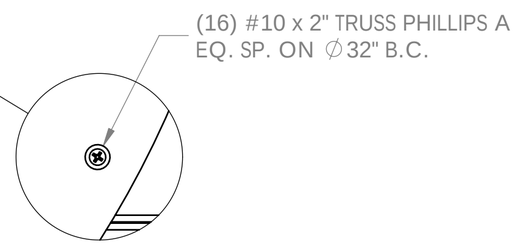

DETAIL C
SCALE 1 : 2

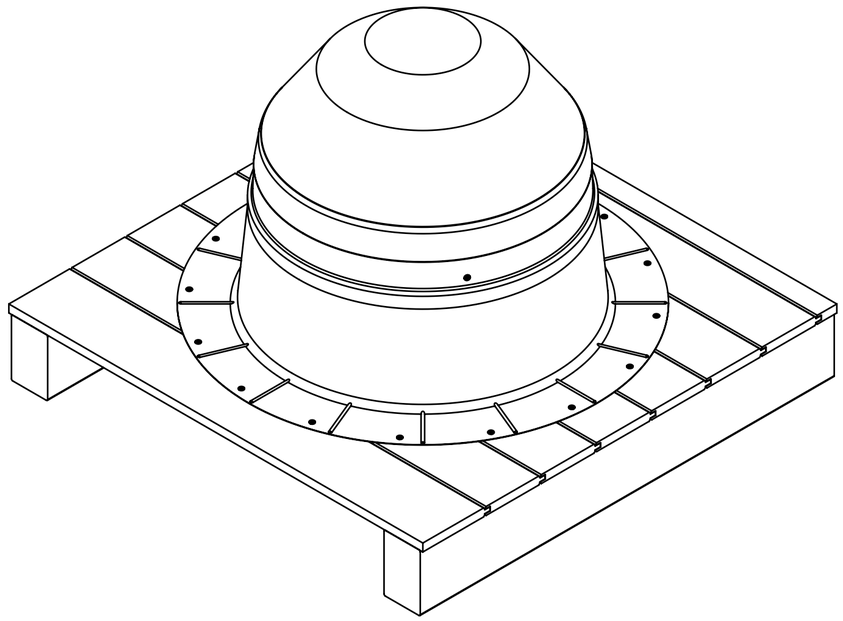

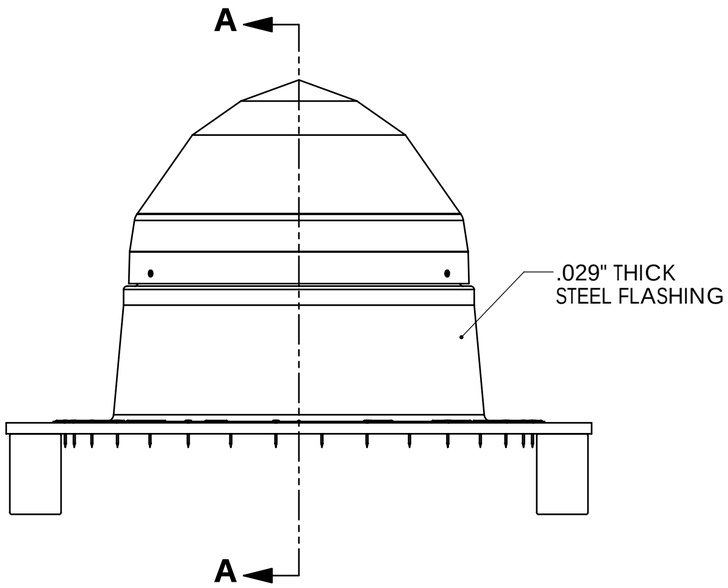

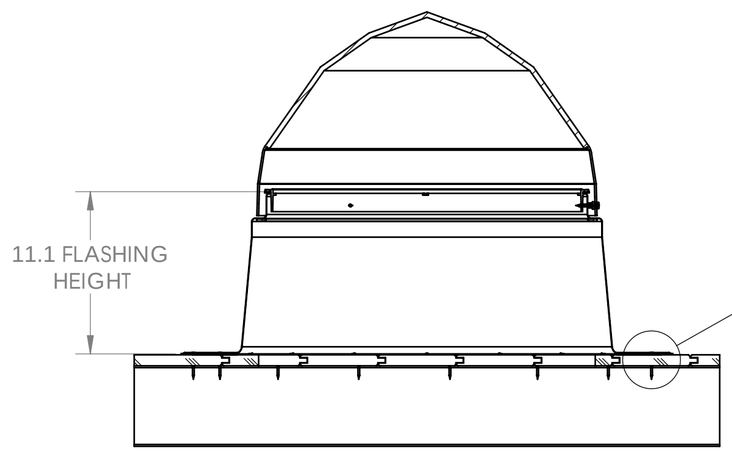

SECTION A-A

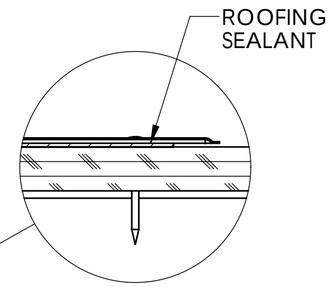

DETAIL B
SCALE 1 : 2

UNLESS OTHERWISE SPECIFIED:	PROPRIETARY AND CONFIDENTIAL		SOLATUBE® 2210 OAK RIDGE WAY VISTA, CALIFORNIA 92081-8341 PH (760) 597-4400	
TOLERANCES ANGULAR: ±0.5° INCH: .X ± .1, .XX ± .01, .XXX ± .005 MILLIMETER: [.X] ± 2.5, [.XX] ± .25, [.XXX] ± .12	THE INFORMATION CONTAINED IN THIS DRAWING IS THE SOLE PROPERTY OF SOLATUBE. ANY REPRODUCTION IN PART OR AS A WHOLE WITHOUT THE WRITTEN PERMISSION OF SOLATUBE IS PROHIBITED.		TITLE: 750 DS TYPE IV (T & G) ROOF ASSY.	
MATERIAL -- --	DRAWN BY STEVENS	DATE 4/30/08		
FINISH --	CHECKED BY --	DATE --	SIZE C	DWG. NO. 750-SF-TYPE IV
	APPROVED BY --	DATE --		REV 1
DO NOT SCALE DRAWING			SCALE: 1:8	SHEET 1 OF 1

REVISIONS					
REV.	ECO	DATE	REVISED	CHECKED	APPROVED
B	2673-1	9/21/2016	STEVENS		
C	2717-1	2/16/2017	STEVENS		
D	2779-1	3/16/2017	GIFFORD		

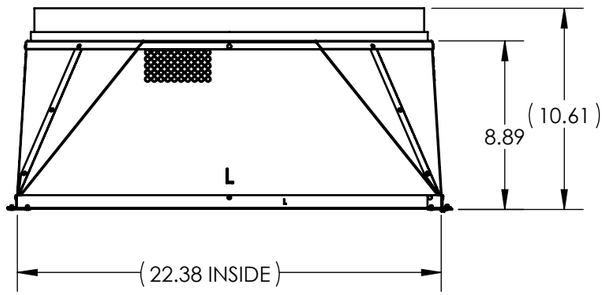

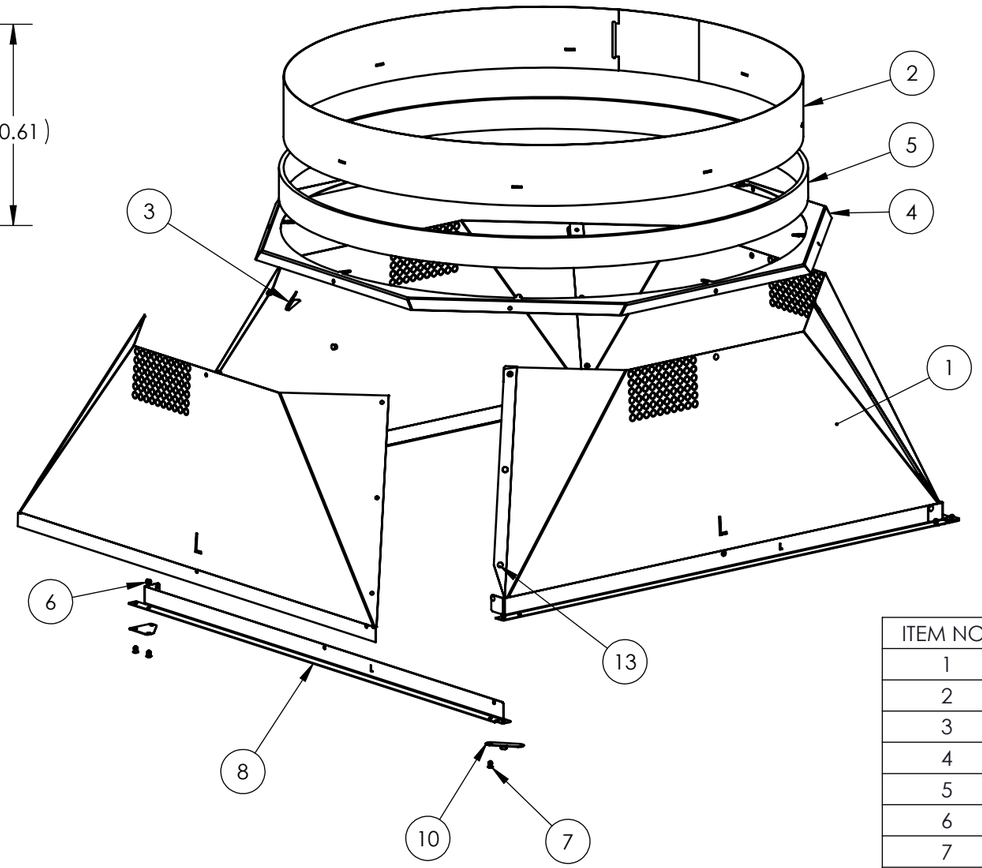

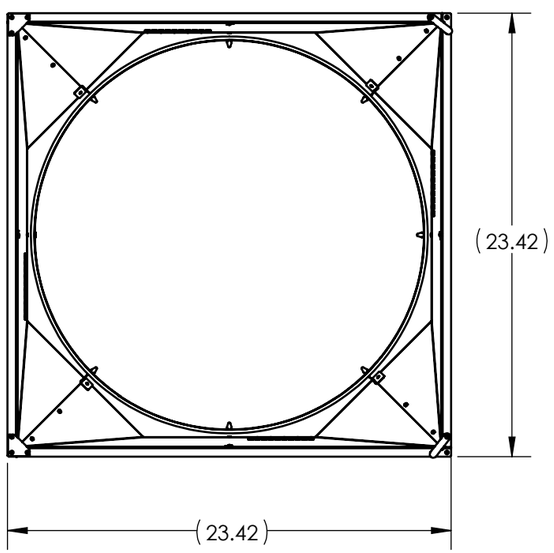

ITEM NO.	QTY.	PART NO.	DESCRIPTION
1	4	410975	TRANS PANEL DIMPLED 330/750 DS
2	1	402215	TRANSITION ADAPTER BAND 330/750 DS
3	4	701210	CLIP NAT EFF LENS METAL TRANSITION
4	1	402230	TRANSITION BOX CAP 330/750 DS
5	5.5 LF	600590	FOAM SEAL RECTANGLE
6	24	700635	RIVET 1/8 X 1/4 BLIND, MULTI
7	10	701180	RIVET 1/8 X 1/4 BLIND, MULTI WHITE
8	4	402540	TRANSITION TRIM COMM METRIC
9	2	402145	TRANSITION TRIM CORNER BRACE METRIC
10	2	402210	TRANSITION TRIM LEVER METRIC
11	17.16 LF	620150	TAPE FOIL, ROLL 50M (NOT SHOWN)
12	1	501820	LABEL LITD ROLL (NOT SHOWN)

UNLESS OTHERWISE SPECIFIED:

TOLERANCES
ANGULAR: ±0.5°

INCH	MILLIMETER
.X ± .06	[.X] ± 1.5
.XX ± .01	[.XX] ± .25
.XXX ± .005	[.XXX] ± .125

MATERIAL
--
--

FINISH
--
--

DO NOT SCALE DRAWING

PROPRIETARY AND CONFIDENTIAL

THE INFORMATION CONTAINED IN THIS DRAWING IS THE SOLE PROPERTY OF SOLATUBE. ANY REPRODUCTION IN PART OR AS A WHOLE WITHOUT THE WRITTEN PERMISSION OF SOLATUBE IS PROHIBITED.

DRAWN BY: STEVENS — DATE: 30 AUG 16
CHECKED BY: -- — DATE: --

INTERPRET DRAWINGS IAW:
ASME Y14.5 - 1994

SOLATUBE®
2210 OAK RIDGE WAY
VISTA, CALIFORNIA 92081-8341
PH (760) 597-4400

TITLE:
GEN 2 TRANSITION BOX 330/750 DS METRIC

SIZE	PROJECTION	DWG. NO.	REV
B	(3rd)	402030	D
	UNIT MM[INCH]	SCALE: 1:12	SHEET 1 OF 1