REVISIONS				
ZONE	REV	DESCRIPTION	DATE	APPROVED

SOLATUBE INTERNATIONAL
M74 DS CURB MOUNT TDD WITH AMPLIFIER - DUAL GLAZED

INSTALLATION ANCHORAGE SCHEDULE

OUTSIDE CURB DIMENSIONS	CURB			FASTENER (CURB CAP TO CURB)		
	MATERIAL	MIN. THICKNESS (1)	PROPERTIES (1)	DESCRIPTION	QUANTITY	SPACING
34-3/8" x 34-3/8"	2X8 SPRUCE-PINE-FUR	2" NOMINAL WOOD FRAMING	SPECIFY GRAVITY, G = 0.42	#10 X 2" PHILLIPS TRUSS HEAD SELD-DRILLING SHEET METAL SCREWS #10 X 2" WOOD SCREW	16	SPACED 2-1/2" AND 10" ON CENTER FROM EACH CORNER FOR A TOTAL OF FOUR FASTENERS PER SIDE.
	33 KSI STEEL (ASTM A653)	18 GAUGE (0.0451")	Fy = 33 KSI Fu = 45 KSI	#10-16 SAE GRADE 5 TEKS SCREW WITH MINIMUM 3 THREADS PAST THE CURB SUBSTRATE	16	SPACED 2-1/2" AND 10" ON CENTER FROM EACH CORNER FOR A TOTAL OF FOUR FASTENERS PER SIDE.
	3105-H14 ALUMINUM	0.0508"	Fty = 22 KSI Ftu = 25 KSI	#10-24 300 SERIES STAINLESS STEEL METAL SCREW WITH MINIMUM 3 THREADS PAST THE CURB SUBSTRATE	16	SPACED 2-1/2" AND 10" ON CENTER FROM EACH CORNER FOR A TOTAL OF FOUR FASTENERS PER SIDE.
	NORMAL WEIGHT CONCRETE	4"	f'c = 2,500 PSI	3/16" ITW TAPCON CONCRETE SCREW WITH MIN. EMBEDMENT OF 1-1/2"	16	SPACED 2-1/2" AND 10" ON CENTER FROM EACH CORNER FOR A TOTAL OF FOUR FASTENERS PER SIDE.

(1) INSTALLATION ON A CURB SUBSTRATE WITH A LOWER THICKNESS OR LOWER MECHANICAL PROPERTIES MAY RESULT IN A LOWER WIND LOAD RATING. ADDITIONAL ENGINEERING ANALYSIS REQUIRED BY A LICENSED DESIGN PROFESSIONAL FOR CURB SUBSTRATES WEAKER/LESSOR THAN THE MINIMUM REQUIREMENTS SHOWN.

PERFORMANCE RATING

OPENING PROTECTION APPLICABILITY	DESIGN PRESSURE (PSF)	IMPACT RATING
WIND BORNE DEBRIS REGION (OUTSIDE HVHZ)	+/-80	WIND ZONE 4 MISSILE LEVEL D
HVHZ	+/-80	LARGE MISSILE IMPACT
ALL OTHER AREAS WHERE OPENING PROTECTION IS NOT REQUIRED	+/-80	NA
THIS PRODUCT HAS BEEN TESTED TO HIGH VELOCITY HURRICANE ZONE (HVHZ) PROTOCOLS USING TAS 201, TAS 202 AND TAS 203.		
THIS PRODUCT HAS BEEN TESTED TO AAMA/WDMA/CSA 101/I.S.2/A440, ASTM E330, ASTM E283, ASTM E547, ASTM E1886 AND ASTM E1996		

SIGNED AND SEALED BY
Robert J. Amoruso, P.E.
Florida P.E. No. 49752

ROBERT JAMES AMORUSO LICENSE No 49752 STATE OF FLORIDA PROFESSIONAL ENGINEER

Digitally signed by Robert J. Amoruso
DN: cn=Robert J. Amoruso, o, ou=PTC Product Design Group, email=robert@ptc-corp.com, c=US
Date: 2015.10.13 19:57:46 -04'00'

PTC Product Design Group, LLC
PO Box 520775
Longwood, FL 32752-0775
FBPE C.A. NO. 25935
Phone: 321.690.1788
Fax: 321.690.1789
Email: info@ptc-corp.com

SOLATUBE Innovation in Daylighting.

Solatube International, Inc.
2210 Oak Ridge Way
Vista, CA 92081-8341

FILE NAME	
CONTRACT NO	415-0316
DRAWN	
CHECK	
APPR.	
ISSUED	

M74 DS CURB MOUNT
WITH AMPLIFIER - DUAL GLAZED

SIZE	FSCM NO	DWG NO	REV
	-	M74 DS-0-DPP-FC-A-L2-REG	ORIG.
SCALE NONE	WEIGHT	SHEET 1 OF 1	

M74 DS-0-DPP-FC-A-L2-REG - ANCHOR SCHEDULE

ROBERT J. AMORUSO, P.E.

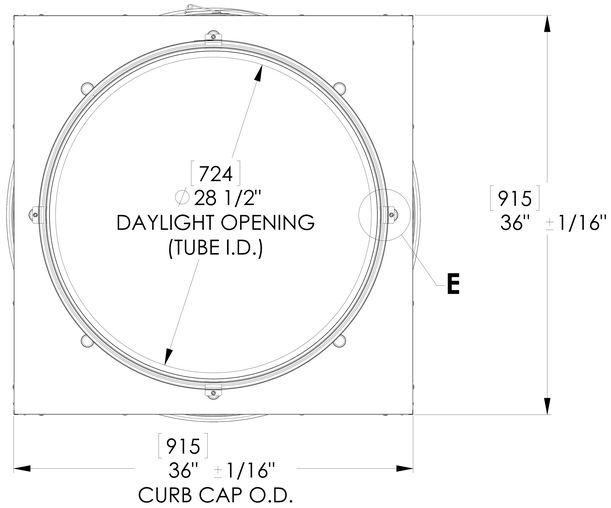

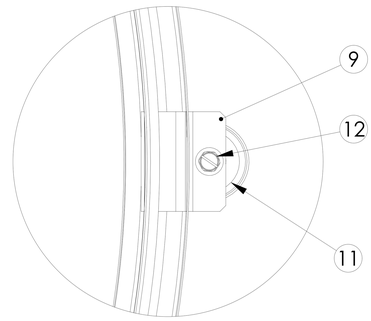

DETAIL E
SCALE 4 : 1
(4 PLACES)

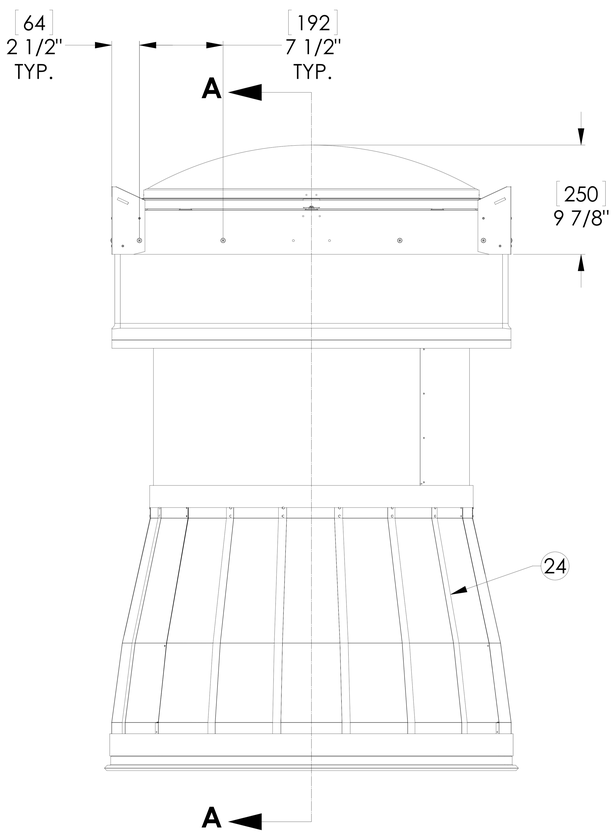

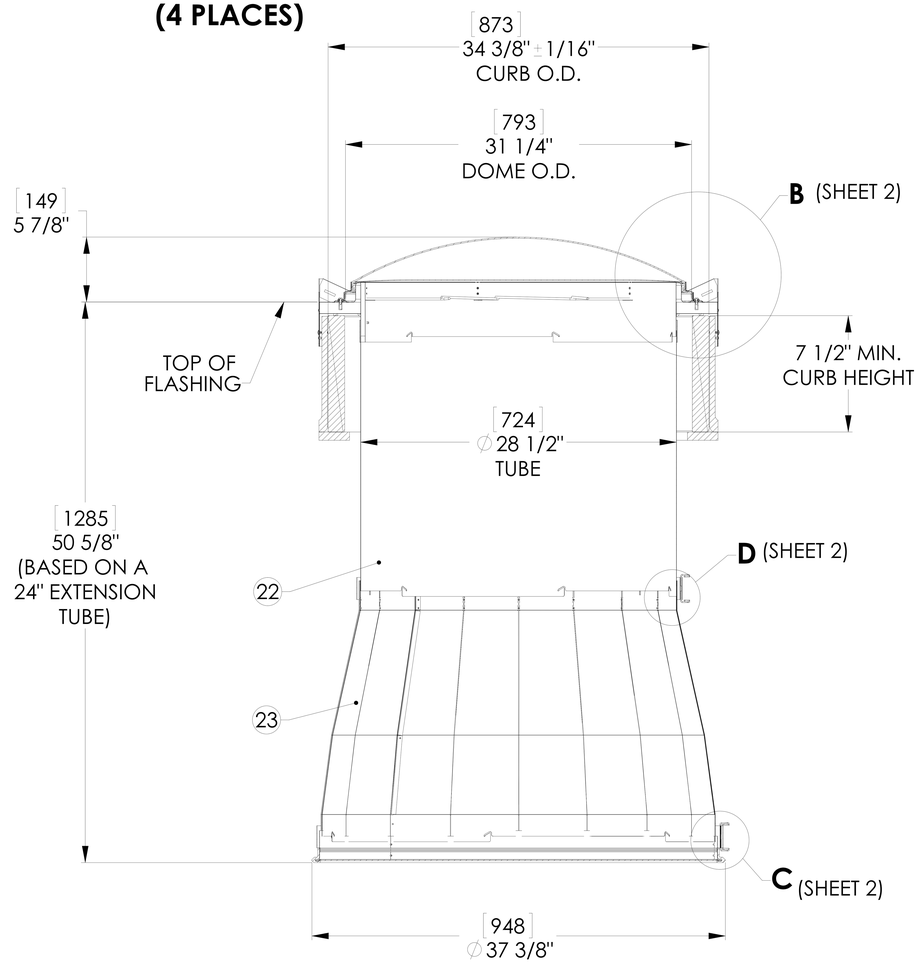

SECTION A-A

Digitally signed by Robert J. Amoruso
DN: cn=Robert J. Amoruso, o, ou=PTC Product Design Group, email=robert@ptc-corp.com, c=US
Date: 2015.10.13 19:58:02 -04'00'

NOTE:

1. CONSECUTIVE METAL BELTS & EXTENSION TUBES MAY BE ADDED ACCORDING TO PROJECT LIGHTING REQUIREMENTS
2. BOM ITEM NO. 4 IS OPTIONAL

ITEM NO.	PART NUMBER	DESCRIPTION	QTY.
1	508015	OUTER DOME M74 DS	1
2	510510	INNER THERMAL DISC M74 DS	1
3	600420	CLOSED CELL FOAM 'L' PROFILE	1
4	480015	SECURITY WIRE GRD ASSY (OPTIONAL)	1
5	210225	CURB CAP M74 DS	1
6	210210	CORNER BRACKET M74 DS	4
7	700635	RIVET 1/8	29
8	504205	RIVET NUT #10-24 CLOSED END	4
9	480045	DOME RETAINER BAND ASSY M74 DS	1
10	400685	DOME EDGE PROTECTION BAND M74 DS	1
11	700445	BONDED WASHER	4
12	504215	SCREW 10-24 X 5/8" HEX WASHER	4
13	410420	TUBE RING COLLAR M74 DS	1
14	500375	INSULATION SECTION, RIGID	4
15	601090	FOIL TAPE 2" WIDE	1.3 FT
16	700300	SEALANT	1
17	700480	SCREW 10 X 2" SMS	16
18	520025	TORSION SPRING M74 DS	2
19	504000	METAL BELT M74 DS	1
20	503990	METAL BELT M74 DS AMPLIFIER	1
21	504010	BELT HASP	2
22	320325/300475	24" / 48" EXTENSION TUBE M74 DS	1
23	400195	M74 DS AMPLIFIER SECTION	3
24	600010	FOIL TAPE 3/4" WIDE	37 FT
25	410055	DRESS RING SEAL M74 DS AMPLIFIER	1
26	420986	DIFFUSER M74 DS AMP. PRISMATIC PANEL	1
27	420735	DIFFUSER COLLAR ASSY M74 DS AMP	1
28	600325	CLOSED CELL FOAM 3/16 x 3/8	19 FT

UNLESS OTHERWISE SPECIFIED:
DIMENSION TOLERANCE
FRACTIONS ± 1/4"
INCH .X ± .1 .XX ± .06
MILLIMETER [.X] ± 2.5 [.XX] ± 1.5

MATERIAL
--
--

FINISH
--

DO NOT SCALE DRAWING

SOLATUBE INTERNATIONAL, INC.
COPYRIGHT 2013
WWW.SOLATUBE.COM

DRAWN BY: STEVENS — DATE: 11 SEP 13
CHECKED BY: -- — DATE: --
APPROVED BY: -- — DATE: --

SOLATUBE
2210 OAK RIDGE WAY
VISTA, CALIFORNIA 92081-8341
PH (760) 597-4400

TITLE:
M74 DS CURB MOUNT AMPLIFIER

SIZE: D
DWG. NO.: **M74 DS-O-DPP-FC-A-L2-REG**
REV: 1
SCALE: 2:3
SHEET 1 OF 2

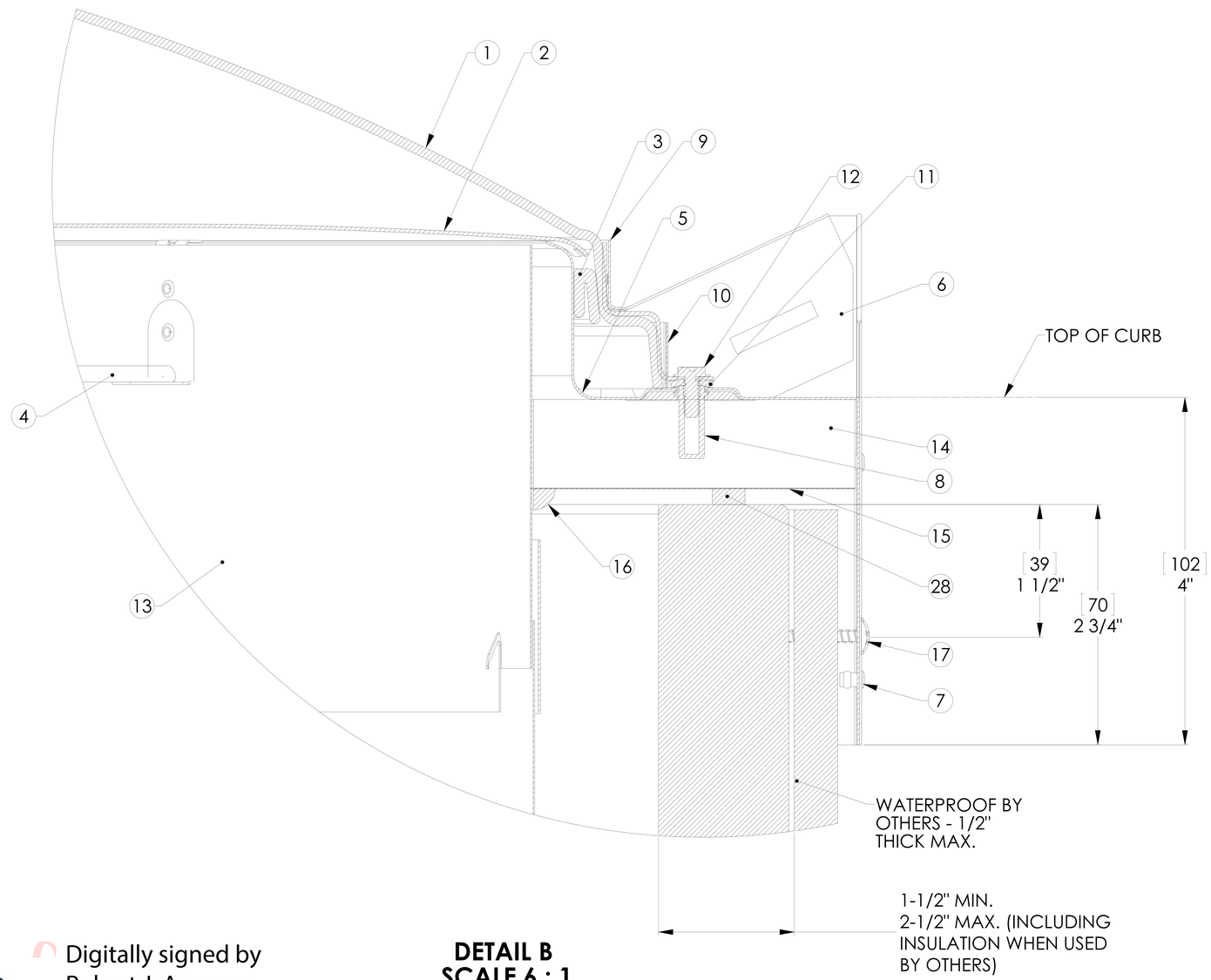

DETAIL B
SCALE 6 : 1

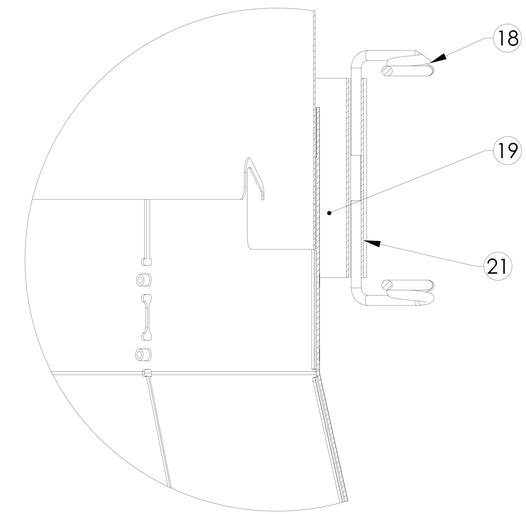

DETAIL D
SCALE 6 : 1

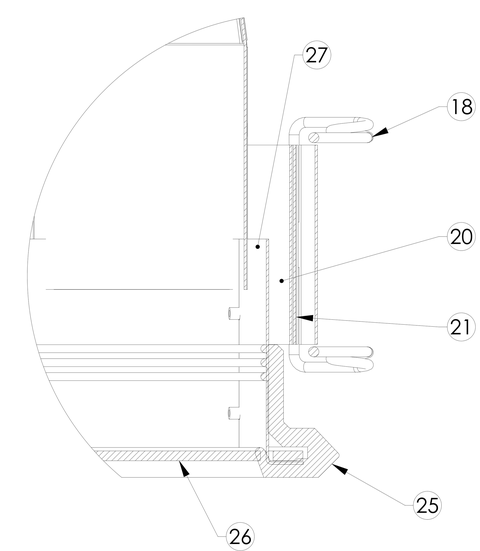

DETAIL C
SCALE 6 : 1

ROBERT JAMES AMORUSO
LICENSE
No 49752
STATE OF
FLORIDA
PROFESSIONAL ENGINEER

Digitally signed by Robert J. Amoruso
DN: cn=Robert J. Amoruso, o, ou=PTC Product Design Group, email=robert@ptc-corp.com, c=US
Date: 2015.10.13 19:58:15 -04'00'

TITLE:	M74 DS CURB MOUNT AMPLIFIER	
SIZE	DWG. NO.	REV
D	M74 DS-O-DPP-FC-A-L2-REG	1
	SCALE: 2:3	SHEET 2 OF 2