| REVISIONS | | | | |
|---|---|---|---|---|
| ZONE | REV | DESCRIPTION | DATE | APPROVED |
| | | | | |

# SOLATUBE INTERNATIONAL
# M74 DS CURB MOUNT OPEN CEILING TDD - SINGLE GLAZED

**INSTALLATION ANCHORAGE SCHEDULE**

| OUTSIDE CURB DIMENSIONS | CURB | | | FASTENER (CURB CAP TO CURB) | | |
|---|---|---|---|---|---|---|
| | MATERIAL | MIN. THICKNESS (1) | PROPERTIES (1) | DESCRIPTION | QUANTITY | SPACING |
| 34-3/8" x 34-3/8" | 2X8 SPRUCE-PINE-FUR | 2" NOMINAL WOOD FRAMING | SPECIFY GRAVITY, G = 0.42 | #10 X 2" PHILLIPS TRUSS HEAD SELD-DRILLING SHEET METAL SCREWS<br>#10 X 2" WOOD SCREW | 16 | SPACED 2-1/2" AND 10" ON CENTER FROM EACH CORNER FOR A TOTAL OF FOUR FASTENERS PER SIDE. |
| | 33 KSI STEEL (ASTM A653) | 18 GAUGE (0.0451") | Fy = 33 KSI<br>Fu = 45 KSI | #10-16 SAE GRADE 5 TEKS SCREW WITH MINIMUM 3 THREADS PAST THE CURB SUBSTRATE | 16 | SPACED 2-1/2" AND 10" ON CENTER FROM EACH CORNER FOR A TOTAL OF FOUR FASTENERS PER SIDE. |
| | 3105-H14 ALUMINUM | 0.0508" | Fty = 22 KSI<br>Ftu = 25 KSI | #10-24 300 SERIES STAINLESS STEEL METAL SCREW WITH MINIMUM 3 THREADS PAST THE CURB SUBSTRATE | 16 | SPACED 2-1/2" AND 10" ON CENTER FROM EACH CORNER FOR A TOTAL OF FOUR FASTENERS PER SIDE. |
| | NORMAL WEIGHT CONCRETE | 4" | f'c = 2,500 PSI | 3/16" ITW TAPCON CONCRETE SCREW WITH MIN. EMBEDMENT OF 1-1/2" | 16 | SPACED 2-1/2" AND 10" ON CENTER FROM EACH CORNER FOR A TOTAL OF FOUR FASTENERS PER SIDE. |

(1) INSTALLATION ON A CURB SUBSTRATE WITH A LOWER THICKNESS OR LOWER MECHANICAL PROPERTIES MAY RESULT IN A LOWER WIND LOAD RATING. ADDITIONAL ENGINEERING ANALYSIS REQUIRED BY A LICENSED DESIGN PROFESSIONAL FOR CURB SUBSTRATES WEAKER/LESSOR THAN THE MINIMUM REQUIREMENTS SHOWN.

**PERFORMANCE RATING**

| OPENING PROTECTION APPLICABILITY | DESIGN PRESSURE (PSF) | IMPACT RATING |
|---|---|---|
| WIND BORNE DEBRIS REGION (OUTSIDE HVHZ) | +/-80 | WIND ZONE 4<br>MISSILE LEVEL D |
| HVHZ | +/-80 | LARGE MISSILE IMPACT |
| ALL OTHER AREAS WHERE OPENING PROTECTION IS NOT REQUIRED | +/-80 | NA |
| THIS PRODUCT HAS BEEN TESTED TO HIGH VELOCITY HURRICANE ZONE (HVHZ) PROTOCOLS USING TAS 201, TAS 202 AND TAS 203. | | |
| THIS PRODUCT HAS BEEN TESTED TO AAMA/WDMA/CSA 101/I.S.2/A440, ASTM E330, ASTM E283, ASTM E547, ASTM E1886 AND ASTM E1996 | | |

SIGNED AND SEALED BY
Robert J. Amoruso, P.E.
Florida P.E. No. 49752

ROBERT JAMES AMORUSO LICENSE No 49752 STATE OF FLORIDA PROFESSIONAL ENGINEER

Digitally signed by Robert J. Amoruso
DN: cn=Robert J. Amoruso, o, ou=PTC Product Design Group, email=robert@ptc-corp.com, c=US
Date: 2015.10.13 19:55:39 -04'00'

PTC Product Design Group, LLC
PO Box 520775
Longwood, FL 32752-0775
FBPE C.A. NO. 25935
Phone: 321.690.1788
Fax: 321.690.1789
Email: info@ptc-corp.com

SOLATUBE Innovation in Daylighting.

**Solatube International, Inc.**
**2210 Oak Ridge Way**
**Vista, CA 92081-8341**

| | |
|---|---|
| FILE NAME | |
| CONTRACT NO | 415-0316 |
| DRAWN | |
| CHECK | |
| APPR. | |
| ISSUED | |

M74 DS CURB MOUNT
OPEN CEILING - SINGLE GLAZED

| SIZE | FSCM NO | DWG NO | REV |
|---|---|---|---|
| | - | M74 DS-0-DP-FC-B-L2-REG | ORIG. |
| SCALE NONE | WEIGHT | SHEET 1 OF 1 | |

M74 DS-0-DP-FC-B-L2-REG - ANCHOR SCHEDULE

ROBERT J. AMORUSO, P.E.

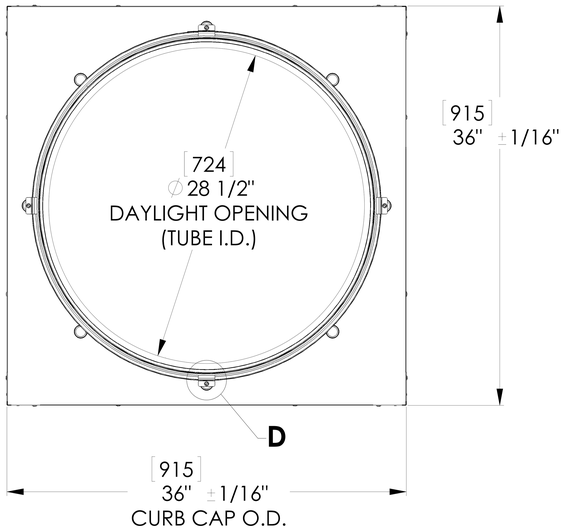


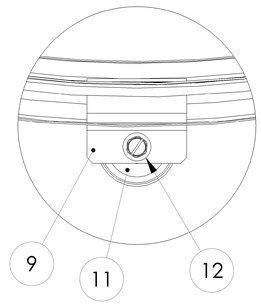


**DETAIL D**
**SCALE 4 : 1**
**(4 PLACES)**

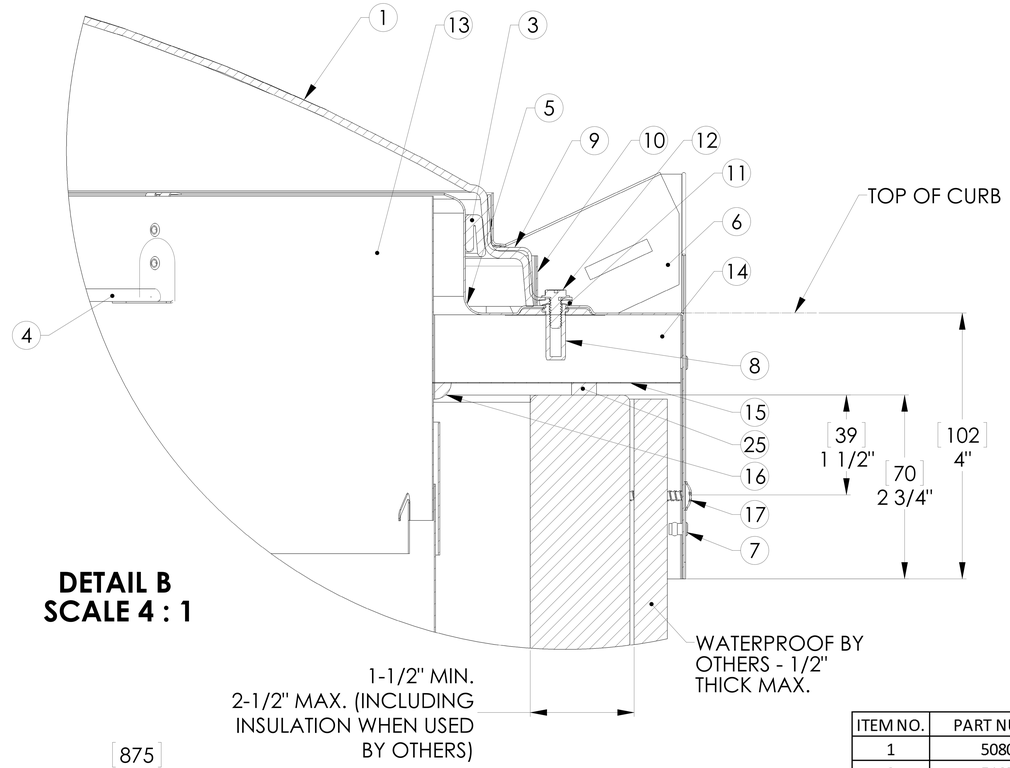


**DETAIL B**
**SCALE 4 : 1**

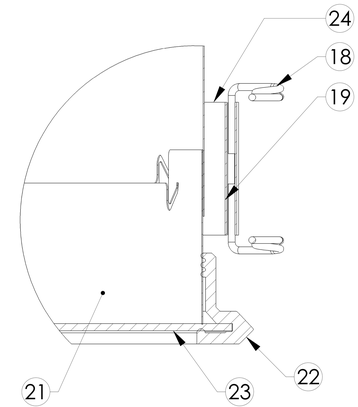


**DETAIL C**
**SCALE 4 : 1**

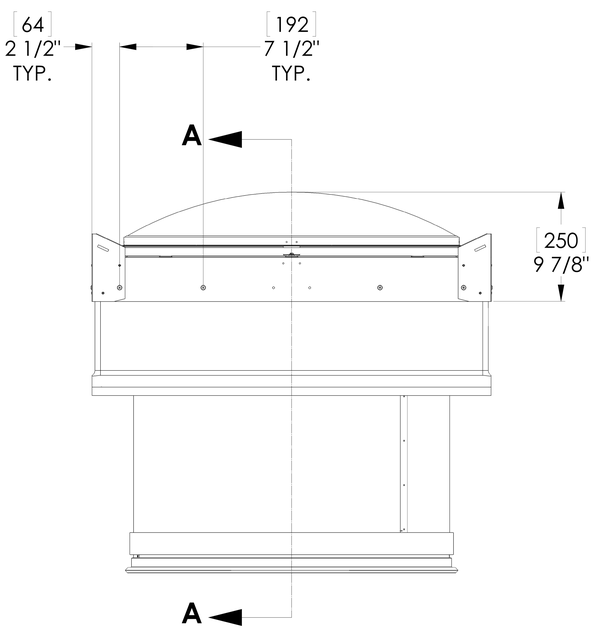


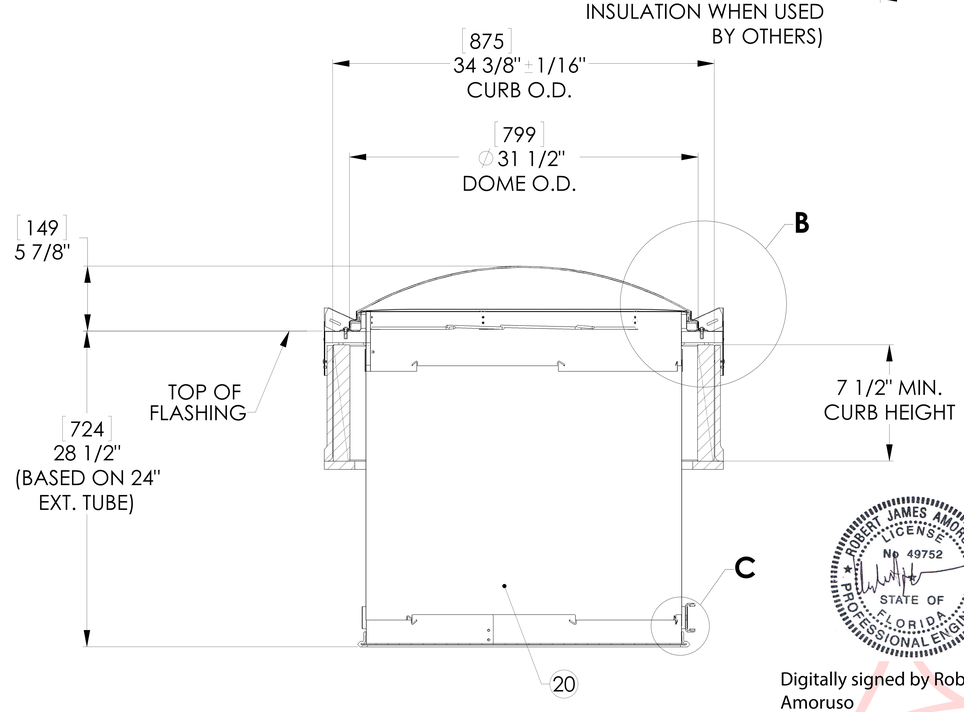


**SECTION A-A**

NOTE:

1. CONSECUTIVE METAL BELTS & EXTENSION TUBES MAY BE ADDED ACCORDING TO PROJECT LIGHTING REQUIREMENTS
2. BOM ITEM NO. 4 IS OPTIONAL

| ITEM NO. | PART NUMBER | DESCRIPTION | QTY. |
|---|---|---|---|
| 1 | 508015 | OUTER DOME M74 DS | 1 |
| ~~2~~ | ~~510510~~ | ~~INNER THERMAL DISC M74 DS~~ | ~~1~~ |
| 3 | 600420 | CLOSED CELL FOAM 'L' PROFILE | 1 |
| 4 | 480015 | SECURITY WIRE GRD ASSY (OPTIONAL) | 1 |
| 5 | 210225 | CURB CAP M74 DS | 1 |
| 6 | 210210 | CORNER BRACKET M74 DS | 4 |
| 7 | 700635 | RIVET 1/8 | 29 |
| 8 | 504205 | RIVET NUT #10-24 CLOSED END | 4 |
| 9 | 480045 | DOME RETAINER BAND ASSY M74 DS | 1 |
| 10 | 400685 | DOME EDGE PROTECTION BAND M74 DS | 1 |
| 11 | 700445 | BONDED WASHER | 4 |
| 12 | 504215 | SCREW 10-24 X 5/8" HEX WASHER | 4 |
| 13 | 410420 | TUBE COLLAR M74 DS | 1 |
| 14 | 500375 | INSULATION SECTION, RIGID | 4 |
| 15 | 601090 | FOIL TAPE 2" | 1.3 FT |
| 16 | 700300 | SEALANT | 1 |
| 17 | 700480 | SCREW 10 X 2" SMS | 16 |
| 18 | 520025 | TORSION SPRING M74 DS | 2 |
| 19 | 504000 | METAL BELT M74 DS | 2 |
| 20 | 320325/300475 | 24" / 48" EXTENSION TUBE M74 DS | 1 |
| 21 | 420725 | DIFFUSER COLLAR M74 DS | 1 |
| 22 | 410045 | DRESS RING SEAL M74 DS | 1 |
| 23 | 420985 | PRISMATIC PANEL DIFFUSER | 1 |
| 24 | 504010 | BELT HASP | 2 |
| 25 | 600325 | CLOSED CELL FOAM 3/16 x 3/8 | 19 FT |

ROBERT JAMES AMORUSO
LICENSE
No 49752
STATE OF
FLORIDA
PROFESSIONAL ENGINEER

Digitally signed by Robert J. Amoruso
DN: cn=Robert J. Amoruso, o, ou=PTC Product Design Group, email=robert@ptc-corp.com, c=US
Date: 2015.10.13 19:55:55 -04'00'

UNLESS OTHERWISE SPECIFIED:
DIMENSION TOLERANCE
FRACTIONS ± 1/4"
INCH .X ± .1 .XX ± .06
MILLIMETER [.X] ± 2.5 [.XX] ± 1.5

MATERIAL --
FINISH --
DO NOT SCALE DRAWING

SOLATUBE INTERNATIONAL, INC.
COPYRIGHT 2013
WWW.SOLATUBE.COM

DRAWN BY STEVENS — DATE 24 JUN 14
CHECKED BY -- — DATE --
APPROVED BY -- — DATE --

SOLATUBE
2210 OAK RIDGE WAY
VISTA, CALIFORNIA 92081-8341
PH (760) 597-4400

TITLE:
**M74 DS CURB MOUNT**
**OPEN CIELING**

SIZE D — DWG. NO. **M74 DS-O-DP-FC-B-L2-REG** — REV 1
SCALE: 2:3 — SHEET 1 OF 1