NOTES

1. (−W/L) = NEGATIVE WINDLOAD
   (+W/L) = POSITIVE WINDLOAD
2. WALL ANGLES MAY BE WELDED TO STEEL JAMB. USE MIN 60XX ELECTRODE
   SEE SHEET 2 FOR WELD DETAIL
3. RATED DESIGN LOAD ±65 PSF.
4. CURTAIN MATERIAL: ASTM A−653 (30KSI MIN YIELD) OR SS 304 (42KSI MIN YIELD).
   GUIDE MATERIAL: ASTM A−36
5. CURTAIN MATERIAL SHALL BE GALVANIZED ACCORDING TO ASTM A−653 TO G40 (MINIMUM).
6. THE DOOR MUST BE INSTALLED WITH THE TENSION WHEEL FACING THE INSIDE OF THE BUILDING.
7. SLIDE BOLTS MUST BE ENGAGED AND CHAIN MUST BE HOOKED WHEN HURRICANE WINDS ARE ANNOUNCED
8. WINDLOCK MATERIAL: LOW CARBON CAST STEEL, GRADE 70−46 (485−250) PER ASTM A27. MIN TENSILE 70−KSI MIN YIELD 36−KSI. MIN ELONG 22%
9. WINDLOCKS ATTACHED TO EACH SLAT (CONTINUOUS)
10. RIVET SPECIFICATIONS:
    1/4" DIAMETER RIVET, MINIMUM 1006 LOW−CARBON STEEL.
11. OPERATING (ROLL−UP) MECHANISM IS NOT INCLUDED IN THIS APPROVAL. IT MUST BE CERTIFIED BY AN INDEPENDANT TESTING AGENCY, IF REQUIRED.
12. COMPLIES WITH IBC/IRC 2018.

REVISIONS

ER	REV	DESCRIPTION	DATE	APPROVAL
502235	E	REV PER ER	7/18/13	MS
502222	F	REV PER ER	9/20/13	MS
32787	G	REV PER PCR	5/31/22	DG

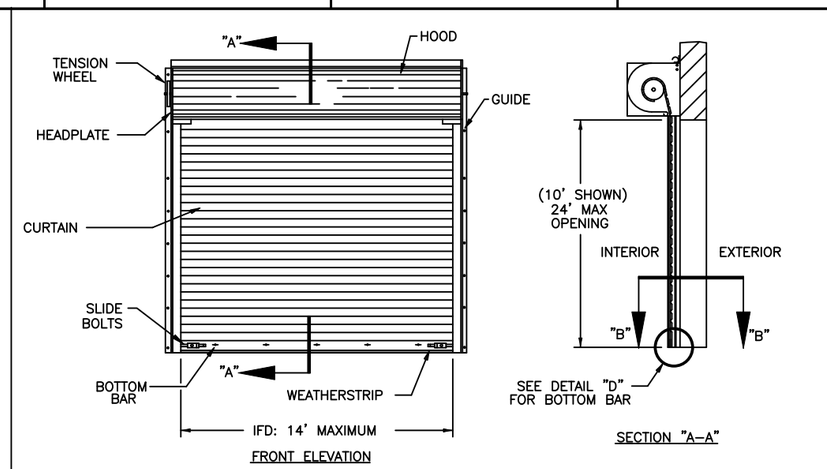

FRONT ELEVATION

SECTION "A−A"

HOT ROLLED ANGLES

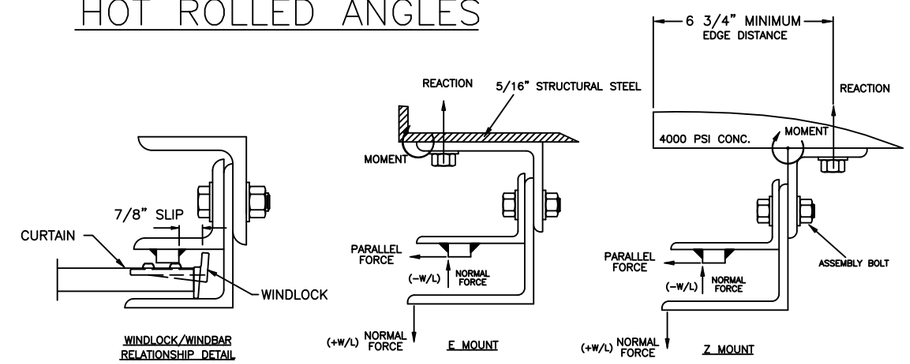

WINDLOCK/WINDBAR RELATIONSHIP DETAIL

E MOUNT

Z MOUNT

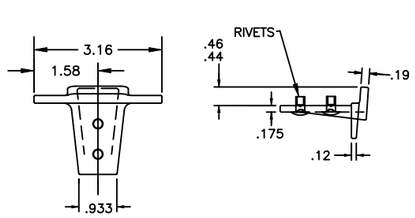

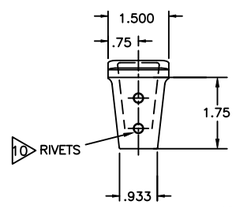

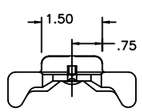

CONTINUOUS WINDLOCK DETAIL

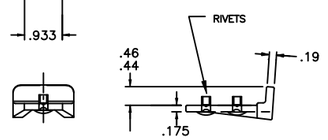

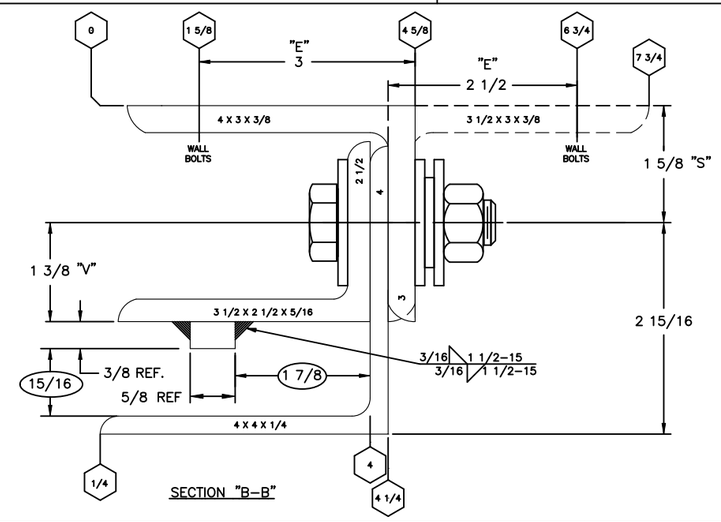

SECTION "B−B"

JAMB LOAD SUMMARY TABLE

PER FT DOOR HEIGHT	(E−MOUNT) LOADS	(Z−MOUNT) LOADS
REACTION (LBS)	3907	2131
NORMAL (LBS)	455	455
PARALLEL (LBS)	1208	1208
MOMENT (INLBS)	5499	5329

FASTENER SUMMARY TABLE

	ASSEMBLY BOLT	WALL BOLT STEEL JAMB	WALL BOLT * CONCRETE JAMB
F−265	5/8" GRADE 5, 18" O.C.	1/2" GRADE 5, 12" O.C.	5/8", 5 1/2" EFF. EMBED HILTI KBTZ2 OR EQUIVALENT 8" O.C.

* 4000 PSI MINIMUM AND 6−3/4" EDGE DISTANCE FOR ANCHORS MINIMUM 9" CONCRETE THICKNESS

2 NOTE: FOR DETAILS ON WELDING GUIDES TO STEEL JAMBS SEE SHEET 2.

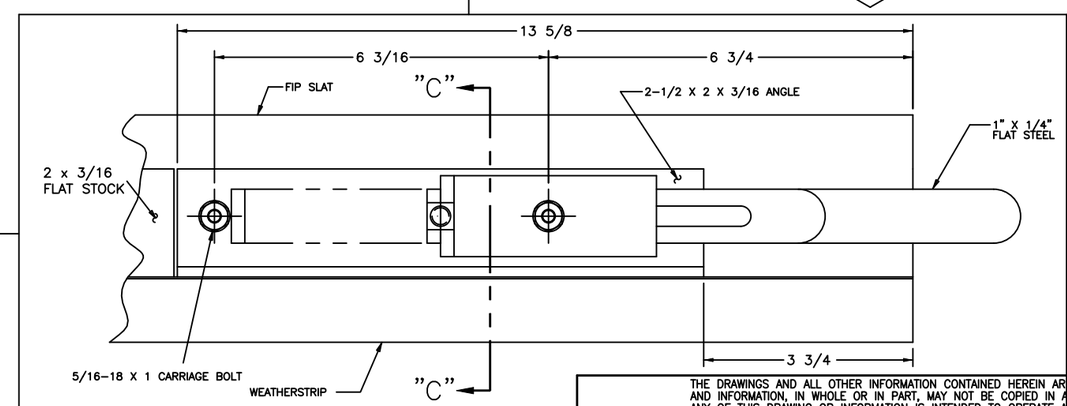

DETAIL "D"
BOTTOM BAR

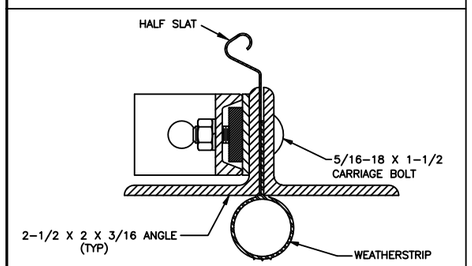

SECTION "C−C"

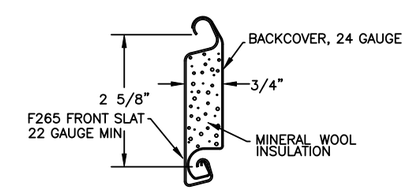

FIP SLAT

FRONT SLAT GAUGE OPTIONS: 22**, 20, 18

** TESTED IN ACCORDANCE WITH DADE COUNTY PROTOCOLS TAS 201−94, TAS 202−94, AND TAS 203−94

JOHN E. SCATES LICENSE No. 51737 STATE OF FLORIDA PROFESSIONAL ENGINEER

Digitally signed by John E Scates
Date: 2023.12.20 14:05:54 -06'00'

Printed copies of this document are not considered signed and sealed and the signature must be verified on any electronic copies

JOHN E. SCATES, PE
2560 KING ARTHUR BLVD, STE 124−54
LEWISVILLE, TX 75056
FL PE 51737 / TX PE 56308/F−2203

THE DRAWINGS AND ALL OTHER INFORMATION CONTAINED HEREIN ARE THE CONFIDENTIAL AND PROPRIETARY PROPERTY OF OVERHEAD DOOR CORPORATION AND ITS AFFILIATED COMPANIES. THIS DRAWING AND INFORMATION, IN WHOLE OR IN PART, MAY NOT BE COPIED IN ANY MANNER OR DISCLOSED TO ANYONE WITHOUT THE PRIOR WRITTEN CONSENT OF OVERHEAD DOOR CORPORATION. NO DISCLOSURE OF ANY OF THIS DRAWING OR INFORMATION IS INTENDED TO OPERATE AS A LICENSE OR AUTHORIZATION TO USE IT FOR ANY PURPOSE WITHOUT THE SPECIFIC WRITTEN CONSENT OF OVERHEAD DOOR CORPORATION.

REF DWG	USED ON

THIRD ANGLE PROJECTION

ASME Y14.100 AND Y14.5 APPLY, UNLESS OTHERWISE SPECIFIED DIMENSIONS ARE IN U.S. CUSTOMARY UNITS.

TOLERANCES UNLESS OTHERWISE SPECIFIED

HOLE DIAMETER	WHOLE NUMBERS: ± .25
UNDER .251 +.004/−.003	.X ± .1
.251 TO .500 +.006/−.003	.XX ± .03
OVER .500 +.008/−.003	.XXX ± .010
FRACTIONS	ANGLES: ± .5°
± 1/16	

FINISH 5

UNIT OF MEASURE N/A

The Genuine. The Original. OVERHEAD DOOR LEWISVILLE, TEXAS

MATERIAL: 4

	NAME	DATE
DRAWN BY:	D WARNER	2/26/09
CHECKED BY:	M SAWICKI	8/24/09
APPROVED BY:	S FOENG	9/23/09

DRAWING TITLE: SERIES 635, ROLLING FIRE DOOR 14' MIAMI−DADE COUNTY

DRAWING NUMBER D− 308232

SCALE: NONE SHEET 1 OF 2

NOTES

1. REFER TO DRAWING 308672–0001 FOR TAG DETAILS.
2. FASTENER FOR TAG IS P/N 080276–1004(STEEL DRIVE SCREW). TAG WILL BE MOUNTED IN THE MIDDLE OF THE BOTTOM BAR.

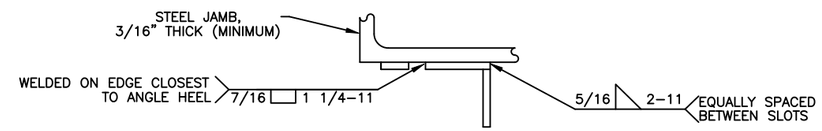

TOP VIEW

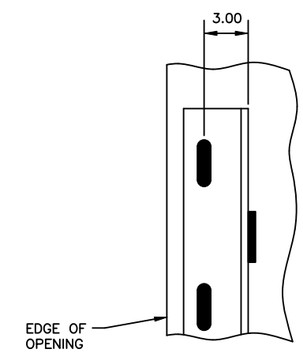

FRONT VIEW
OF WALL ANGLE

DETAILS FOR WELDING "E" GUIDES TO STEEL JAMBS

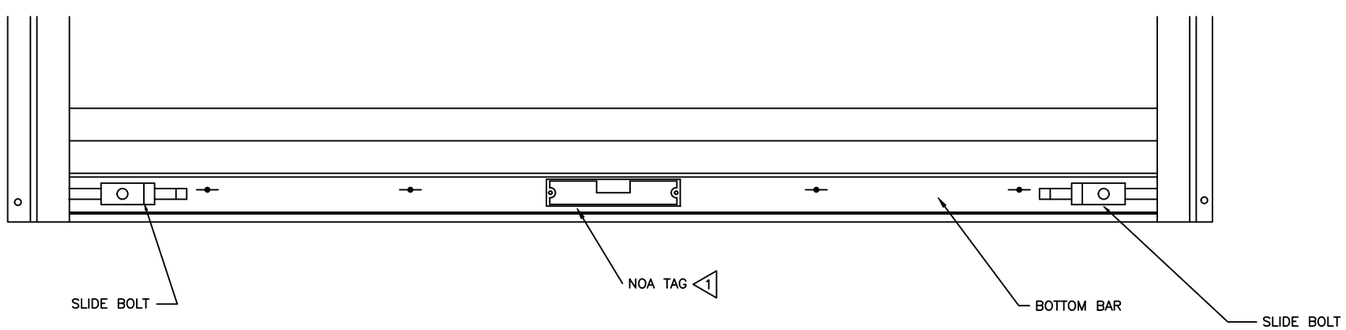

DETAIL "E" 2

SCALE: 4/1

JOHN E. SCATES
LICENSE
No. 51737
STATE OF
FLORIDA
PROFESSIONAL ENGINEER

JOHN E. SCATES, PE
2560 KING ARTHUR BLVD, STE 124–54
LEWISVILLE, TX 75056
FL PE 51737 / TX PE 56308/F–2203

THE DRAWINGS AND ALL OTHER INFORMATION CONTAINED HEREIN ARE THE CONFIDENTIAL AND PROPRIETARY PROPERTY OF OVERHEAD DOOR CORPORATION AND ITS AFFILIATED COMPANIES. THIS DRAWING AND INFORMATION, IN WHOLE OR IN PART, MAY NOT BE COPIED IN ANY MANNER OR DISCLOSED TO ANYONE WITHOUT THE PRIOR WRITTEN CONSENT OF OVERHEAD DOOR CORPORATION. NO DISCLOSURE OF ANY OF THIS DRAWING OR INFORMATION IS INTENDED TO OPERATE AS A LICENSE OR AUTHORIZATION TO USE IT FOR ANY PURPOSE WITHOUT THE SPECIFIC WRITTEN CONSENT OF OVERHEAD DOOR CORPORATION.

REF DWG	USED ON

THIRD ANGLE PROJECTION

ASME Y14.100 AND Y14.5 APPLY, UNLESS OTHERWISE SPECIFIED DIMENSIONS ARE IN U.S. CUSTOMARY UNITS.

TOLERANCES UNLESS OTHERWISE SPECIFIED

HOLE DIAMETER	
UNDER .251	+.004/–.003
.251 TO .500	+.006/–.003
OVER .500	+.008/–.003
FRACTIONS	
	± 1/16

WHOLE NUMBERS:	± .25
.X	± .1
.XX	± .03
.XXX	± .010
ANGLES:	± .5°

FINISH 5

UNIT OF MEASURE N/A

The Genuine. The Original. OVERHEAD DOOR LEWISVILLE, TEXAS

MATERIAL: 4

	NAME	DATE
DRAWN BY:	D WARNER	2/26/09
CHECKED BY:	M SAWICKI	8/24/09
APPROVED BY:	S FOENG	9/23/09

DRAWING TITLE: SERIES 635, ROLLING FIRE DOOR 14' MIAMI–DADE COUNTY

DRAWING NUMBER D– 308232

SCALE: NONE SHEET 2 OF 2