▷ NOTES

1. DESIGNED AND TESTED IN ACCORDANCE WITH FLORIDA BLDG CODE AND INTERNATIONAL BLDG CODE. PROFESSIONAL ENGINEER'S SEAL PROVIDED ONLY FOR VERIFICATION OF WIND LOAD CONSTRUCTION DETAILS.
2. SPACING IS THE CENTER TO CENTER DIMENSION.
3. INDICATES SLAT FREQUENCY IN WHICH WINDLOCKS OCCUR.
4. DELETED.
5. WALL ANGLES MAY BE WELDED TO STEEL JAMBS. APPLY PLUG WELDS IN THE WALL ANGLE SLOTS THE THICKNESS OF THE ANGLE OR FILLET WELD AT THE HEEL AND TOE OF THE WALL ANGLE 2" LONG AT EACH SPECIFIED BOLT LOCATION TO HOLD THE LOADS LISTED IN THE GUIDE TABLE.
6. "E" GUIDE DOORS USE WALL BOLTS AS SPECIFIED IN TABLE.
7. DELETED.
8. GUIDE ANGLE MATERIAL MAY BE ASTM–A36 OR SS 304.
9. SLAT MAY BE EITHER GALVANIZED, PAINTED OR STAINLESS STEEL.
10. THE ANCHOR USED TO ATTACH THE Z–GUIDE TO THE CONCRETE JAMB ARE FOR HILTI KBTZ2 (P/N 609420–XXXX) OR EQUIVALENT. THE MINIMUM JAMB CONSTRUCTION IS 6" THICK AND 3000PSI STRENGTH.
11. CHART OF WIND LOCK CLEARANCE

MAX OPENING WIDTH	CLEARANCE TENSILE
W < = 15'	5/8"
UP TO 20'	7/8"
UP TO 30'	1–3/8"
UP TO 40'	1–7/8"

PARALLEL FORCE: THE CATENARY FORCE OF THE CURTAIN APPLIED TO THE WINDBAR IN POUNDS PER FOOT OF HEIGHT.

NORMAL FORCE: THE FORCE NORMAL TO THE DOOR OPENING IN POUNDS PER FOOT OF HEIGHT.

MOMENT: THE RESOLUTION OF THE PARALLEL & NORMAL FORCES TO A POINT CORRESPONDING TO THE HEEL OF THE WALL ANGLE IN INCH*POUNDS PER FOOT OF DOOR HEIGHT.

REVISIONS				
ER	REV	DESCRIPTION	DATE	APPROVAL
500883	A	REV PER ER		
503788	B	UPDATE NEW SUBMITTAL	9/29/17	DG
33148	C	FBC 2023 REVISION	10/10/23	TD

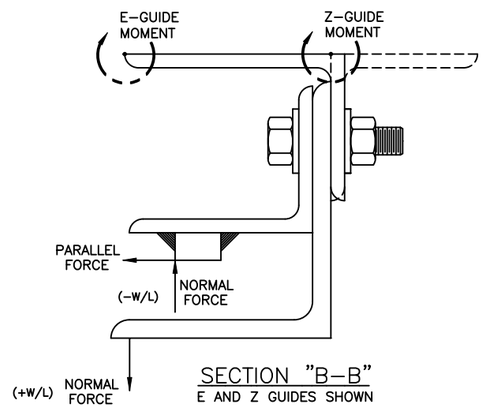

SECTION "B–B"
E AND Z GUIDES SHOWN

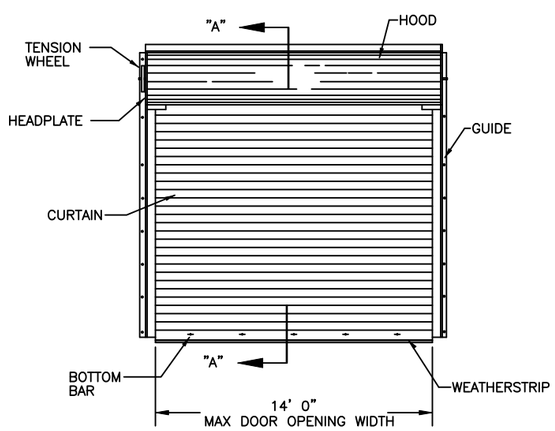

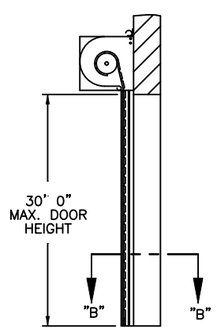

SECTION "A–A"

"E"–GUIDE

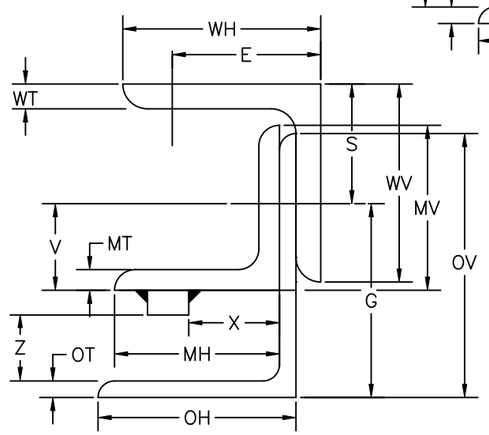

"Z"–GUIDE

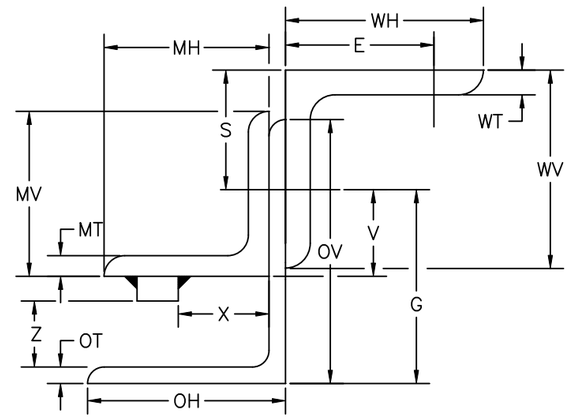

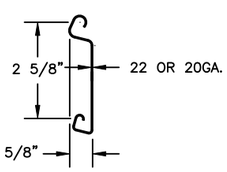

SLAT DETAIL

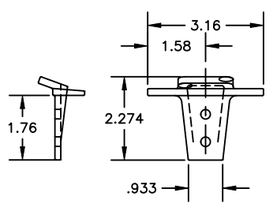

F–265 ALT. WINDLOCK DETAIL

APPROVED UNDER FL# 11305

		E–GUIDE WIND PRESSURE				Z–GUIDE WIND PRESSURE				NOTES
		26 PSF	31 PSF	36 PSF	41 PSF	26 PSF	31 PSF	36 PSF	41 PSF	
WALL HORIZONTAL	WH	4	4	4	4	3–1/2	3–1/2	3–1/2	3–1/2	
WALL VERTICAL	WV	3	3	3	3	3	3	3	3	
WALL THICKNESS	WT	1/4	1/4	1/4	1/4	1/4	1/4	1/4	1/4	
MIDDLE HORIZONTAL	MH	3–1/2	3–1/2	3–1/2	3–1/2	3–1/2	3–1/2	3–1/2	3–1/2	
MIDDLE VERTICAL	MV	2–1/2	2–1/2	2–1/2	2–1/2	2–1/2	2–1/2	2–1/2	2–1/2	
MIDDLE THICKNESS	MT	1/4	1/4	1/4	1/4	1/4	1/4	1/4	1/4	
OUTSIDE HORIZONTAL	OH	4	4	4	4	4	4	4	4	
OUTSIDE VERTICAL	OV	4	4	4	4	4	4	4	4	
OUTSIDE THICKNESS	OT	1/4	1/4	1/4	1/4	1/4	1/4	1/4	1/4	
E	E	3–1/4	3–1/4	3–1/4	3–1/4	1–3/4	1–3/4	1–3/4	1–3/4	
S	S	1–5/8	1–5/8	1–5/8	1–5/8	1–5/8	1–5/8	1–5/8	1–5/8	
V	V	1–3/8	1–3/8	1–3/8	1–3/8	1–3/8	1–3/8	1–3/8	1–3/8	
G	G	2–15/16	2–15/16	2–15/16	2–15/16	2–15/16	2–15/16	2–15/16	2–15/16	
X	X	1–7/8	1–7/8	1–7/8	1–7/8	1–7/8	1–7/8	1–7/8	1–7/8	
Z	Z	15/16	15/16	15/16	15/16	15/16	15/16	15/16	15/16	
WALL BOLT SIZE		1/2	1/2	1/2	1/2	3/8	3/8	3/8	1/2	
WALL BOLT GRADE		5	5	5	5	N/A	N/A	N/A	N/A	6
WALL BOLT EMBED		N/A	N/A	N/A	N/A	2–1/2	3–1/2	3–1/2	4	10
WALL BOLT SPACING		18	18	18	18	12	12	12	12	2
ASSEMBLY BOLT SIZE		1/2	1/2	1/2	1/2	1/2	1/2	1/2	1/2	
ASSEMBLY BOLT GRADE		5	5	5	5	5	5	5	5	
ASSEMBLY BOLT SPACING		18	18	18	18	18	18	18	18	2
WINDLOCK FREQUENCY		2	2	2	2	2	2	2	2	3
MOMENT (IN*LBS/FT)		2363	3021	3679	4336	2318	2967	3616	4265	
NORMAL (LBS/FT)		182	217	252	287	182	217	252	287	
PARALLEL (LBS/FT)		538	702	866	1030	538	702	866	1030	

JOHN E. SCATES LICENSE No. 51737 STATE OF FLORIDA PROFESSIONAL ENGINEER

Digitally signed by John E Scates
Date: 2023.10.11 16:18:30 -05'00'

JOHN E. SCATES, P.E.
2560 KING ARTHUR BLVD. #124–54
LEWISVILLE, TX 75056
FL PE 51737

Printed copies of this document are not considered signed and sealed and the signature must be verified on any electronic copies.

THE DRAWINGS AND ALL OTHER INFORMATION CONTAINED HEREIN ARE THE CONFIDENTIAL AND PROPRIETARY PROPERTY OF OVERHEAD DOOR CORPORATION AND ITS AFFILIATED COMPANIES. THIS DRAWING AND INFORMATION, IN WHOLE OR IN PART, MAY NOT BE COPIED IN ANY MANNER OR DISCLOSED TO ANYONE WITHOUT THE PRIOR WRITTEN CONSENT OF OVERHEAD DOOR CORPORATION. NO DISCLOSURE OF ANY OF THIS DRAWING OR INFORMATION IS INTENDED TO OPERATE AS A LICENSE OR AUTHORIZATION TO USE IT FOR ANY PURPOSE WITHOUT THE SPECIFIC WRITTEN CONSENT OF OVERHEAD DOOR CORPORATION.

REF DWG | USED ON

THIRD ANGLE PROJECTION

ASME Y14.100 AND Y14.5 APPLY, UNLESS OTHERWISE SPECIFIED DIMENSIONS ARE IN U.S. CUSTOMARY UNITS.

TOLERANCES UNLESS OTHERWISE SPECIFIED

HOLE DIAMETER: UNDER .251 +.004/–.003; .251 TO .500 +.006/–.003; OVER .500 +.008/–.003

FRACTIONS: ± 1/16

WHOLE NUMBERS: ± .25; .X ± .1; .XX ± .03; .XXX ± .010; ANGLES: ± .5°

FINISH: N/A

UNIT OF MEASURE: N/A

The Genuine. The Original. OVERHEAD DOOR LEWISVILLE, TEXAS

MATERIAL: N/A

	NAME	DATE
DRAWN BY:	G FINERAN	7/11/08
CHECKED BY:	D WARNER	10/30/08
APPROVED BY:	S FOENG	11/4/08

DRAWING TITLE: WINDLOAD, FIRE DOOR, F–265, +41/–41 PSF (DESIGN)

DRAWING NUMBER: D– 308218

SCALE: N/A SHEET 1 OF 1