STORM CATCHER WIND ABATEMENT SCREEN SYSTEM

FOR USE INSIDE AND OUTSIDE THE HIGH VELOCITY HURRICANE ZONE

STORM CATCHER THERMAL AND OPTICAL PROPERTIES SUMMARY

STORM CATCHER SCREEN COLOR	BLACK	WHITE	GRAY	BONE	BROWN
VLT - VISUAL LIGHT TRANSMITTANCE	0.21	0.28	0.17	0.14	0.09
UVT - ULTRAVIOLET LIGHT TRAMSMITTANCE	0.12	0.14	0.12	0.06	0.07
SST - SOLAR SPECTRUM TRANSMITTANCE	0.13	0.30	0.16	0.18	0.09
VLR - VISUAL LIGHT REFLECTANCE	0.07	0.53	0.26	0.44	0.22
SSR - SOLAR SPECTRUM REFLECTANCE	0.04	0.46	0.19	0.42	0.17
SHGC - SOLAR HEAT GAIN COEFFICIENT	0.17	0.25	0.17	0.17	0.14
SHGC REDUCTION	78%	67%	78%	78%	82%

SHGC PROPERTIES TESTED TO: NFRC 201 - 2010 USING INTERIM STANDARD TEST METHOD WITH CALORIMETRY HOT BOX METHODS AND UTILIZING CLEAR, INSULATED GLASS.

OPTICAL PROPERTIES TESTED TO:
ASTM E972 / ASTM E1084 / ASHRAE 74 / NFRC 202

TESTING BY: ARCHITECTURAL TESTING, INC., FRESNO, CA

WHAT IS SHGC?

A SIMPLE WAY TO EXPLAIN SHGC IS IN TERMS OF A RATIO; WHERE 1 IS THE MAXIMUM AMOUNT OF SOLAR HEAT GAIN THAT CAN COME THROUGH A WINDOW AND 0 IS THE LEAST AMOUNT. AN SHGC OF 0.25 THEN MEANS THAT 25% OF THE AVAILABLE SOLAR HEAT IS COMING THROUGH THE WINDOW.

WHAT IS VLT?

VLT MEASURES HOW MUCH LIGHT COMES THROUGH A PRODUCT. VLT IS EXPRESSED AS A NUMBER BETWEEN 0 AND 1. THE HIGHER THE VT NUMBER, THE HIGHER THE POTENTIAL FOR DAYLIGHTING.

STRUCTURAL HEMS

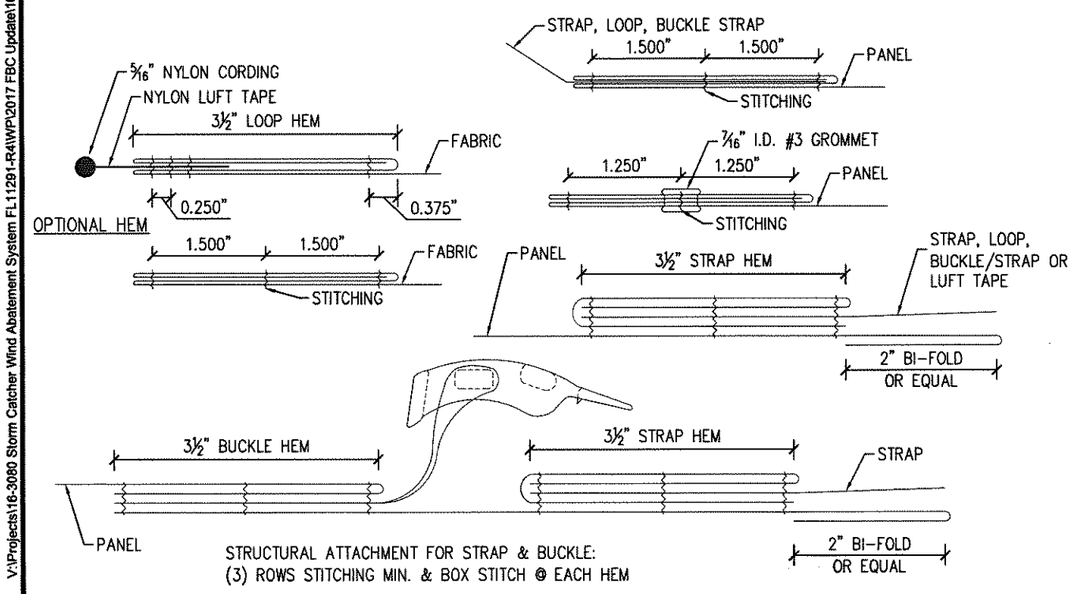

STRUCTURAL ATTACHMENT FOR STRAP & BUCKLE:
(3) ROWS STITCHING MIN. & BOX STITCH @ EACH HEM

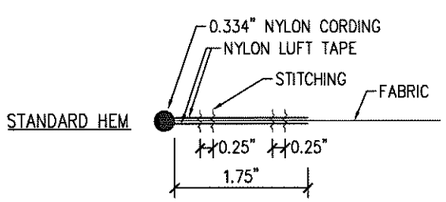

REFER TO TABLES FOR ALLOWABLE DESIGN PRESSURES

EVALUATION BASED ON:

FENESTRATION TESTING LABORATORY, INC.

LAB. No.	8441	LAB. No.	7590
PROJECT No.	15-5893	PROJECT No.	13-4387
LAB. No.	8440	FILE No.	13-890
PROJECT No.	15-5892	LAB. No.	9695
LAB. No.	7561	PROJECT No.	17-7199
PROJECT No.	13-4387	LAB. No.	9818
FILE No.	13-890	PROJECT No.	17-7449
LAB. No.	6026	LAB. No.	9834
PROJECT No.	09-1664	PROJECT No.	17-7543
FILE No.	09-665	LAB. No.	9835
LAB. No.	9836	PROJECT No.	17-7449
PROJECT No.	17-7543	LAB. No.	9765
LAB. No.	9742	PROJECT No.	17-7449
PROJECT No.	17-7199	LAB. No.	9647
LAB. No.	9833	PROJECT No.	17-7199
PROJECT No.	17-7543		

APPROVED EDGES

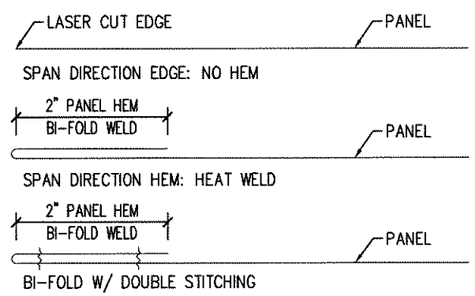

STITCHING - DETAILS

SPAN DIRECTION - SCALE: N.T.S.

A MINIMUM OF 3 ROWS OF STITCHING IS REQUIRED FOR SPAN DIRECTION EDGES.

DISTANCE BETWEEN ROWS OF STICHING MAY VARY. STITCH PATTERNS DISPLAY REQUIRED NUMBER OF STITCH ROWS SHOWN, MINIMUM.

STRAP SPECIFICATIONS:

PATTERN: X100-1000

WIDTH/DIAMETER: 1.875" +/- 0.063"
THICKNESS: 0.050" +/- 0.010"
AVERAGE BREAK STRENGTH: 6000 LBS
MATERIAL: POLYESTER

BUCKLE SPECIFICATIONS:

PATTERN: SPIKE TEETH GRIP

WIDTH/DIAMETER: 2.5" +/- 0.10"
THICKNESS: 0.050" +/- 0.010"
MATERIAL: ACETAL

HVHZ APPROVED

GENERAL NOTES

1. THE SYSTEM DESCRIBED HEREIN HAS BEEN DESIGNED AND TESTED IN ACCORDANCE WITH FLORIDA BUILDING CODE SIXTH EDITION (2017) AND 2015 INTERNATIONAL BUILDING CODE, FOR USE INSIDE AND OUTSIDE THE HIGH VELOCITY HURRICANE ZONE PER TAS 201, TAS 202, AND TAS 203 TESTING STANDARDS.
2. THESE INSTALLATION INSTRUCTIONS ARE PART OF A PRODUCT APPROVAL EVALUATION AND SHALL ONLY BE USED IN CONJUNCTION WITH THE EVALUATION REPORT SUBMITTED FOR THE SAME PRODUCT APPROVAL.
3. NO 33-1/3% INCREASE IN ALLOWABLE STRESS HAS BEEN USED IN THE DESIGN OF THIS SYSTEM. WIND LOAD DURATION FACTOR Cd=1.6 HAS BEEN USED FOR WOOD ANCHOR DESIGN.
4. POSITIVE AND NEGATIVE DESIGN PRESSURES CALCULATED FOR USE WITH THIS SYSTEM SHALL BE DETERMINED PER SEPARATE ENGINEERING IN ACCORDANCE WITH THE GOVERNING CODE. PRESSURE REQUIREMENTS SHALL BE LESS THAN OR EQUAL TO THE POSITIVE OR NEGATIVE DESIGN PRESSURE CAPACITY VALUES LISTED HEREIN FOR ANY ASSEMBLY AS SHOWN.
5. DESIGN PRESSURES NOTED HEREIN ARE BASED ON MAXIMUM TESTED PRESSURES DIVIDED BY A 1.5 SAFETY FACTOR.
6. THE SYSTEM DETAILED HEREIN IS GENERIC AND DOES NOT PROVIDE INFORMATION FOR A SPECIFIC SITE. FOR SITE CONDITIONS DIFFERENT FROM THE CONDITIONS DETAILED HEREIN, A LICENSED ENGINEER OR REGISTERED ARCHITECT SHALL PREPARE SITE SPECIFIC DOCUMENTS FOR USE IN CONJUNCTION WITH THIS DOCUMENT.
7. THIS PRODUCT IS CLASSIFIED AS NON-POROUS, HAVING A POROSITY OF LESS THAN 10%. FOR THE CONDITIONS SHOWN IN THIS PRODUCT EVALUATION DOCUMENT, SCREEN PANELS MUST COMPLETELY COVER AN OPENING IN ALL DIRECTIONS TO MEET BUILDING ENVELOPE REQUIREMENTS.
8. PERMIT HOLDER SHALL VERIFY THE ADEQUACY OF THE EXISTING STRUCTURE TO WITHSTAND SUPERIMPOSED LOADS. WOOD BUCKS (BY OTHERS) SHALL BE ANCHORED PROPERLY TO TRANSFER LOADS TO THE EXISTING STRUCTURE.
9. MAXIMUM PANEL SPAN:
   - 9.1. 30'-0" FOR DESIGN PRESSURES UP TO ±60 PSF
   - 9.2. 16'-0" FOR DESIGN PRESSURES UP TO ±130 PSF
   - 9.3. FOR GROMMET SCREENS: 16'-0" FOR DESIGN PRESSURES UP TO ±60 PSF
10. MAXIMUM ALLOWABLE DESIGN PRESSURE: SEE 9.1, 9.2 & 9.3 ABOVE.
11. PANELS SHALL BE PERMANENTLY LABELED WITH A MINIMUM OF ONE LABEL PER PANEL CONTAINING THE FOLLOWING MINIMUM INFORMATION:
    STORM SMART INDUSTRIES, INC.
    6182 IDLEWILD STREET, FORT MYERS, FL 33966
    FL PRODUCT APPROVAL NO. FL11291.2
    OPENING NO. #
12. HURRICANE FABRIC PANELS MAY BE MOUNTED VERTICALLY OR HORIZONTALLY AS APPLICABLE WITH SEPARATION FROM GLAZING PER TABLE 3 ON SHEET 4.
13. EXCEPT AS EXPRESSLY PROVIDED HEREIN, NO ADDITIONAL CERTIFICATIONS OR AFFIRMATIONS ARE INTENDED.
14. ALL ALUMINUM EXTRUSIONS SHALL BE 6063-T6, U.N.O.

HURRICANE BARRIER

POLYPROPYLENE MONOFILAMENT WOVEN INTO
BASKET WEAVE DESIGN:
BEIGE/BLACK (BROWN), BEIGE/WHITE (BONE),
BLACK, BLACK/WHITE (GRAY), WHITE, BLACK

MECHANICAL PROPERTIES	TEST METHOD	UNIT	TYPICAL ROLL VALUE	
			MD	CD
GRAB TENSILE STRENGTH	ASTM D4632	LBS	500	550
TRAPEZOID TEAR STRENGTH	ASTM D4533	LBS	200	250
MULLEN BURST	ASTM D3786	PSI	750	
PUNCTURE STRENGTH	ASTM D4833	LBS	200	
AIR FLOW	ASTM D737	CFM	175	
PERCENT OPEN AREA[1]	COE-02215	%	5	
UV RESISTANCE (QUV)	ASTM G154	% STRENGTH RETAINED	70	

[1]Percent Open Area is a MARV.

PHYSICAL PROPERTIES	TEST METHOD	UNIT	TYPICAL VALUE
WEIGHT	ASTM D5261	OZ/YD^2	9.7
THICKNESS	ASTM D5199	MIL	21
CONSTRUCTION		EPI/PPI	60 x 63
FIBER CONTENT			100% PP

SEWING:

T138 POLYESTER THREAD (FOR ALL SPANS @ +/- 130PSF)
2400/2640 PTFE THREAD (FOR SPANS UP TO 16' & +/- 130PSF)
GENERIC OR EQUIVALENT; SEE STITCHING DETAILS ON THIS SHEET.

FRANK L. BENNARDO, P.E.
PE# 0046549
LICENSE
10/20/2017
No PE0046549
IF CHECKED, THIS DOCUMENT IS NOT VALID UNLESS SIGNED
FRANK L. BENNARDO, P.E.
46549
STATE OF FLORIDA
PROFESSIONAL ENGINEER

ENGINEERING EXPRESS®
CORPORATE OFFICE:
160 SW 12th AVE, SUITE 106
DEERFIELD BEACH, FL 33442
P: (954) 354-0660 F: (954) 354-0443
E: HELLO@ENGINEERINGEXPRESS.COM
ENGINEERINGEXPRESS.COM
CERT OF AUTH #9885

STORM SMART INDUSTRIES, INC.
6182 IDLEWILD STREET
FORT MYERS , FL
(239) 938-1000

STORM CATCHER WIND ABATEMENT SYSTEM FL11291.2 HVHZ
-
-, FL

REMARKS	DRWN	CHKD	DATE
INIT ISSUE	RWN	FLB	10/18/17

THIS DOCUMENT IS THE PROPERTY OF ENGINEERING EXPRESS, AND SHALL NOT BE REPRODUCED IN WHOLE OR PART WITHOUT WRITTEN CONSENT OF ENGINEERING EXPRESS. ALTERATIONS, ADDITIONS, OR OTHER MARKINGS TO THIS DOCUMENT ARE NOT PERMITTED AND INVALIDATE OUR CERTIFICATION.

COPYRIGHT ENGINEERING EXPRESS ®

16-3080

SCALE: NTS UNLESS NOTED

V:\Projects\16-3080 Storm Catcher Wind Abatement System FL11291-R4\WP\2017 FBC Update\16-3080e-Dwg-11291.2.dwg
zachr
10/20/2017 - 3:08pm

TABLE 1

LOAD ON EXISTING STRUCTURE FROM SCREEN SYSTEM
Tx = PARALLEL LOADS (PLF)

SPAN	DESIGN PRESSURE																				
	30 PSF	35 PSF	40 PSF	45 PSF	50 PSF	55 PSF	60 PSF	65 PSF	70 PSF	75 PSF	80 PSF	85 PSF	90 PSF	95 PSF	100 PSF	105 PSF	110 PSF	115 PSF	120 PSF	125 PSF	130 PSF
3'-0"	257.2	285.0	311.6	337.0	361.5	385.3	408.3	430.6	452.5	473.8	494.6	515.0	535.0	554.6	573.9	592.9	611.6	630.0	648.1	666.0	683.6
3'-6"	285.0	315.9	345.3	373.5	400.7	427.0	452.5	477.3	501.4	525.0	548.1	570.7	592.9	614.6	636.0	657.1	677.8	698.1	718.2	738.0	757.6
4'-0"	311.6	345.3	377.4	408.3	438.0	466.7	494.6	521.7	548.1	573.9	599.1	623.9	648.1	671.9	695.2	718.2	740.9	763.1	785.1	806.8	828.1
4'-6"	337.0	373.5	408.3	441.6	473.8	504.8	535.0	564.3	592.9	620.8	648.1	674.8	701.0	726.8	752.0	776.9	801.4	825.5	849.2	872.7	895.8
5'-0"	361.5	400.7	438.0	473.8	508.2	541.6	573.9	605.4	636.0	666.0	695.2	723.9	752.0	779.6	806.8	833.4	859.7	885.5	911.0	936.2	961.0
5'-6"	385.3	427.0	466.7	504.8	541.6	577.1	611.6	645.1	677.8	709.7	740.9	771.4	801.4	830.8	859.7	888.1	916.1	943.6	970.8	997.6	1024.0
6'-0"	408.3	452.5	494.6	535.0	573.9	611.6	648.1	683.6	718.2	752.0	785.1	817.5	849.2	880.4	911.0	941.1	970.8	1000.0	1028.8	1057.2	1085.2
6'-6"	430.6	477.3	521.7	564.3	605.4	645.1	683.6	721.1	757.6	793.3	828.1	862.3	895.8	928.7	961.0	992.7	1024.0	1054.8	1085.2	1115.1	1144.6
7'-0"	452.5	501.4	548.1	592.9	636.0	677.8	718.2	757.6	796.0	833.4	870.1	906.0	941.1	975.7	1009.6	1043.0	1075.9	1108.2	1140.1	1171.6	1202.6
7'-6"	473.8	525.0	573.9	620.8	666.0	709.7	752.0	793.3	833.4	872.7	911.0	948.6	985.4	1021.6	1057.2	1092.1	1126.5	1160.4	1193.8	1226.7	1259.2
8'-0"	494.6	548.1	599.1	648.1	695.2	740.9	785.1	828.1	870.1	911.0	951.1	990.3	1028.8	1066.5	1103.6	1140.1	1176.0	1211.4	1246.3	1280.7	1314.6
8'-6"	515.0	570.7	623.9	674.8	723.9	771.4	817.5	862.3	906.0	948.6	990.3	1031.2	1071.2	1110.5	1149.2	1187.1	1224.5	1261.4	1297.7	1333.5	1368.8
9'-0"	535.0	592.9	648.1	701.0	752.0	801.4	849.2	895.8	941.1	985.4	1028.8	1071.2	1112.8	1153.7	1193.8	1233.3	1272.1	1310.4	1348.1	1385.3	1422.0
9'-6"	554.6	614.6	671.9	726.8	779.6	830.8	880.4	928.7	975.7	1021.6	1066.5	1110.5	1153.7	1196.0	1237.6	1278.5	1318.8	1358.5	1397.6	1436.1	1474.2
10'-0"	573.9	636.0	695.2	752.0	806.8	859.7	911.0	961.0	1009.6	1057.2	1103.6	1149.2	1193.8	1237.6	1280.7	1323.0	1364.7	1405.7	1446.2	1486.1	1525.4
10'-6"	592.9	657.1	718.2	776.9	833.4	888.1	941.1	992.7	1043.0	1092.1	1140.1	1187.1	1233.3	1278.5	1323.0	1366.7	1409.8	1452.2	1494.0	1535.2	1575.9
11'-0"	611.6	677.8	740.9	801.4	859.7	916.1	970.8	1024.0	1075.9	1126.5	1176.0	1224.5	1272.1	1318.8	1364.7	1409.8	1454.2	1497.9	1541.0	1583.6	1625.5
11'-6"	630.0	698.1	763.1	825.5	885.5	943.6	1000.0	1054.8	1108.2	1160.4	1211.4	1261.4	1310.4	1358.5	1405.7	1452.2	1497.9	1543.0	1587.4	1631.2	1674.4
12'-0"	648.1	718.2	785.1	849.2	911.0	970.8	1028.8	1085.2	1140.1	1193.8	1246.3	1297.7	1348.1	1397.6	1446.2	1494.0	1541.0	1587.4	1633.1	1678.1	1722.6
12'-6"	666.0	738.0	806.8	872.7	936.2	997.6	1057.2	1115.1	1171.6	1226.7	1280.7	1333.5	1385.3	1436.1	1486.1	1535.2	1583.6	1631.2	1678.1	1724.4	1770.1
13'-0"	683.6	757.6	828.1	895.8	961.0	1024.0	1085.2	1144.6	1202.6	1259.2	1314.6	1368.8	1422.0	1474.2	1525.4	1575.9	1625.5	1674.4	1722.6	1770.1	1817.0
13'-6"	701.0	776.9	849.2	918.6	985.4	1050.1	1112.8	1173.8	1233.3	1291.3	1348.1	1403.7	1458.2	1511.7	1564.3	1616.0	1666.9	1717.1	1766.5	1815.2	1863.3
14'-0"	718.2	796.0	870.1	941.1	1009.6	1075.9	1140.1	1202.6	1263.5	1323.0	1381.2	1438.1	1494.0	1548.8	1602.7	1655.7	1707.8	1759.2	1809.8	1859.8	1909.0
14'-6"	735.2	814.8	890.7	963.4	1033.5	1101.3	1167.1	1231.1	1293.4	1354.3	1413.9	1472.2	1529.3	1585.5	1640.6	1694.9	1748.3	1800.8	1852.7	1903.8	1954.2
15'-0"	752.0	833.4	911.0	985.4	1057.2	1126.5	1193.8	1259.2	1323.0	1385.3	1446.2	1505.8	1564.3	1621.7	1678.1	1733.6	1788.2	1842.0	1895.0	1947.3	1998.9
15'-6"	768.7	851.9	931.2	1007.2	1080.5	1151.4	1220.2	1287.0	1352.2	1415.9	1478.1	1539.1	1598.9	1657.6	1715.2	1771.9	1827.7	1882.7	1936.9	1990.3	2043.1
16'-0"	785.1	870.1	951.1	1028.8	1103.6	1176.0	1246.3	1314.6	1381.2	1446.2	1509.8	1572.0	1633.1	1693.0	1751.9	1809.8	1866.8	1923.0	1978.3	2032.9	2086.8
16'-6"	801.1	887.8	970.4	1049.7	1126.1	1199.9	1271.6														
17'-0"	816.6	905.0	989.3	1070.1	1147.9	1223.2	1296.3														
17'-6"	831.9	921.9	1007.8	1090.1	1169.4	1246.1	1320.6														
18'-0"	846.9	938.6	1026.0	1109.8	1190.5	1268.6	1344.4														
18'-6"	861.7	954.9	1043.8	1129.1	1211.3	1290.7	1367.8														
19'-0"	876.2	971.0	1061.4	1148.1	1231.6	1312.4	1390.8														
19'-6"	890.4	986.7	1078.6	1166.7	1251.6	1333.7	1413.4														
20'-0"	904.3	1002.2	1095.5	1185.0	1271.2	1354.6	1435.5														
20'-6"	918.0	1017.3	1112.0	1202.9	1290.4	1375.1	1457.2														
21'-0"	931.3	1032.1	1128.2	1220.4	1309.2	1395.1	1478.4														
21'-6"	944.4	1046.6	1144.1	1237.5	1327.6	1414.7	1499.2														
22'-0"	957.2	1060.8	1159.6	1254.3	1345.6	1433.8	1519.5														
22'-6"	969.7	1074.6	1174.7	1270.7	1363.1	1452.5	1539.3														
23'-0"	981.9	1088.1	1189.5	1286.6	1380.2	1470.8	1558.6														
23'-6"	993.7	1101.3	1203.8	1302.2	1396.9	1488.5	1577.4														
24'-0"	1005.3	1114.1	1217.8	1317.3	1413.1	1505.8	1595.7														
24'-6"	1016.4	1126.5	1231.3	1331.9	1428.8	1522.6	1613.5														
25'-0"	1027.3	1138.5	1244.5	1346.1	1444.1	1538.8	1630.7														
25'-6"	1037.8	1150.1	1257.2	1359.9	1458.8	1554.5	1647.4														
26'-0"	1047.9	1161.3	1269.4	1373.1	1473.0	1569.7	1663.4														
26'-6"	1057.6	1172.0	1281.2	1385.8	1486.7	1584.2	1678.8														
27'-0"	1066.9	1182.4	1292.4	1398.0	1499.7	1598.1	1693.6														
27'-6"	1075.8	1192.2	1303.2	1409.6	1512.2	1611.4	1707.7														
28'-0"	1084.2	1201.5	1313.4	1420.7	1524.0	1624.0	1721.0														
28'-6"	1092.1	1210.3	1323.0	1431.1	1535.2	1635.9	1733.6														
29'-0"	1099.6	1218.6	1332.0	1440.8	1545.7	1647.1	1745.4														
29'-6"	1106.5	1226.2	1340.4	1449.9	1555.4	1657.4	1756.4														
30'-0"	1112.8	1233.3	1348.1	1458.2	1564.3	1666.9	1766.5														

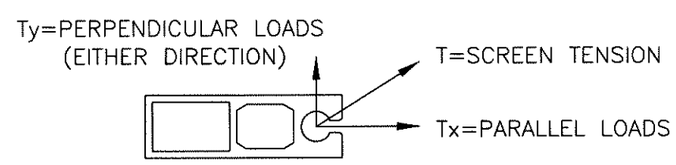

LOADS ON EXISTING STRUCTURE

SIDE, SLIDE, GROMMET, & STRAP INSTALLATIONS

NOTE: SIDE RAIL SECTION SHOWN, SLIDE TRACK, GROMMET, AND STRAP SCREEN LOADS APPLIED ALONG ANCHOR LINE.

FRANK L. BENNARDO, P.E.
PE# 0046549
LICENSE No PE0046549
10/20/2017
IF PICKED, CERTIFIED ALL ACCESS BELOW
FRANK L. BENNARDO, P.E.
46549
STATE OF FLORIDA
PROFESSIONAL ENGINEER
ENGINEERING EXPRESS
CORPORATE OFFICE:
160 SW 12th AVE, SUITE 206
DEERFIELD BEACH, FL 33442
P: (954) 354-0660 F: (954) 354-0443
E: HELLO@ENGINEERINGEXPRESS.COM
ENGINEERINGEXPRESS.COM
CERT OF AUTH #9885

STORM SMART INDUSTRIES, INC.
6182 IDLEWILD STREET
FORT MYERS , FL
(239) 938-1000

STORM CATCHER WIND ABATEMENT SYSTEM FL11291.2 HVHZ
-
-, FL

REMARKS	DRWN	CHKD	DATE
INIT ISSUE	RWN	FLB	10/16/17

THIS DOCUMENT IS THE PROPERTY OF ENGINEERING EXPRESS, AND SHALL NOT BE REPRODUCED IN WHOLE OR PART WITHOUT WRITTEN CONSENT OF ENGINEERING EXPRESS. ALTERATIONS, ADDITIONS, OR OTHER MARKINGS TO THIS DOCUMENT ARE NOT PERMITTED AND INVALIDATE OUR CERTIFICATION.

COPYRIGHT ENGINEERING EXPRESS ®

16-3080

SCALE: NTS UNLESS NOTED

10/20/2017 - 3:07pm zachr V:\Projects\16-3080 Storm Catcher Wind Abatement System FL11291-R4\WP\2017 FBC Update\16-3080e-Dwg-11291.2.dwg

TABLE 2

LOAD ON EXISTING STRUCTURE FROM SCREEN SYSTEM
Ty = PERPENDICULAR LOADS (PLF)

SPAN	DESIGN PRESSURE																				
	30 PSF	35 PSF	40 PSF	45 PSF	50 PSF	55 PSF	60 PSF	65 PSF	70 PSF	75 PSF	80 PSF	85 PSF	90 PSF	95 PSF	100 PSF	105 PSF	110 PSF	115 PSF	120 PSF	125 PSF	130 PSF
3'-0"	45.0	52.5	60.0	67.5	75.0	82.5	90.0	97.5	105.0	112.5	120.0	127.5	135.0	142.5	150.0	157.5	165.0	172.5	180.0	187.5	195.0
3'-6"	52.5	61.3	70.0	78.8	87.5	96.3	105.0	113.8	122.5	131.3	140.0	148.8	157.5	166.3	175.0	183.8	192.5	201.3	210.0	218.8	227.5
4'-0"	60.0	70.0	80.0	90.0	100.0	110.0	120.0	130.0	140.0	150.0	160.0	170.0	180.0	190.0	200.0	210.0	220.0	230.0	240.0	250.0	260.0
4'-6"	67.5	78.8	90.0	101.3	112.5	123.8	135.0	146.3	157.5	168.8	180.0	191.3	202.5	213.8	225.0	236.3	247.5	258.8	270.0	281.3	292.5
5'-0"	75.0	87.5	100.0	112.5	125.0	137.5	150.0	162.5	175.0	187.5	200.0	212.5	225.0	237.5	250.0	262.5	275.0	287.5	300.0	312.5	325.0
5'-6"	82.5	96.3	110.0	123.8	137.5	151.3	165.0	178.8	192.5	206.3	220.0	233.8	247.5	261.3	275.0	288.8	302.5	316.3	330.0	343.8	357.5
6'-0"	90.0	105.0	120.0	135.0	150.0	165.0	180.0	195.0	210.0	225.0	240.0	255.0	270.0	285.0	300.0	315.0	330.0	345.0	360.0	375.0	390.0
6'-6"	97.5	113.8	130.0	146.3	162.5	178.8	195.0	211.3	227.5	243.8	260.0	276.3	292.5	308.8	325.0	341.3	357.5	373.8	390.0	406.3	422.5
7'-0"	105.0	122.5	140.0	157.5	175.0	192.5	210.0	227.5	245.0	262.5	280.0	297.5	315.0	332.5	350.0	367.5	385.0	402.5	420.0	437.5	455.0
7'-6"	112.5	131.3	150.0	168.8	187.5	206.3	225.0	243.8	262.5	281.3	300.0	318.8	337.5	356.3	375.0	393.8	412.5	431.3	450.0	468.8	487.5
8'-0"	120.0	140.0	160.0	180.0	200.0	220.0	240.0	260.0	280.0	300.0	320.0	340.0	360.0	380.0	400.0	420.0	440.0	460.0	480.0	500.0	520.0
8'-6"	127.5	148.8	170.0	191.3	212.5	233.8	255.0	276.3	297.5	318.8	340.0	361.3	382.5	403.8	425.0	446.3	467.5	488.8	510.0	531.3	552.5
9'-0"	135.0	157.5	180.0	202.5	225.0	247.5	270.0	292.5	315.0	337.5	360.0	382.5	405.0	427.5	450.0	472.5	495.0	517.5	540.0	562.5	585.0
9'-6"	142.5	166.3	190.0	213.8	237.5	261.3	285.0	308.8	332.5	356.3	380.0	403.8	427.5	451.3	475.0	498.8	522.5	546.3	570.0	593.8	617.5
10'-0"	150.0	175.0	200.0	225.0	250.0	275.0	300.0	325.0	350.0	375.0	400.0	425.0	450.0	475.0	500.0	525.0	550.0	575.0	600.0	625.0	650.0
10'-6"	157.5	183.8	210.0	236.3	262.5	288.8	315.0	341.3	367.5	393.8	420.0	446.3	472.5	498.8	525.0	551.3	577.5	603.8	630.0	656.3	682.5
11'-0"	165.0	192.5	220.0	247.5	275.0	302.5	330.0	357.5	385.0	412.5	440.0	467.5	495.0	522.5	550.0	577.5	605.0	632.5	660.0	687.5	715.0
11'-6"	172.5	201.3	230.0	258.8	287.5	316.3	345.0	373.8	402.5	431.3	460.0	488.8	517.5	546.3	575.0	603.8	632.5	661.3	690.0	718.8	747.5
12'-0"	180.0	210.0	240.0	270.0	300.0	330.0	360.0	390.0	420.0	450.0	480.0	510.0	540.0	570.0	600.0	630.0	660.0	690.0	720.0	750.0	780.0
12'-6"	187.5	218.8	250.0	281.3	312.5	343.8	375.0	406.3	437.5	468.8	500.0	531.3	562.5	593.8	625.0	656.3	687.5	718.8	750.0	781.3	812.5
13'-0"	195.0	227.5	260.0	292.5	325.0	357.5	390.0	422.5	455.0	487.5	520.0	552.5	585.0	617.5	650.0	682.5	715.0	747.5	780.0	812.5	845.0
13'-6"	202.5	236.3	270.0	303.8	337.5	371.3	405.0	438.8	472.5	506.3	540.0	573.8	607.5	641.3	675.0	708.8	742.5	776.3	810.0	843.8	877.5
14'-0"	210.0	245.0	280.0	315.0	350.0	385.0	420.0	455.0	490.0	525.0	560.0	595.0	630.0	665.0	700.0	735.0	770.0	805.0	840.0	875.0	910.0
14'-6"	217.5	253.8	290.0	326.3	362.5	398.8	435.0	471.3	507.5	543.8	580.0	616.3	652.5	688.8	725.0	761.3	797.5	833.8	870.0	906.3	942.5
15'-0"	225.0	262.5	300.0	337.5	375.0	412.5	450.0	487.5	525.0	562.5	600.0	637.5	675.0	712.5	750.0	787.5	825.0	862.5	900.0	937.5	975.0
15'-6"	232.5	271.3	310.0	348.8	387.5	426.3	465.0	503.8	542.5	581.3	620.0	658.8	697.5	736.3	775.0	813.8	852.5	891.3	930.0	968.8	1007.5
16'-0"	240.0	280.0	320.0	360.0	400.0	440.0	480.0	520.0	560.0	600.0	640.0	680.0	720.0	760.0	800.0	840.0	880.0	920.0	960.0	1000.0	1040.0
16'-6"	247.5	288.8	330.0	371.3	412.5	453.8	495.0														
17'-0"	255.0	297.5	340.0	382.5	425.0	467.5	510.0														
17'-6"	262.5	306.3	350.0	393.8	437.5	481.3	525.0														
18'-0"	270.0	315.0	360.0	405.0	450.0	495.0	540.0														
18'-6"	277.5	323.8	370.0	416.3	462.5	508.8	555.0														
19'-0"	285.0	332.5	380.0	427.5	475.0	522.5	570.0														
19'-6"	292.5	341.3	390.0	438.8	487.5	536.3	585.0														
20'-0"	300.0	350.0	400.0	450.0	500.0	550.0	600.0														
20'-6"	307.5	358.8	410.0	461.3	512.5	563.8	615.0														
21'-0"	315.0	367.5	420.0	472.5	525.0	577.5	630.0														
21'-6"	322.5	376.3	430.0	483.8	537.5	591.3	645.0														
22'-0"	330.0	385.0	440.0	495.0	550.0	605.0	660.0														
22'-6"	337.5	393.8	450.0	506.3	562.5	618.8	675.0														
23'-0"	345.0	402.5	460.0	517.5	575.0	632.5	690.0														
23'-6"	352.5	411.3	470.0	528.8	587.5	646.3	705.0														
24'-0"	360.0	420.0	480.0	540.0	600.0	660.0	720.0														
24'-6"	367.5	428.8	490.0	551.3	612.5	673.8	735.0														
25'-0"	375.0	437.5	500.0	562.5	625.0	687.5	750.0														
25'-6"	382.5	446.3	510.0	573.8	637.5	701.3	765.0														
26'-0"	390.0	455.0	520.0	585.0	650.0	715.0	780.0														
26'-6"	397.5	463.8	530.0	596.3	662.5	728.8	795.0														
27'-0"	405.0	472.5	540.0	607.5	675.0	742.5	810.0														
27'-6"	412.5	481.3	550.0	618.8	687.5	756.3	825.0														
28'-0"	420.0	490.0	560.0	630.0	700.0	770.0	840.0														
28'-6"	427.5	498.8	570.0	641.3	712.5	783.8	855.0														
29'-0"	435.0	507.5	580.0	652.5	725.0	797.5	870.0														
29'-6"	442.5	516.3	590.0	663.8	737.5	811.3	885.0														
30'-0"	450.0	525.0	600.0	675.0	750.0	825.0	900.0														

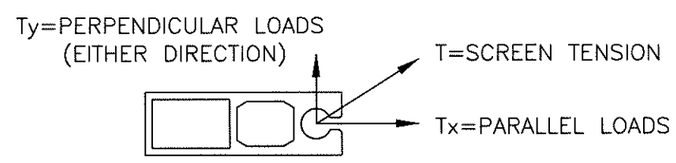

LOADS ON EXISTING STRUCTURE

SIDE, SLIDE, GROMMET, & STRAP INSTALLATIONS

NOTE: SIDE RAIL SECTION SHOWN, SLIDE TRACK, GROMMET, AND STRAP SCREEN LOADS APPLIED ALONG ANCHOR LINE.

FRANK L. BENNARDO, P.E.
PE# 0046549
10/20/2017
FRANK L. BENNARDO, P.E.
46549
STATE OF FLORIDA
PROFESSIONAL ENGINEER
No PE0046549
ENGINEERING EXPRESS
CORPORATE OFFICE:
160 SW 12th AVE, SUITE 106
DEERFIELD BEACH, FL 33442
P: (954) 354-0660 F: (954) 354-0443
E: HELLO@ENGINEERINGEXPRESS.COM
ENGINEERINGEXPRESS.COM
CERT OF AUTH #9685

STORM SMART INDUSTRIES, INC.
6182 IDLEWILD STREET
FORT MYERS , FL
(239) 938-1000

STORM CATCHER WIND ABATEMENT SYSTEM FL11291.2 HVHZ
-
-, FL

REMARKS	DRWN	CHKD	DATE
INIT ISSUE	RWN	FLB	10/18/17

THIS DOCUMENT IS THE PROPERTY OF ENGINEERING EXPRESS, AND SHALL NOT BE REPRODUCED IN WHOLE OR PART WITHOUT WRITTEN CONSENT OF ENGINEERING EXPRESS. ALTERATIONS, ADDITIONS, OR OTHER MARKINGS TO THIS DOCUMENT ARE NOT PERMITTED AND INVALIDATE OUR CERTIFICATION.

COPYRIGHT ENGINEERING EXPRESS ®

16-3080

SCALE: NTS UNLESS NOTED

V:\Projects\16-3080 Storm Catcher Wind Abatement System FL11291-R4\WP\2017 FBC Update\16-3080e-Dwg-11291.2.dwg
zachr
10/20/2017 - 3:08pm

TABLE 3

MINIMUM SEPARATION FROM GLAZING VALUES

Fabric Span	LOAD (+PSF)																					
	30	35	40	45	50	55	60	65	70	75	80	85	90	95	100	105	110	115	120	125	130
3.00 ft	2.30"	2.37"	2.43"	2.49"	2.54"	2.59"	2.64"	2.68"	2.72"	2.76"	2.80"	2.84"	2.87"	2.91"	2.94"	2.97"	3.00"	3.03"	3.06"	3.09"	3.12"
3.50 ft	2.60"	2.68"	2.76"	2.83"	2.89"	2.95"	3.01"	3.06"	3.12"	3.17"	3.21"	3.26"	3.30"	3.34"	3.38"	3.42"	3.46"	3.50"	3.53"	3.57"	3.60"
4.00 ft	2.91"	3.01"	3.10"	3.18"	3.26"	3.33"	3.40"	3.47"	3.53"	3.59"	3.64"	3.70"	3.75"	3.80"	3.85"	3.89"	3.94"	3.98"	4.03"	4.07"	4.11"
4.50 ft	3.23"	3.35"	3.46"	3.55"	3.64"	3.73"	3.81"	3.89"	3.96"	4.03"	4.09"	4.16"	4.22"	4.28"	4.33"	4.39"	4.44"	4.49"	4.54"	4.59"	4.64"
5.00 ft	3.57"	3.70"	3.83"	3.94"	4.04"	4.14"	4.23"	4.32"	4.40"	4.48"	4.56"	4.63"	4.70"	4.77"	4.83"	4.90"	4.96"	5.02"	5.07"	5.13"	5.19"
5.50 ft	3.91"	4.07"	4.21"	4.34"	4.46"	4.57"	4.67"	4.77"	4.87"	4.96"	5.04"	5.12"	5.20"	5.28"	5.35"	5.43"	5.49"	5.56"	5.63"	5.69"	5.75"
6.00 ft	4.27"	4.45"	4.60"	4.75"	4.88"	5.01"	5.12"	5.24"	5.34"	5.44"	5.54"	5.63"	5.72"	5.81"	5.89"	5.97"	6.05"	6.12"	6.20"	6.27"	6.34"
6.50 ft	4.64"	4.83"	5.01"	5.17"	5.32"	5.46"	5.59"	5.71"	5.83"	5.94"	6.05"	6.15"	6.25"	6.35"	6.44"	6.53"	6.62"	6.70"	6.78"	6.86"	6.94"
7.00 ft	5.02"	5.23"	5.43"	5.60"	5.77"	5.92"	6.07"	6.20"	6.33"	6.46"	6.58"	6.69"	6.80"	6.90"	7.01"	7.10"	7.20"	7.29"	7.38"	7.47"	7.55"
7.50 ft	5.41"	5.64"	5.85"	6.05"	6.23"	6.39"	6.55"	6.70"	6.85"	6.98"	7.11"	7.24"	7.36"	7.47"	7.58"	7.69"	7.80"	7.90"	8.00"	8.09"	8.19"
8.00 ft	5.80"	6.06"	6.29"	6.50"	6.70"	6.88"	7.05"	7.22"	7.37"	7.52"	7.66"	7.80"	7.93"	8.05"	8.18"	8.29"	8.41"	8.52"	8.63"	8.73"	8.83"
8.50 ft	6.21"	6.48"	6.73"	6.96"	7.18"	7.37"	7.56"	7.74"	7.91"	8.07"	8.22"	8.37"	8.51"	8.65"	8.78"	8.91"	9.03"	9.15"	9.27"	9.38"	9.49"
9.00 ft	6.62"	6.92"	7.19"	7.43"	7.66"	7.88"	8.08"	8.27"	8.46"	8.63"	8.79"	8.95"	9.11"	9.25"	9.40"	9.53"	9.67"	9.80"	9.92"	10.04"	10.16"
9.50 ft	7.04"	7.36"	7.65"	7.92"	8.16"	8.39"	8.61"	8.82"	9.01"	9.20"	9.38"	9.55"	9.71"	9.87"	10.02"	10.17"	10.32"	10.45"	10.59"	10.72"	10.85"
10.00 ft	7.47"	7.81"	8.12"	8.40"	8.67"	8.92"	9.15"	9.37"	9.58"	9.78"	9.97"	10.15"	10.33"	10.50"	10.66"	10.82"	10.97"	11.12"	11.27"	11.41"	11.55"
10.50 ft	7.90"	8.27"	8.60"	8.90"	9.18"	9.45"	9.70"	9.93"	10.16"	10.37"	10.57"	10.77"	10.96"	11.14"	11.31"	11.48"	11.65"	11.80"	11.96"	12.11"	12.25"
11.00 ft	8.35"	8.73"	9.08"	9.41"	9.71"	9.99"	10.25"	10.50"	10.74"	10.97"	11.19"	11.39"	11.59"	11.79"	11.97"	12.15"	12.33"	12.50"	12.66"	12.82"	12.98"
11.50 ft	8.79"	9.20"	9.58"	9.92"	10.24"	10.54"	10.82"	11.08"	11.34"	11.58"	11.81"	12.03"	12.24"	12.44"	12.64"	12.83"	13.02"	13.20"	13.37"	13.54"	13.71"
12.00 ft	9.25"	9.68"	10.08"	10.44"	10.78"	11.10"	11.39"	11.67"	11.94"	12.20"	12.44"	12.67"	12.90"	13.11"	13.32"	13.52"	13.72"	13.91"	14.09"	14.27"	14.45"
12.50 ft	9.71"	10.17"	10.59"	10.97"	11.33"	11.66"	11.97"	12.27"	12.55"	12.82"	13.08"	13.33"	13.56"	13.79"	14.01"	14.22"	14.43"	14.63"	14.83"	15.02"	15.20"
13.00 ft	10.18"	10.66"	11.10"	11.51"	11.88"	12.23"	12.56"	12.88"	13.17"	13.46"	13.73"	13.99"	14.24"	14.48"	14.71"	14.93"	15.15"	15.36"	15.57"	15.77"	15.96"
13.50 ft	10.65"	11.16"	11.62"	12.05"	12.44"	12.81"	13.16"	13.49"	13.80"	14.10"	14.38"	14.66"	14.92"	15.17"	15.42"	15.65"	15.88"	16.10"	16.32"	16.53"	16.73"
14.00 ft	11.13"	11.67"	12.15"	12.60"	13.01"	13.40"	13.76"	14.11"	14.44"	14.75"	15.05"	15.34"	15.61"	15.88"	16.13"	16.38"	16.62"	16.86"	17.08"	17.30"	17.52"
14.50 ft	11.62"	12.18"	12.68"	13.15"	13.59"	13.99"	14.38"	14.74"	15.08"	15.41"	15.72"	16.02"	16.31"	16.59"	16.86"	17.12"	17.37"	17.61"	17.85"	18.08"	18.31"
15.00 ft	12.11"	12.69"	13.22"	13.71"	14.17"	14.59"	14.99"	15.37"	15.73"	16.07"	16.40"	16.72"	17.02"	17.31"	17.59"	17.86"	18.13"	18.38"	18.63"	18.87"	19.11"
15.50 ft	12.60"	13.22"	13.77"	14.28"	14.76"	15.20"	15.62"	16.01"	16.39"	16.75"	17.09"	17.42"	17.74"	18.04"	18.33"	18.62"	18.89"	19.16"	19.42"	19.67"	19.92"
16.00 ft	13.11"	13.74"	14.32"	14.86"	15.35"	15.82"	16.25"	16.66"	17.06"	17.43"	17.79"	18.13"	18.46"	18.78"	19.08"	19.38"	19.67"	19.95"	20.22"	20.48"	20.74"
16.50 ft	13.67"	14.34"	14.94"	15.50"	16.02"	16.50"	16.96"														
17.00 ft	14.27"	14.97"	15.61"	16.19"	16.73"	17.24"	17.72"														
17.50 ft	14.89"	15.62"	16.28"	16.90"	17.46"	18.00"	18.50"														
18.00 ft	15.52"	16.28"	16.98"	17.62"	18.21"	18.77"	19.29"														
18.50 ft	16.17"	16.97"	17.69"	18.36"	18.98"	19.56"	20.11"														
19.00 ft	16.83"	17.66"	18.42"	19.12"	19.77"	20.37"	20.94"														
19.50 ft	17.51"	18.38"	19.17"	19.90"	20.57"	21.21"	21.80"														
20.00 ft	18.21"	19.11"	19.94"	20.70"	21.40"	22.06"	22.68"														
20.50 ft	18.92"	19.87"	20.72"	21.51"	22.25"	22.93"	23.58"														
21.00 ft	19.65"	20.64"	21.53"	22.35"	23.12"	23.83"	24.50"														
21.50 ft	20.40"	21.43"	22.36"	23.21"	24.01"	24.75"	25.45"														
22.00 ft	21.18"	22.24"	23.21"	24.10"	24.92"	25.69"	26.42"														
22.50 ft	21.97"	23.07"	24.08"	25.00"	25.86"	26.66"	27.42"														
23.00 ft	22.78"	23.93"	24.97"	25.93"	26.83"	27.66"	28.44"														
23.50 ft	23.62"	24.81"	25.90"	26.89"	27.82"	28.68"	29.50"														
24.00 ft	24.48"	25.72"	26.84"	27.88"	28.84"	29.74"	30.58"														
24.50 ft	25.36"	26.65"	27.82"	28.89"	29.89"	30.82"	31.70"														
25.00 ft	26.28"	27.61"	28.82"	29.93"	30.97"	31.94"	32.85"														
25.50 ft	27.22"	28.60"	29.85"	31.01"	32.08"	33.09"	34.03"														
26.00 ft	28.19"	29.62"	30.92"	32.12"	33.23"	34.27"	35.25"														
26.50 ft	29.19"	30.67"	32.02"	33.26"	34.42"	35.50"	36.51"														
27.00 ft	30.22"	31.76"	33.16"	34.45"	35.64"	36.76"	37.82"														
27.50 ft	31.29"	32.89"	34.34"	35.67"	36.91"	38.07"	39.16"														
28.00 ft	32.40"	34.05"	35.56"	36.94"	38.23"	39.43"	40.56"														
28.50 ft	33.55"	35.26"	36.82"	38.26"	39.59"	40.83"	42.01"														
29.00 ft	34.74"	36.52"	38.14"	39.62"	41.00"	42.30"	43.51"														
29.50 ft	35.98"	37.83"	39.50"	41.04"	42.48"	43.81"	45.07"														
30.00 ft	37.28"	39.19"	40.93"	42.52"	44.01"	45.40"	46.70"														

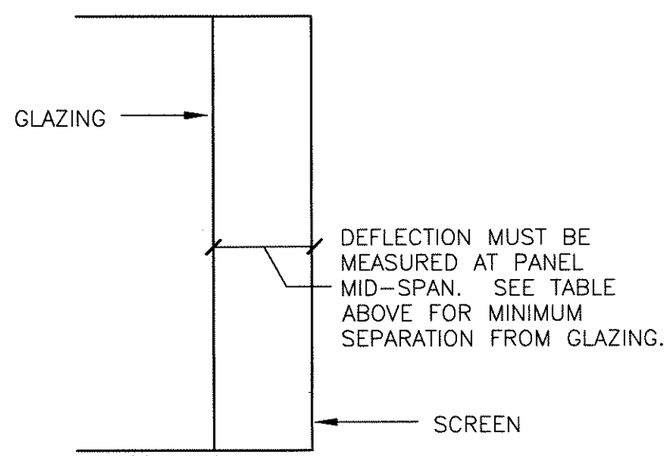

DEFLECTION DIAGRAM

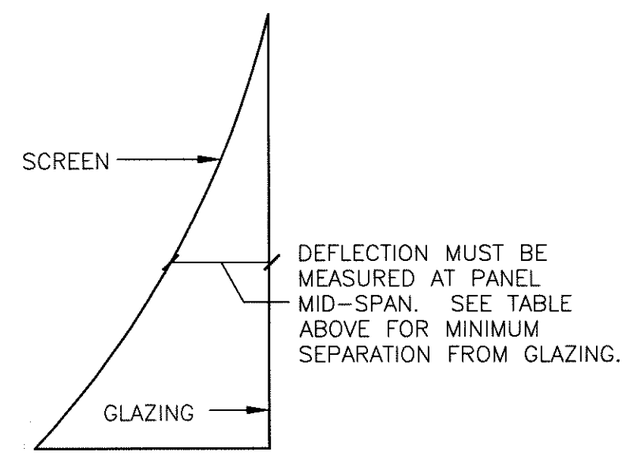

DEFLECTION DIAGRAM

FRANK L. BENNARDO, P.E.
REG. 0046549
10/20/2017
FRANK L. BENNARDO, P.E.
46549
STATE OF FLORIDA
ENGINEERING EXPRESS
CORPORATE OFFICE:
160 SW 12th AVE, SUITE 205
DEERFIELD BEACH, FL 33442
P: (954) 354-0660 F: (954) 354-0443
E: HELLO@ENGINEERINGEXPRESS.COM
ENGINEERINGEXPRESS.COM
CERT OF AUTH #9685

STORM SMART INDUSTRIES, INC.
6182 IDLEWILD STREET
FORT MYERS , FL
(239) 938-1000

STORM CATCHER WIND ABATEMENT SYSTEM FL11291.2 HVHZ

-
-, FL

REMARKS	DRWN	CHKD	DATE
INIT ISSUE	RWN	FLB	10/18/17

THIS DOCUMENT IS THE PROPERTY OF ENGINEERING EXPRESS, AND SHALL NOT BE REPRODUCED IN WHOLE OR PART WITHOUT WRITTEN CONSENT OF ENGINEERING EXPRESS. ALTERATIONS, ADDITIONS, OR OTHER MARKINGS TO THIS DOCUMENT ARE NOT PERMITTED AND INVALIDATE OUR CERTIFICATION.

COPYRIGHT ENGINEERING EXPRESS ©

16-3080

SCALE: NTS UNLESS NOTED

10/20/2017 - 3:09pm zachr V:\Projects\16-3080 Storm Catcher Wind Abatement System FL11291-R4\WP\2017 FBC Update\16-3080e-Dwg-11291.2.dwg

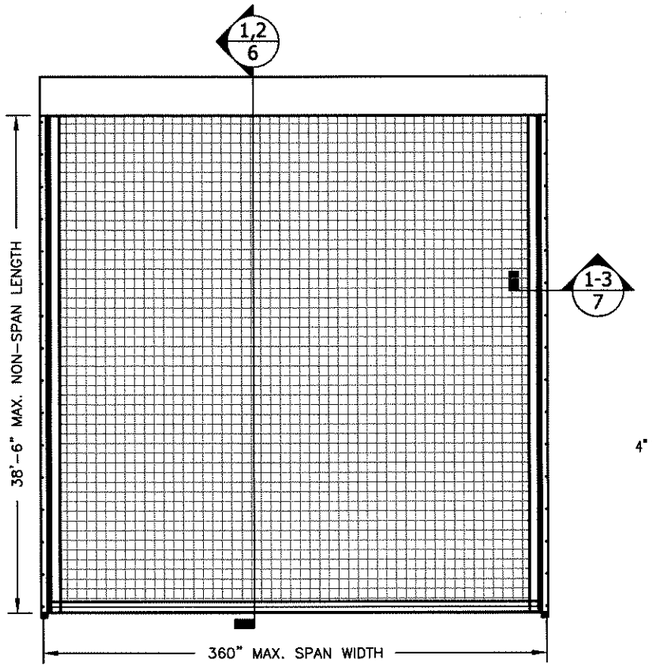

ROLL-UP SCREEN SINGLE PANEL - ELEVATION

TYPICAL SINGLE SPAN UP TO 24'-0" INSTALLATION - N.T.S.

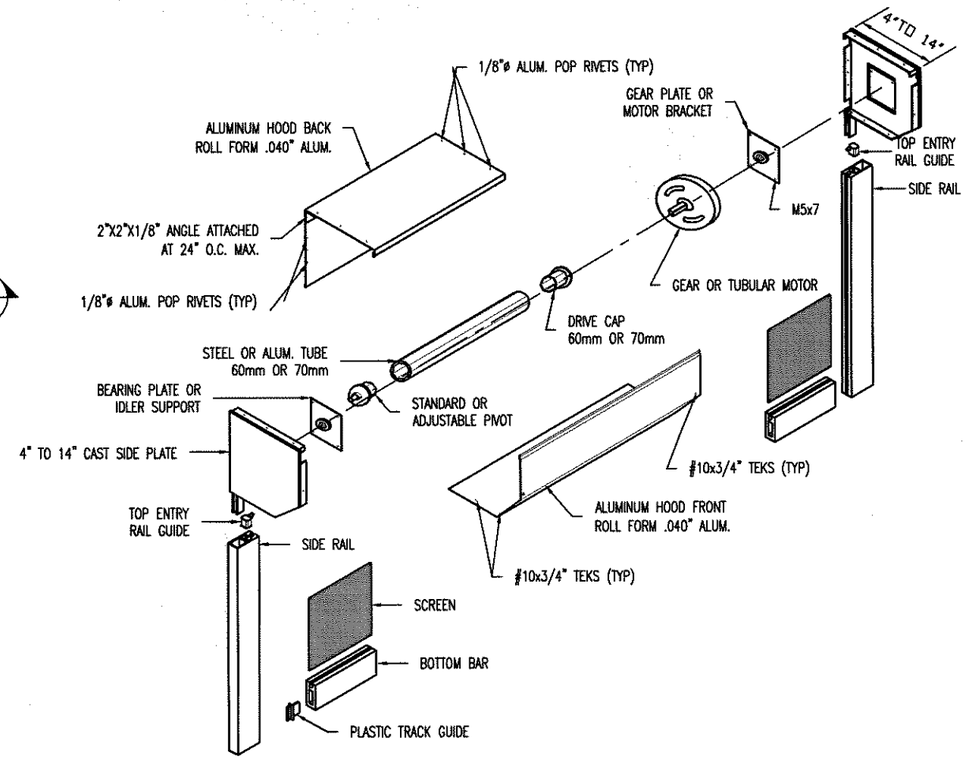

ROLL-UP COMPONENTS AND END CAP ASSEMBLY DETAIL

ROLL-UP SCREEN INSTALLATION - N.T.S.

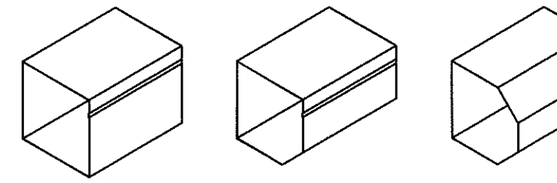

ALUMINUM BOX COVER STYLES

ROLL-UP SCREEN INSTALLATION - SCALE: N.T.S.

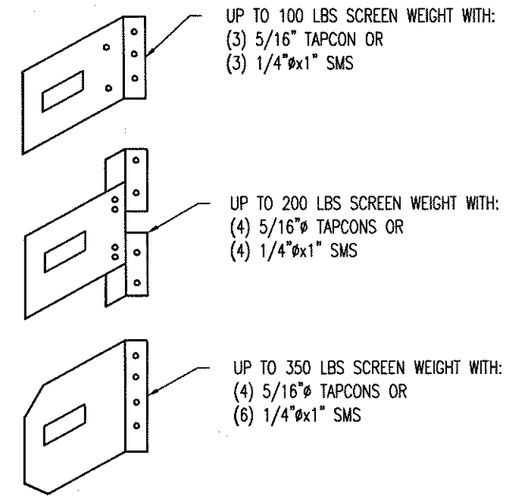

MOUNTING BRACKET SHAPES

ROLL-UP SCREEN INSTALLATIONS - N.T.S.

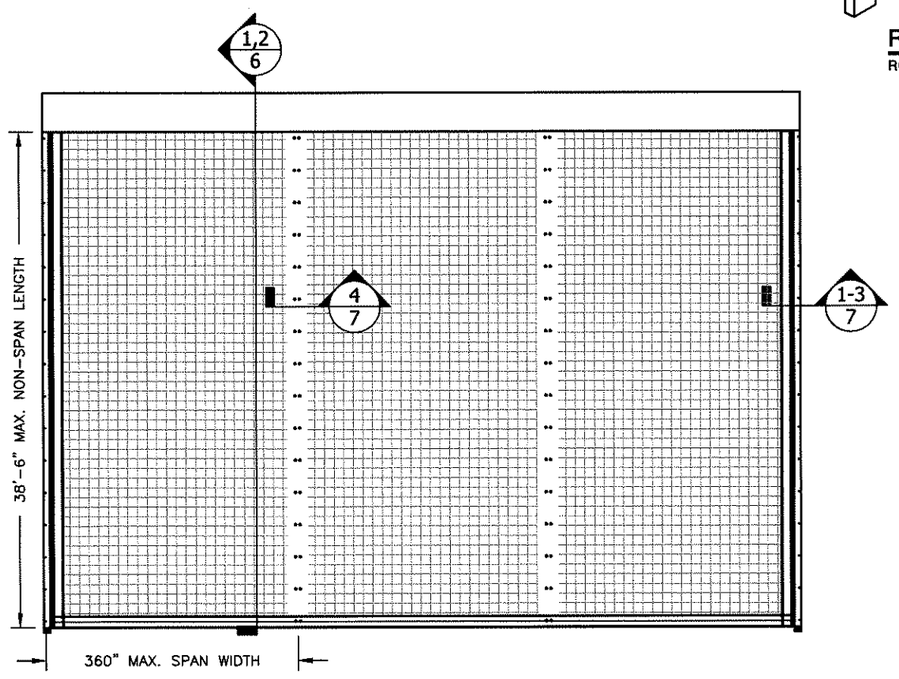

ROLL-UP SCREEN MULTIPLE UNIT - ELEVATION

APPROVED INTERMEDIATE MULLION REQUIRED FOR INSTALLATION - N.T.S.

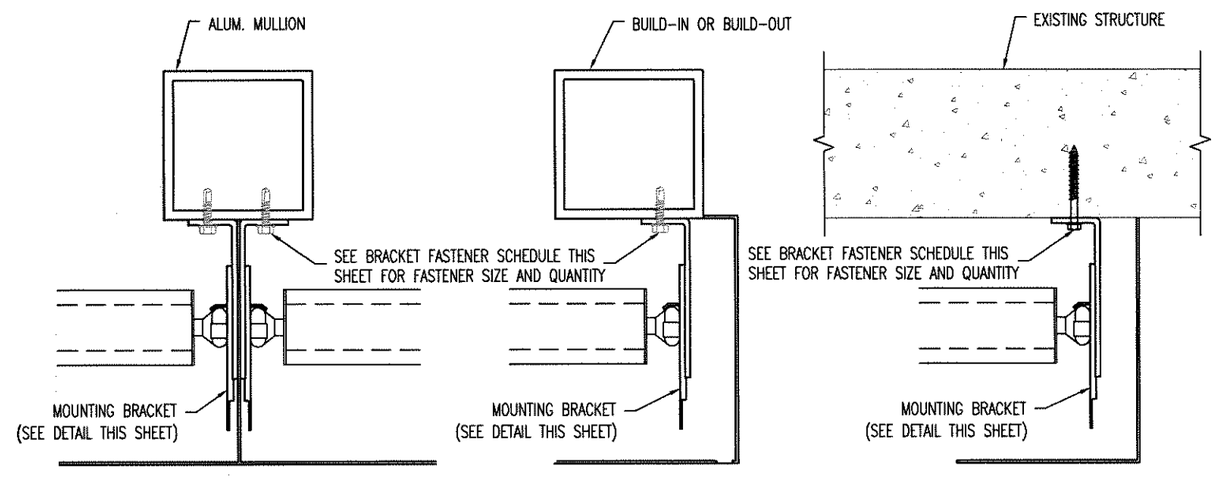

MOUNTING BRACKET INSTALLATION

ROLL-UP SCREEN - N.T.S.

FRANK L. BENNARDO, P.E.
PE# 0046549
LICENSE
10/20/2017
IF CHECKED, CERTIFYING P.E. APPEARS BELOW
FRANK L. BENNARDO, P.E.
46549
STATE OF FLORIDA
PROFESSIONAL ENGINEER

ENGINEERING EXPRESS
CORPORATE OFFICE:
160 SW 12th AVE, SUITE 106
DEERFIELD BEACH, FL 33442
P: (954) 354-0660 F: (954) 354-0443
E: HELLO@ENGINEERINGEXPRESS.COM
ENGINEERINGEXPRESS.COM
CERT OF AUTH #9885

STORM SMART INDUSTRIES, INC.
6182 IDLEWILD STREET
FORT MYERS , FL
(239) 938-1000

STORM CATCHER WIND ABATEMENT SYSTEM FL11291.2 HVHZ
-
-, FL

REMARKS	DRWN	CHKD	DATE
INIT ISSUE	RWN	FLB	10/18/17

THIS DOCUMENT IS THE PROPERTY OF ENGINEERING EXPRESS, AND SHALL NOT BE REPRODUCED IN WHOLE OR PART WITHOUT WRITTEN CONSENT OF ENGINEERING EXPRESS. ALTERATIONS, ADDITIONS, OR OTHER MARKINGS TO THIS DOCUMENT ARE NOT PERMITTED AND INVALIDATE OUR CERTIFICATION.

COPYRIGHT ENGINEERING EXPRESS ©

16-3080

SCALE: NTS UNLESS NOTED

V:\Projects\16-3080 Storm Catcher Wind Abatement System FL11291-R4\WP\2017 FBC Update\16-3080e-Dwg-11291.2.dwg
zachr
10/20/2017 - 3:09pm

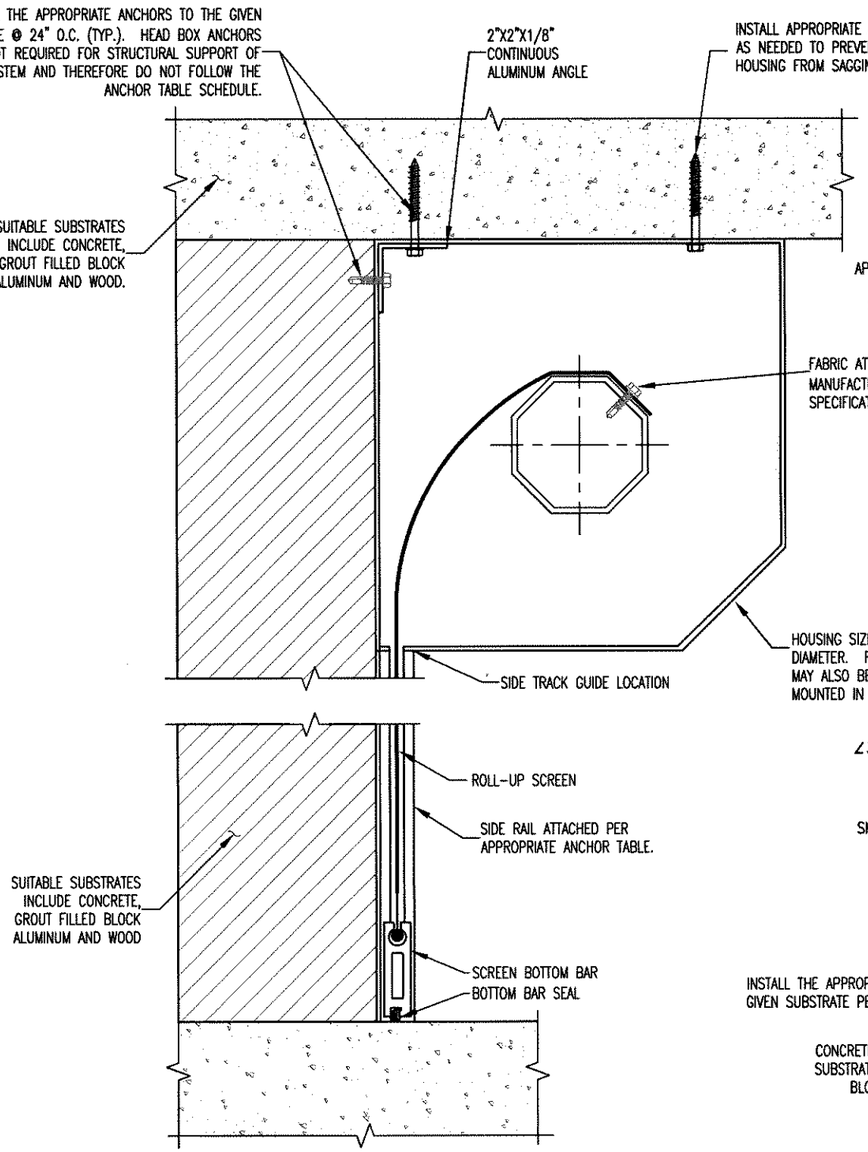

1/6 ROLL-UP HURRICANE SCREEN
N.T.S. SECTION VIEW

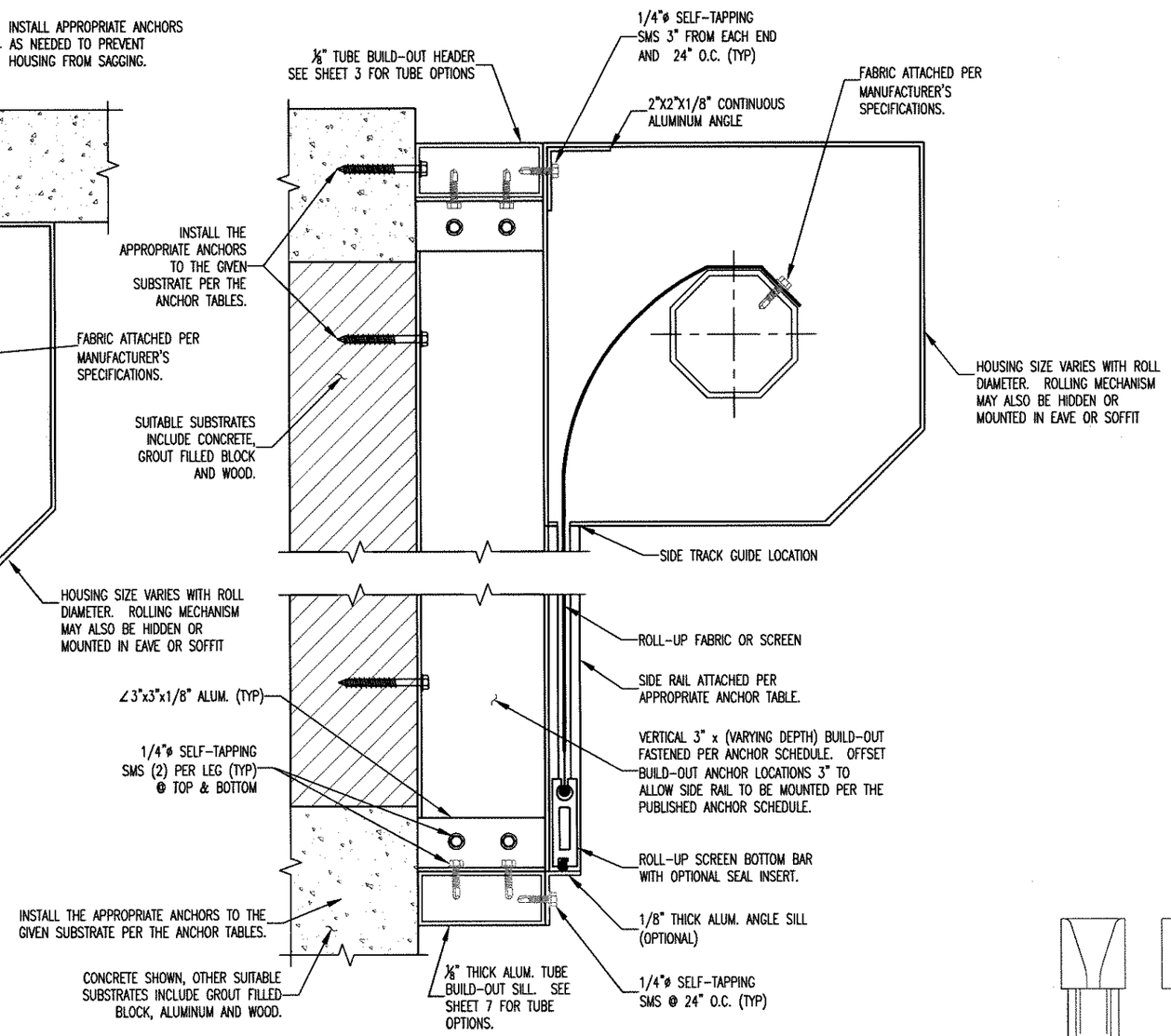

2/6 BUILD-OUT OPTION ROLL-UP HURRICANE SCREEN
N.T.S. SECTION VIEW

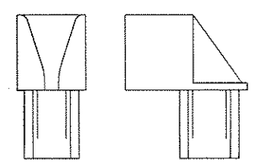

8/6 SIDE RAIL GUIDE (PLASTIC)
N.T.S. SECTION VIEW

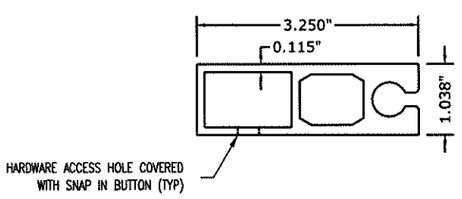

3/6 SIDE RAIL WITH SNAP IN BUTTONS
N.T.S. 6063-T6 SECTION VIEW

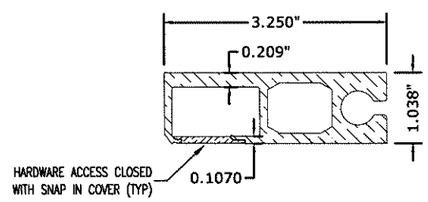

4/6 SIDE RAIL WITH SNAP IN COVER
N.T.S. 6063-T6 SECTION VIEW

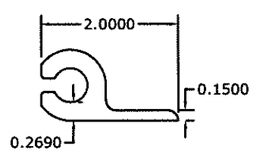

5/6 SLIDE TRACK
N.T.S. SECTION VIEW
6063-T6

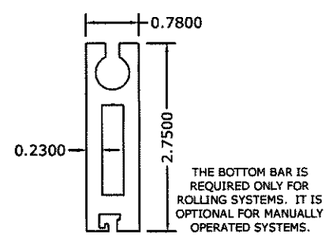

6/6 ROLL-UP BOTTOM BAR
N.T.S. 6063-T6 SECTION VIEW

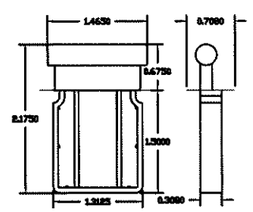

7/6 BOTTOM BAR TRACK GUIDE (PLASTIC)
N.T.S. SECTION VIEW

FRANK L. BENNARDO, P.E.
REG# PE0046549
10/20/2017
IF CHECKED, CERTIFICATE AWAING BELOW
FRANK L. BENNARDO, P.E.
46549

ENGINEERING EXPRESS®
CORPORATE OFFICE:
160 SW 12th AVE, SUITE 106
DEERFIELD BEACH, FL 33442
P: (954) 354-0660 F: (954) 354-0443
E: HELLO@ENGINEERINGEXPRESS.COM
ENGINEERINGEXPRESS.COM
CERT OF AUTH #9885

STORM SMART INDUSTRIES, INC.

6182 IDLEWILD STREET
FORT MYERS , FL
(239) 938-1000

STORM CATCHER WIND ABATEMENT SYSTEM FL11291.2 HVHZ

-
-, FL

REMARKS	DRWN	CHKD	DATE
INIT ISSUE	RWN	FLB	10/18/17

THIS DOCUMENT IS THE PROPERTY OF ENGINEERING EXPRESS, AND SHALL NOT BE REPRODUCED IN WHOLE OR PART WITHOUT WRITTEN CONSENT OF ENGINEERING EXPRESS. ALTERATIONS, ADDITIONS, OR OTHER MARKINGS TO THIS DOCUMENT ARE NOT PERMITTED AND INVALIDATE OUR CERTIFICATION.
COPYRIGHT ENGINEERING EXPRESS ©

16-3080

SCALE: NTS UNLESS NOTED

10/20/2017 - 3:09pm zachr V:\Projects\16-3080 Storm Catcher Wind Abatement System FL11291-R4\WP\2017 FBC Update\16-3080e-Dwg-11291.2.dwg

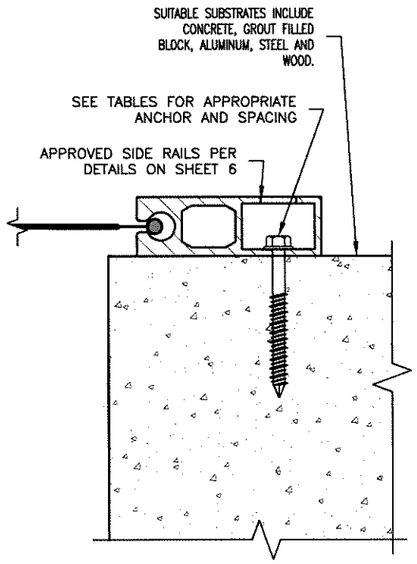

1 WALL MOUNT - SECTION
TYPICAL SIDE RAIL INSTALLATION (OPTION 4) - N.T.S.

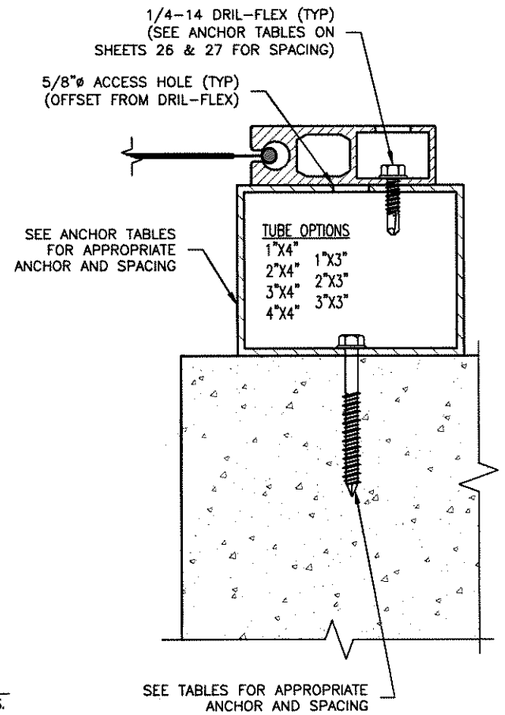

2 BUILD-OUT MOUNT - SECTION
SIDE RAIL INSTALLATION (OPTION 6) - N.T.S.

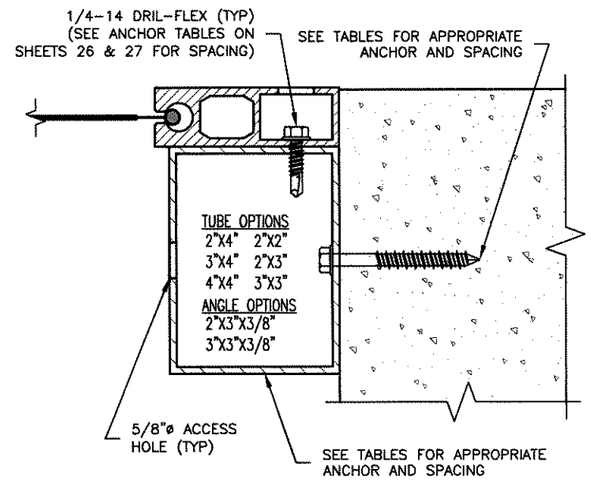

3 BUILD-IN MOUNT - SECTION
SIDE RAIL INSTALLATION (OPTION 5) - N.T.S.

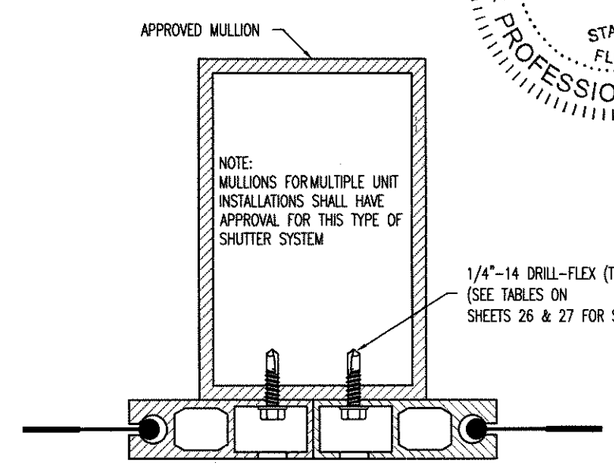

4 MULLION MOUNT - SECTION
ROLL-UP SCREEN INSTALLATION (OPTION 4) - N.T.S.

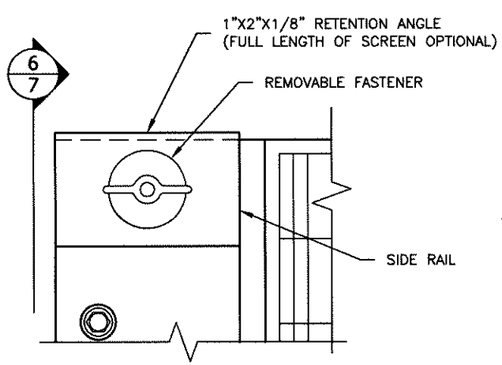

5 RETENTION ANGLE - DETAIL
SIDE RAIL INSTALLATION (OPTION 1) - N.T.S.

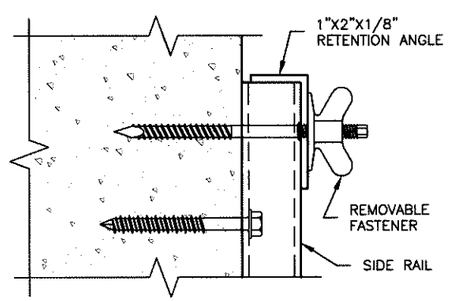

6 RETENTION ANGLE - SECTION
SIDE RAIL INSTALLATION (OPTION 1) - N.T.S.

NOTE: THE RETENTION ANGLES ARE NOT REQUIRED WHERE THE SLIDE SCREEN TRACK ENDS ARE AGAINST THE EXISTING STRUCTURE.

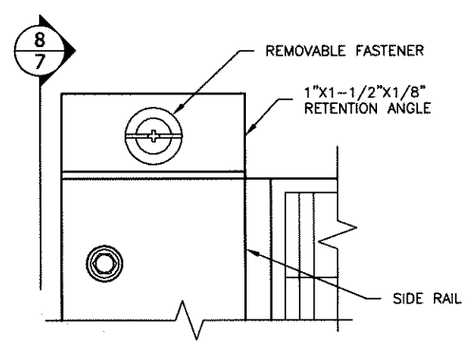

7 RETENTION ANGLE - DETAIL
SIDE RAIL INSTALLATION (OPTION 1) - N.T.S.

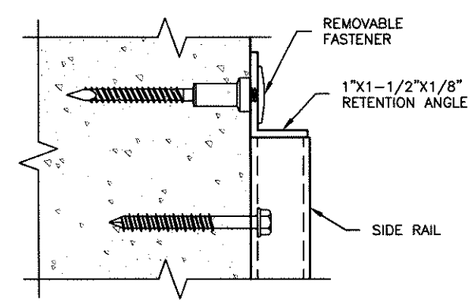

8 RETENTION ANGLE - SECTION
SIDE RAIL INSTALLATION (OPTION 2) - N.T.S.

NOTE: THE RETENTION ANGLES ARE NOT REQUIRED WHERE THE SLIDE SCREEN TRACK ENDS ARE AGAINST THE EXISTING STRUCTURE.

FRANK L. BENNARDO, P.E.
PE#:0046549
10/20/2017
IF CHECKED, CERTIFICATE APPEARS BELOW
FRANK L. BENNARDO, P.E.
46549
FRANK L. BENNARDO LICENSE No PE0046549 STATE OF FLORIDA PROFESSIONAL ENGINEER
ENGINEERING EXPRESS®
CORPORATE OFFICE:
160 SW 12th AVE, SUITE 106
DEERFIELD BEACH, FL 33442
P: (954) 354-0660 F: (954) 354-0443
E: HELLO@ENGINEERINGEXPRESS.COM
ENGINEERINGEXPRESS.COM
CERT OF AUTH #9885

STORM SMART INDUSTRIES, INC.
6182 IDLEWILD STREET
FORT MYERS , FL
(239) 938-1000

STORM CATCHER WIND ABATEMENT SYSTEM FL11291.2 HVHZ
-
-, FL

REMARKS	DRWN	CHKD	DATE
INIT ISSUE	RWN	FLB	10/18/17

THIS DOCUMENT IS THE PROPERTY OF ENGINEERING EXPRESS, AND SHALL NOT BE REPRODUCED IN WHOLE OR PART WITHOUT WRITTEN CONSENT OF ENGINEERING EXPRESS. ALTERATIONS, ADDITIONS, OR OTHER MARKINGS TO THIS DOCUMENT ARE NOT PERMITTED AND INVALIDATE OUR CERTIFICATION.
COPYRIGHT ENGINEERING EXPRESS ®

16-3080

SCALE: NTS UNLESS NOTED

10/20/2017 - 3:09pm zachr V:\Projects\16-3080 Storm Catcher Wind Abatement System FL11291-R4\WP\2017 FBC Update\16-3080e-Dwg-11291.2.dwg

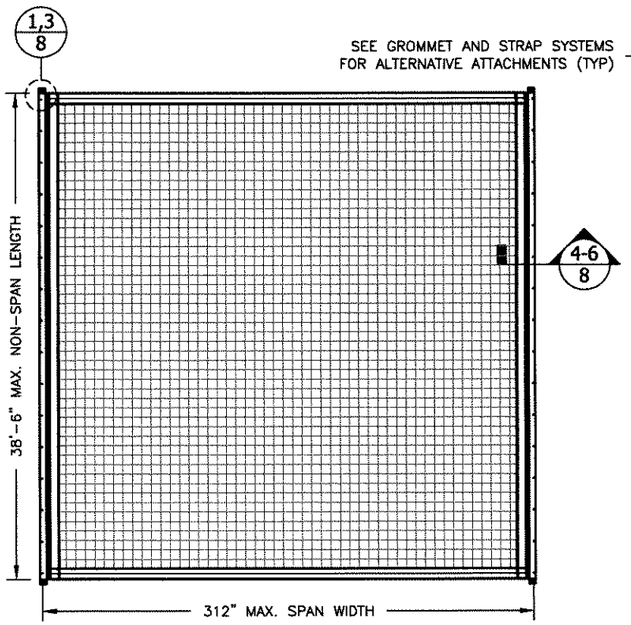

SLIDE SCREEN SINGLE PANEL - ELEVATION

TYPICAL 2 SIDED ATTACHMENT - VERTICAL OR HORIZONTAL INSTALLATION - N.T.S.

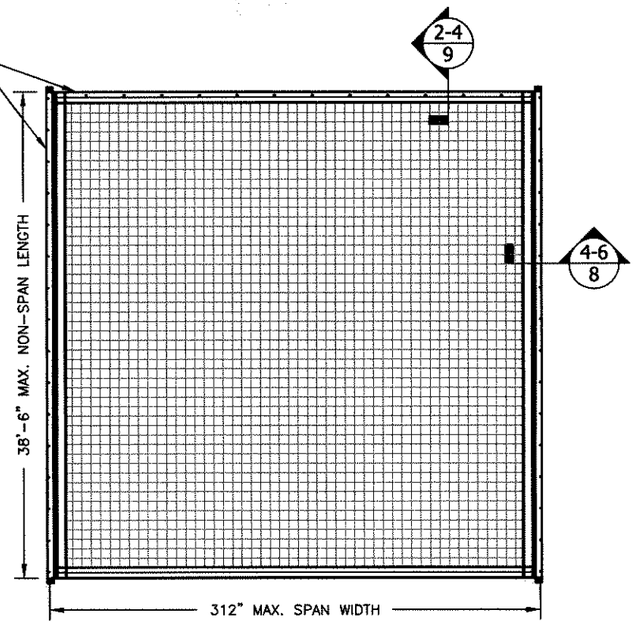

SLIDE SCREEN SINGLE PANEL - ELEVATION

3 OR 4 SIDED ATTACHMENT -VERTICAN OR HORIZONTAL INSTALLATION - SCALE N.T.S.

NOTE: FOR 4 SIDED ATTACHMENT THE SPAN IS IN THE SHORT DIMENSION BEWTEEN FASTENERS.

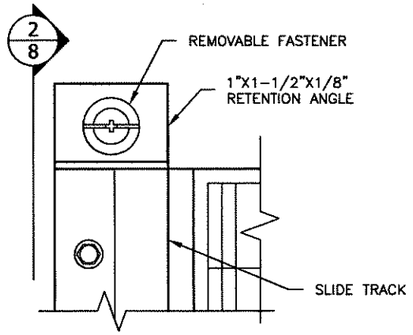

1 RETENTION ANGLE - DETAIL

SLIDE TRACK INSTALLATION (OPTIONAL) - N.T.S.

NOTE: THE RETENTION ANGLES ARE NOT REQUIRED WHERE THE SLIDE SCREEN TRACK ENDS ARE AGAINST THE EXISTING STRUCTURE.

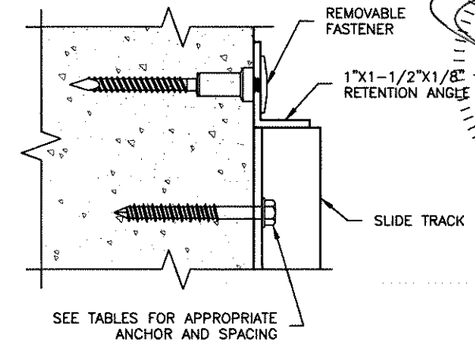

2 RETENTION ANGLE - SECTION

SLIDE TRACK INSTALLATION - N.T.S.

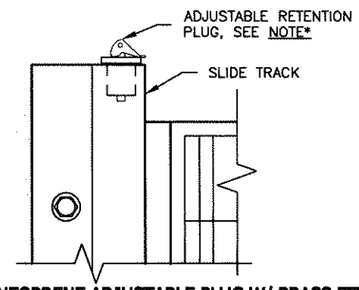

3 NEOPRENE ADJUSTABLE PLUG W/ BRASS FITTING

SLIDE TRACK INSTALLATION (STANDARD)- N.T.S.

NOTE*: ANY MECHANICAL OR POSITIVE LOCKING DEVICE MAY BE USED IN LIEU OF THE PLUG SHOWN IN THIS DETAIL AT TOP OR BOTTOM TO HOLD FABRIC INSIDE TRACK

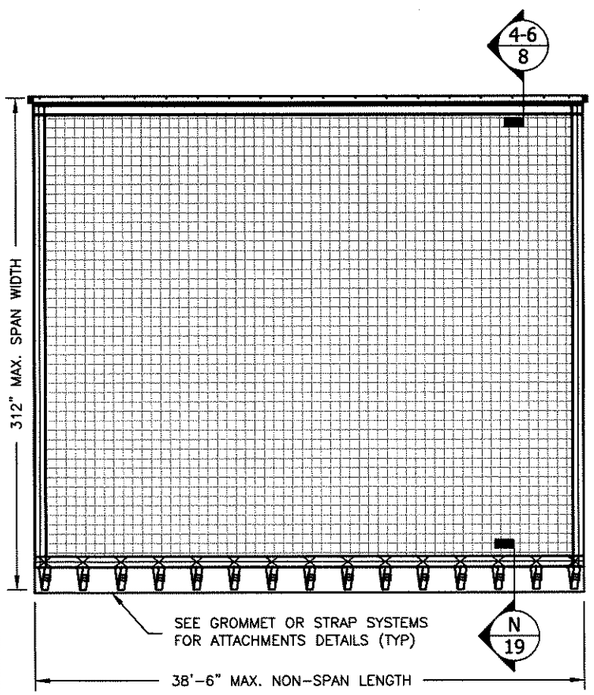

EASY SCREEN SINGLE PANEL - ELEVATION

TYPICAL 2 SIDED ATTACHMENT - VERTICAL OR HORIZONTAL INSTALLATION - N.T.S.

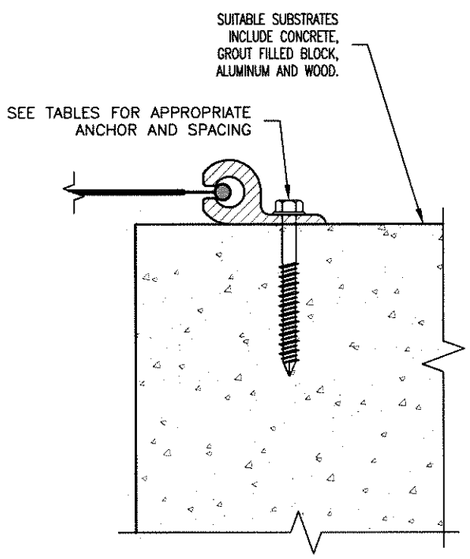

4 WALL MOUNT - SECTION

TYPICAL SLIDE TRACK INSTALLATION (OPTION 1) - N.T.S.

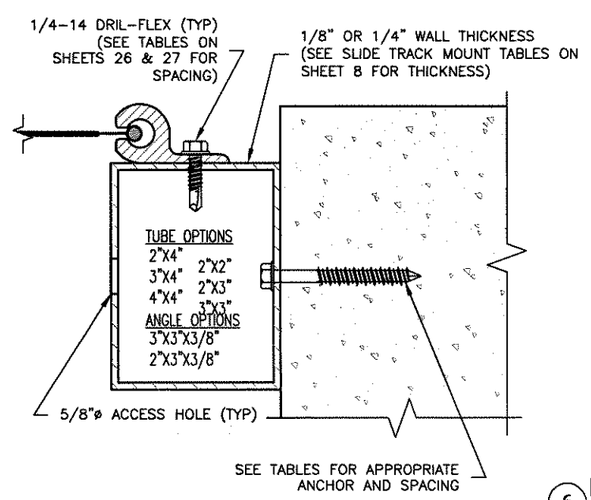

5 BUILD-IN MOUNT - SECTION

SLIDE TRACK INSTALLATION (OPTION 2) - N.T.S.

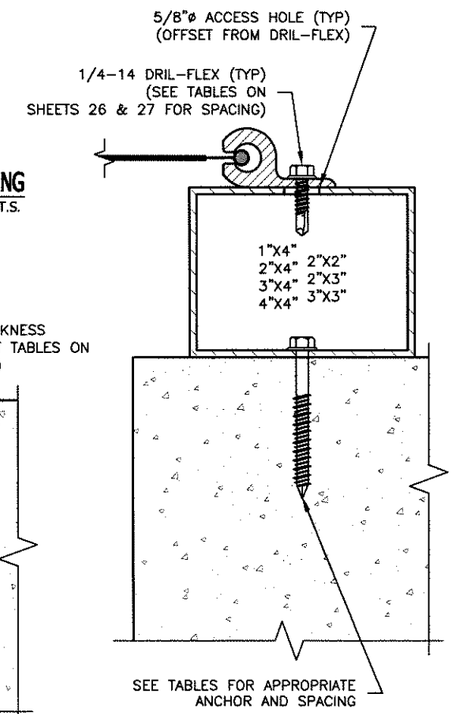

6 BUILD-OUT MOUNT - SECTION

SLIDE TRACK INSTALLATION (OPTION 3) - N.T.S.

FRANK L. BENNARDO, P.E.
PE# 0046549
LICENSE
10/20/2017
IF CHECKED, CERTIFYING P.E. APPEARS BELOW
FRANK L. BENNARDO, P.E.
46549
STATE OF FLORIDA
PROFESSIONAL ENGINEER

ENGINEERING EXPRESS®
CORPORATE OFFICE:
160 SW 12th AVE, SUITE 106
DEERFIELD BEACH, FL 33442
P: (954) 354-0660 F: (954) 354-0443
E: HELLO@ENGINEERINGEXPRESS.COM
ENGINEERINGEXPRESS.COM
CERT OF AUTH #9885

STORM SMART INDUSTRIES, INC.
6182 IDLEWILD STREET
FORT MYERS , FL
(239) 938-1000

STORM CATCHER WIND ABATEMENT SYSTEM FL11291.2 HVHZ
-
-, FL

REMARKS	DRWN	CHKD	DATE
INIT ISSUE	RWN	FLB	10/18/17

THIS DOCUMENT IS THE PROPERTY OF ENGINEERING EXPRESS, AND SHALL NOT BE REPRODUCED IN WHOLE OR PART WITHOUT WRITTEN CONSENT OF ENGINEERING EXPRESS. ALTERATIONS, ADDITIONS, OR OTHER MARKINGS TO THIS DOCUMENT ARE NOT PERMITTED AND INVALIDATE OUR CERTIFICATION.

COPYRIGHT ENGINEERING EXPRESS ®

16-3080

SCALE: NTS UNLESS NOTED

V:\Projects\16-3080 Storm Catcher Wind Abatement System FL11291-R4\WP\2017 FBC Update\16-3080e-Dwg-11291.2.dwg
10/20/2017 - 3:09pm zachr

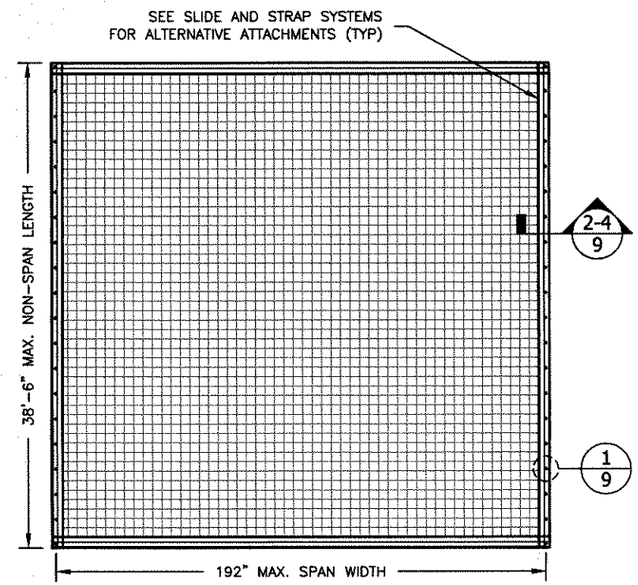

GROMMET SCREEN SINGLE PANEL - ELEVATION

TYPICAL 2 SIDED ATTACHMENT - VERTICAL OR HORIZONTAL INSTALLATION - N.T.S.

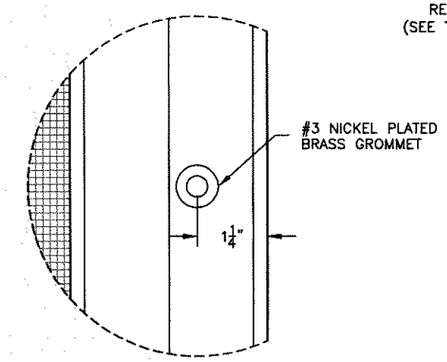

1 GROMMET - DETAIL

SCALE: 3/8":1"

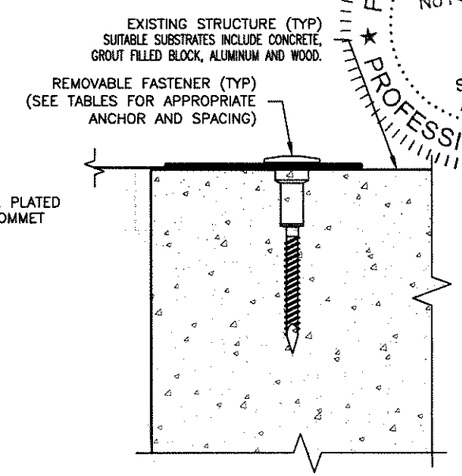

2 WALL MOUNT - SECTION

TYPICAL INSTALLATION (OPTION 1) - N.T.S.

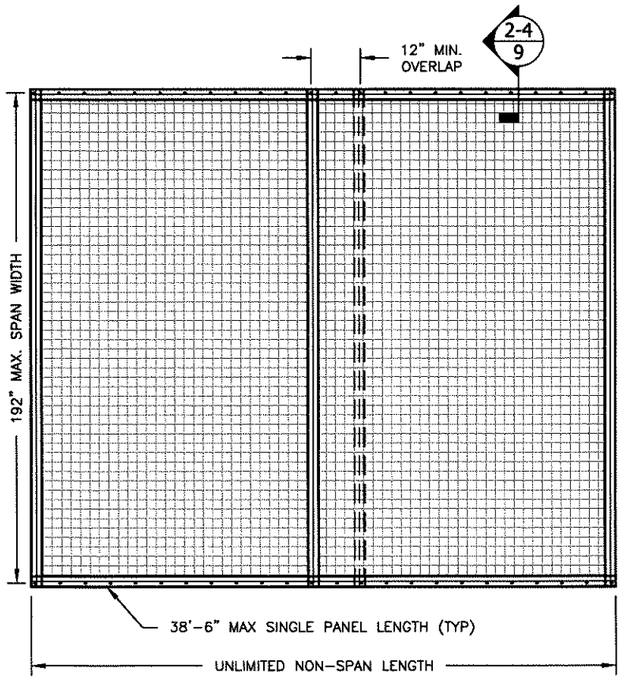

GROMMET SCREEN MULTIPLE PANEL - ELEVATION

LAPPED SCREEN - VERTICAL OR HORIZONTAL INSTALLATION - N.T.S.

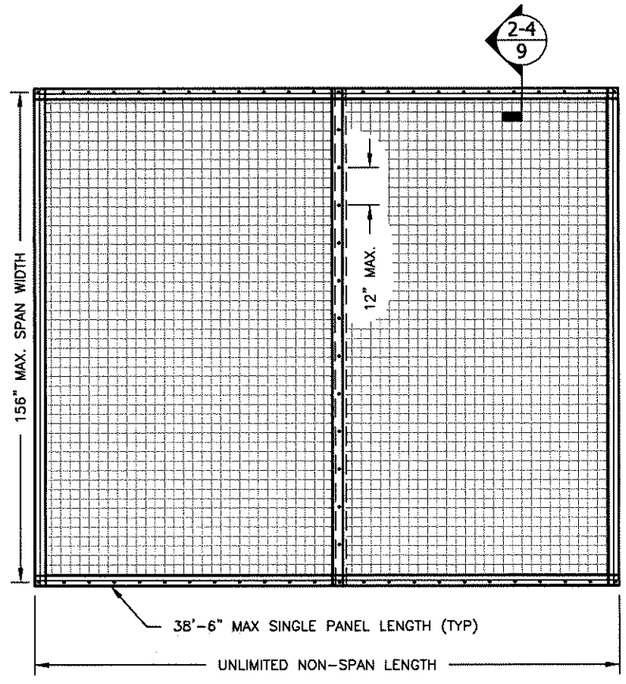

GROMMET SCREEN MULTIPLE PANEL - ELEVATION

OPTIONAL COLUMN ATTACHMENT - VERTICAL OR HORIZONTAL INSTALLATION - N.T.S.

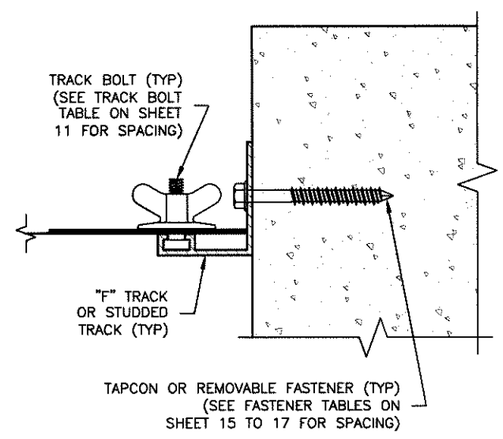

3 BUILD-IN MOUNT - SECTION

ANGLED "F" OR STUDDED INSTALLATION (OPTION 2) - N.T.S.

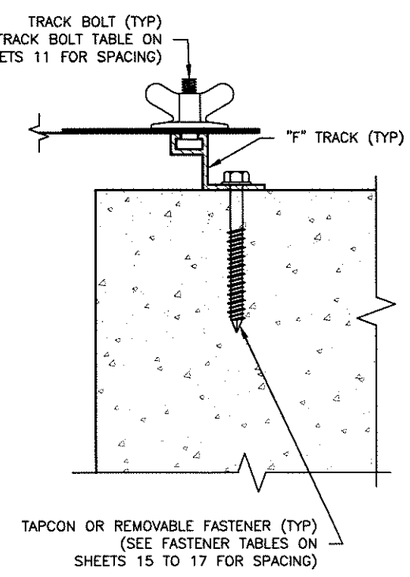

4 "F" TRACK MOUNT - SECTION

STANDARD OR BUILD-OUT INSTALLATION (OPTION 3) - N.T.S.

FRANK L. BENNARDO, P.E.
PE# 0046549
10/20/2017
IF CHECKED, CONFORMS TO ABOVE STATEMENT
FRANK L. BENNARDO, P.E.
46549

ENGINEERING EXPRESS
CORPORATE OFFICE:
160 SW 12th AVE, SUITE 100
DEERFIELD BEACH, FL 33442
P: (954) 354-0660 F: (954) 354-0443
E: HELLO@ENGINEERINGEXPRESS.COM
ENGINEERINGEXPRESS.COM
CERT OF AUTH #9885

STORM SMART INDUSTRIES, INC.
6182 IDLEWILD STREET
FORT MYERS , FL
(239) 938-1000

STORM CATCHER WIND ABATEMENT SYSTEM FL11291.2 HVHZ
-
-, FL

REMARKS	DRWN	CHKD	DATE
INIT ISSUE	RWN	FLB	10/18/17

THIS DOCUMENT IS THE PROPERTY OF ENGINEERING EXPRESS, AND SHALL NOT BE REPRODUCED IN WHOLE OR PART WITHOUT WRITTEN CONSENT OF ENGINEERING EXPRESS. ALTERATIONS, ADDITIONS, OR OTHER MARKINGS TO THIS DOCUMENT ARE NOT PERMITTED AND INVALIDATE OUR CERTIFICATION.

COPYRIGHT ENGINEERING EXPRESS ©

16-3080

SCALE: NTS UNLESS NOTED

V:\Projects\16-3080 Storm Catcher Wind Abatement System FL11291-R4\WP\2017 FBC Update\16-3080e-Dwg-11291.2.dwg zachr 10/20/2017 - 3:10pm

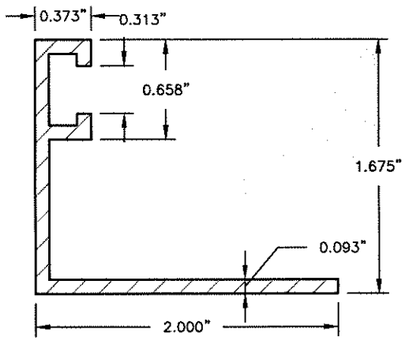

ANGLED "F" TRACK
6063-T6 ALUMINUM - SCALE: 1:1

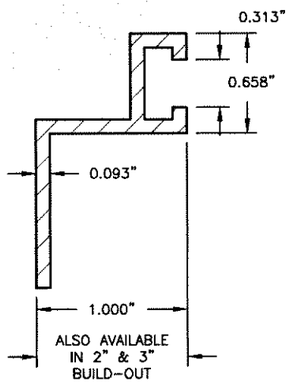

BUILD-OUT "F" TRACK
6063-T6 ALUMINUM - SCALE: 1:1

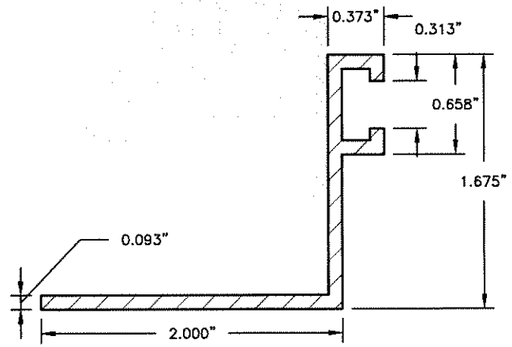

REVERSE ANGLED "F" TRACK
6063-T6 ALUMINUM - SCALE: 1:1

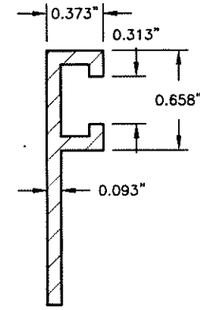

STANDARD "F" TRACK
6063-T6 ALUMINUM - SCALE: 1:1

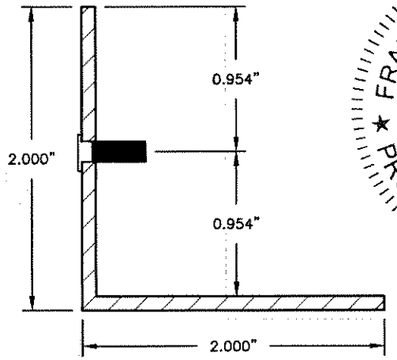

STUDDED ANGLED TRACK
6063-T6 ALUMINUM - SCALE: 1:1

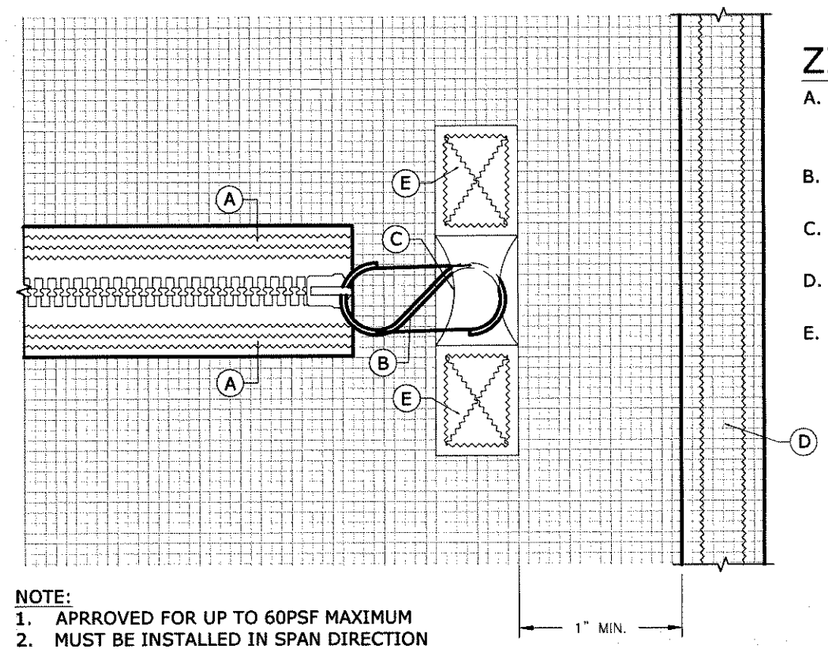

ZIPPER KEYNOTES

A. (3) ROWS STITCHING EACH SIDE OF ZIPPER (THREAD: 138 DENIER POLYESTER)

B. ANY SPRING CLIP W/ MINIMUM RATING OF 50 LBS. W.L.

C. 2" WIDE SEAT BELT WEBBING WITH LOOP

D. STRUCTURAL EDGE HEM. VARIES BY PANEL, SEE SHEET 1.

E. 2" WIDE SEAT BELT WEBBING W/ BOX STITCH

NOTE:
1. APRROVED FOR UP TO 60PSF MAXIMUM
2. MUST BE INSTALLED IN SPAN DIRECTION
3. SHALL NOT PENETRATE HEMS

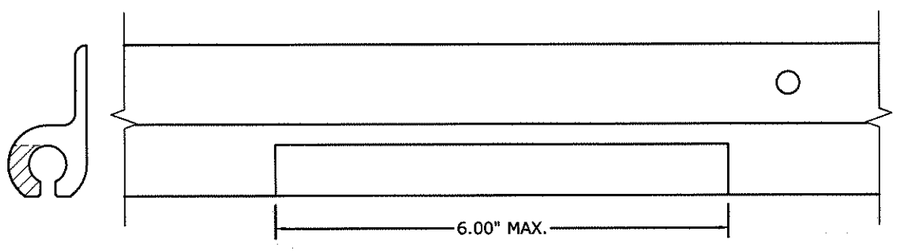

SLIDE TRACK SLOT DETAIL
6063-T6 ALUMINUM - SCALE: 1:2

FRANK L. BENNARDO, P.E.
PE#:0046549
10/20/2017
IF DIGITAL CERTIFICATE ABOVE
FRANK L. BENNARDO, P.E.
46549

FRANK L. BENNARDO
LICENSE
No PE0046549
STATE OF FLORIDA
PROFESSIONAL ENGINEER

ENGINEERING EXPRESS®
CORPORATE OFFICE:
160 SW 12th AVE, SUITE 106
DEERFIELD BEACH, FL 33442
P: (954) 354-0660 F: (954) 354-0443
E: HELLO@ENGINEERINGEXPRESS.COM
ENGINEERINGEXPRESS.COM
CERT OF AUTH #9885

STORM SMART INDUSTRIES, INC.
6182 IDLEWILD STREET
FORT MYERS , FL
(239) 938-1000

STORM CATCHER WIND ABATEMENT SYSTEM FL11291.2 HVHZ
-
-, FL

REMARKS	DRWN	CHKD	DATE
INIT ISSUE	RWN	FLB	10/18/17

THIS DOCUMENT IS THE PROPERTY OF ENGINEERING EXPRESS, AND SHALL NOT BE REPRODUCED IN WHOLE OR PART WITHOUT WRITTEN CONSENT OF ENGINEERING EXPRESS. ALTERATIONS, ADDITIONS, OR OTHER MARKINGS TO THIS DOCUMENT ARE NOT PERMITTED AND INVALIDATE OUR CERTIFICATION.

COPYRIGHT ENGINEERING EXPRESS ©

16-3080

SCALE: NTS UNLESS NOTED

10/20/2017 - 3:07pm zachr V:\Projects\16-3080 Storm Catcher Wind Abatement System FL11291-R4\WP\2017 FBC Update\16-3080e-Dwg-11291.2.dwg

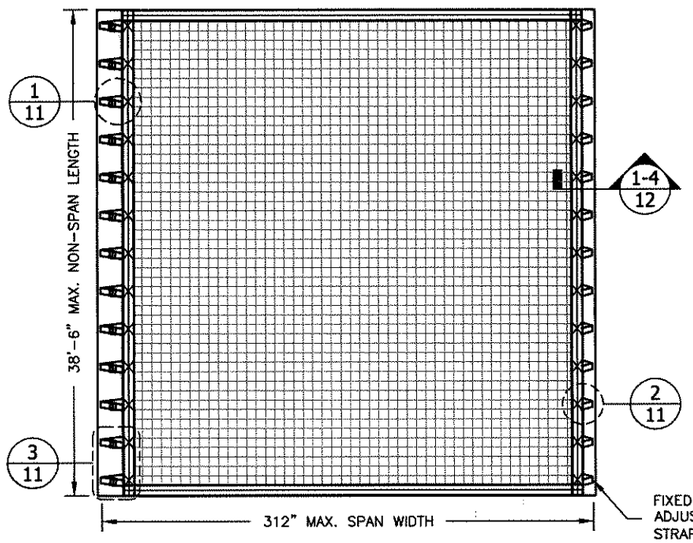

STRAP SCREEN SINGLE PANEL - ELEVATION

TYPICAL 2 SIDED ATTACHMENT - VERTICAL OR HORIZONTAL INSTALLATION - N.T.S.

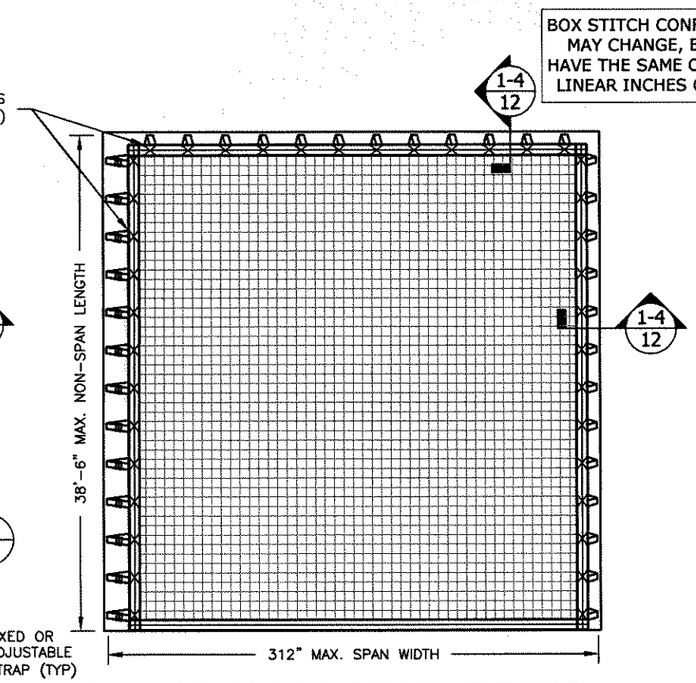

BOX STITCH CONFIGURATION MAY CHANGE, BUT MUST HAVE THE SAME OR GREATER LINEAR INCHES OF STITCH.

STRAP SCREEN SINGLE PANEL - ELEVATION

3 OR 4 SIDED ATTACHMENT - VERTICAL OR HORIZONTAL INSTALLATION - SCALE N.T.S.

NOTE: FOR 4 SIDED ATTACHMENT THE SPAN IS IN THE SHORT DIMENSION BEWTEEN FASTENERS.

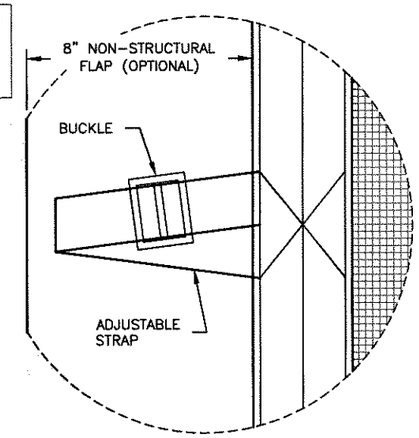

1 ADJUSTABLE STRAP - DETAIL

NON-STRUCTURAL FLAP (OPTIONAL) - N.T.S.

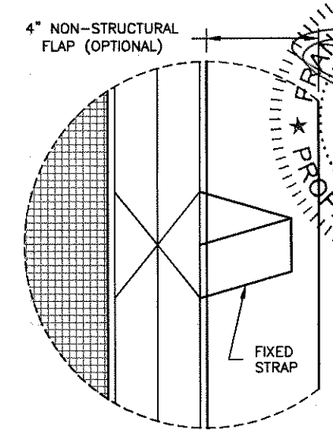

2 FIXED STRAP - DETAIL

NON-STRUCTURAL FLAP (OPTIONAL) - N.T.S.

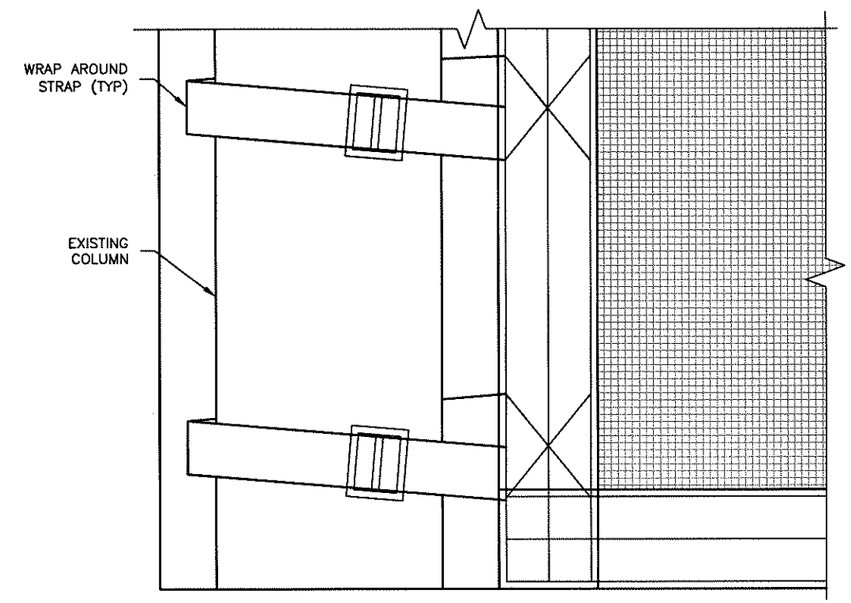

3 COLUMN MOUNT - DETAIL

COLUMN STRAP ATTACHMENT (OPTIONAL) - N.T.S.

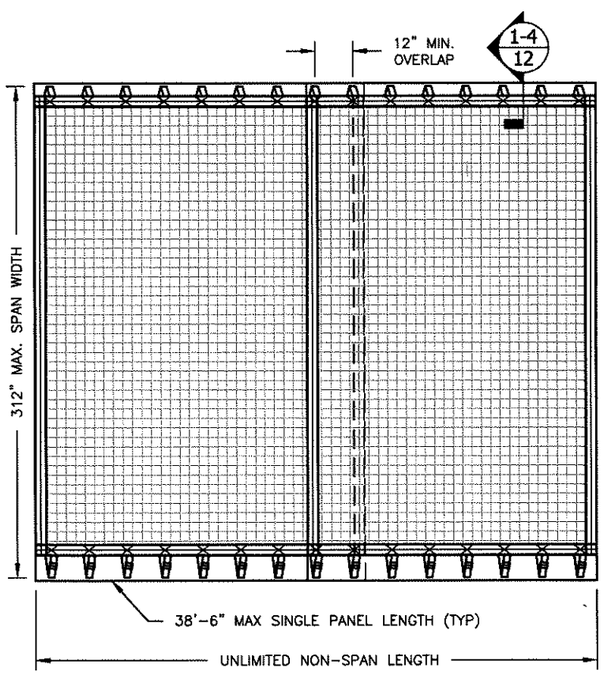

STRAP SCREEN MULTIPLE PANEL - ELEVATION

LAPPED SCREEN - VERTICAL OR HORIZONTAL INSTALLATION - N.T.S.

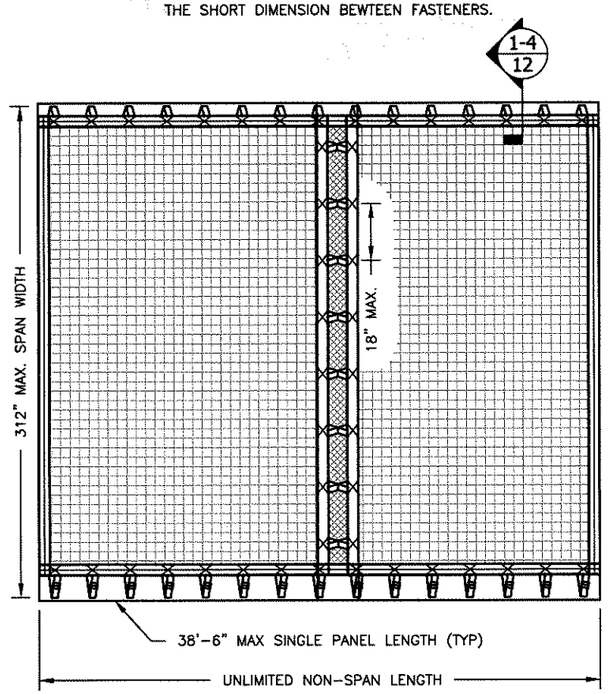

STRAP SCREEN MULTIPLE PANEL - ELEVATION

OPTIONAL COLUMN ATTACHMENT - VERTICAL OR HORIZONTAL INSTALLATION - N.T.S.

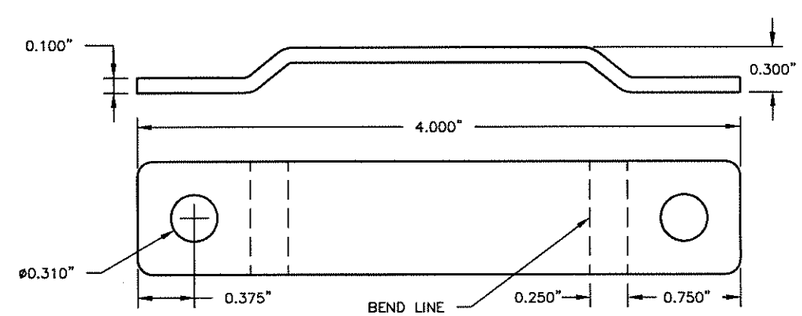

STRAP BRACKET

304 STAINLESS STEEL - SCALE: 1:1

FRANK L. BENNARDO, P.E.
PE# 0046549
LICENSE
10/20/2017
IF CHECKED, CERTIFICATES AREAS BELOW
FRANK L. BENNARDO, P.E.
46549
STATE OF FLORIDA
PROFESSIONAL ENGINEER

ENGINEERING EXPRESS
CORPORATE OFFICE:
160 SW 12th AVE, SUITE 106
DEERFIELD BEACH, FL 33441
P: (954) 354-0660 F: (954) 354-0443
E: HELLO@ENGINEERINGEXPRESS.COM
ENGINEERINGEXPRESS.COM
CERT OF AUTH #9885

STORM SMART INDUSTRIES, INC.
6182 IDLEWILD STREET
FORT MYERS , FL
(239) 938-1000

STORM CATCHER WIND ABATEMENT SYSTEM FL11291.2 HVHZ
-
-, FL

REMARKS	DRWN	CHK'D	DATE
INIT ISSUE	RWN	FLB	10/18/17

THIS DOCUMENT IS THE PROPERTY OF ENGINEERING EXPRESS, AND SHALL NOT BE REPRODUCED IN WHOLE OR PART WITHOUT WRITTEN CONSENT OF ENGINEERING EXPRESS. ALTERATIONS, ADDITIONS, OR OTHER MARKINGS TO THIS DOCUMENT ARE NOT PERMITTED AND INVALIDATE OUR CERTIFICATION.

COPYRIGHT ENGINEERING EXPRESS ®

16-3080

SCALE: NTS UNLESS NOTED

V:\Projects\16-3080 Storm Catcher Wind Abatement System FL11291-R4\WP\2017 FBC Update\16-3080e-Dwg-11291.2.dwg
zachr
10/20/2017 - 3:07pm

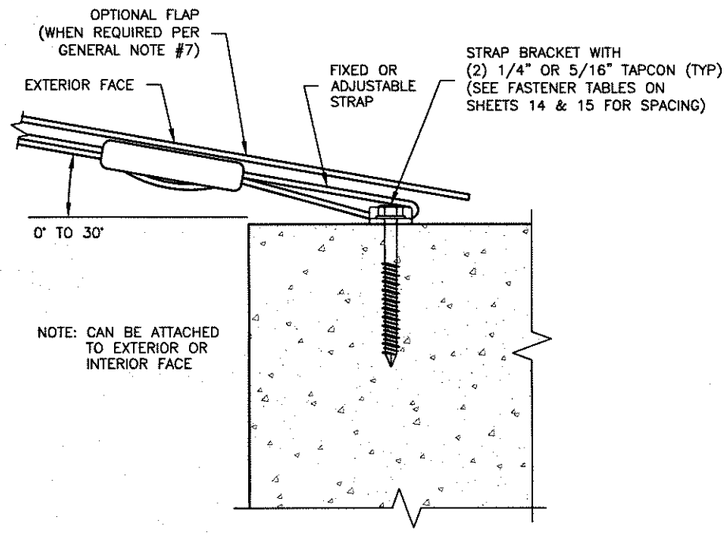

1 OUTSIDE MOUNT - SECTION
STRAP BRACKET INSTALLATION (OPTION 1) - N.T.S.

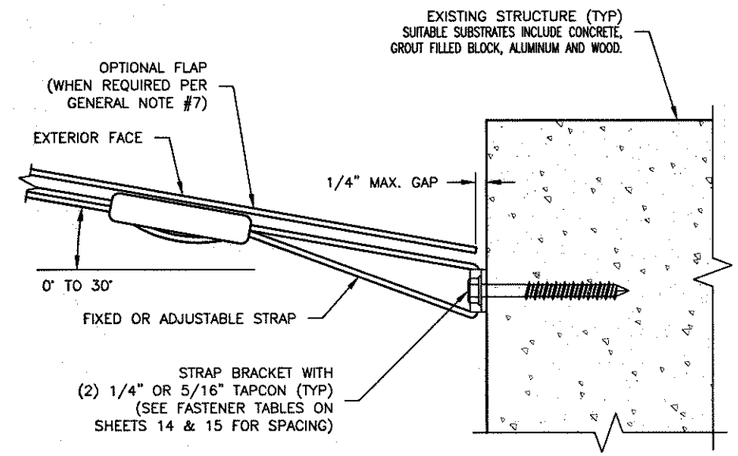

2 INSIDE MOUNT - SECTION
STRAP BRACKET INSTALLATION (OPTION 2) - N.T.S.

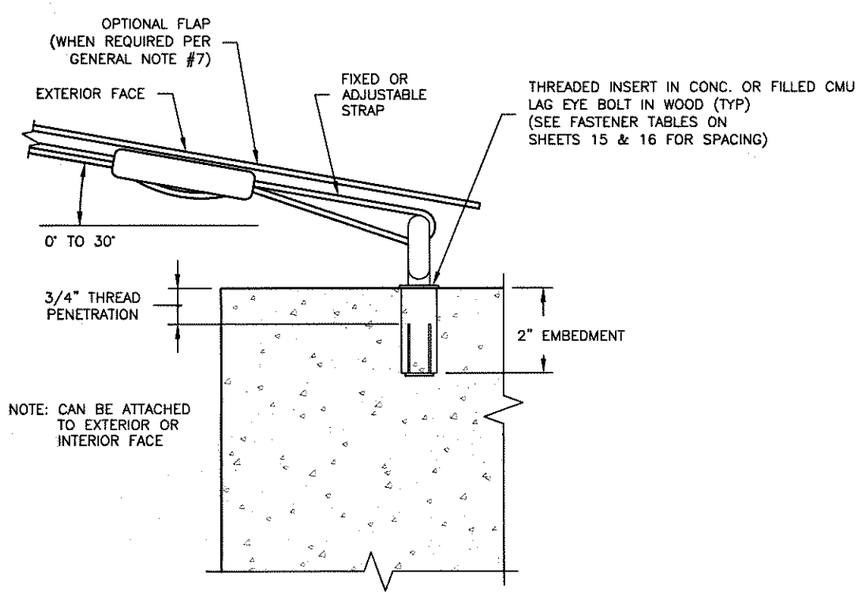

3 OUTSIDE MOUNT - SECTION
EYE BOLT INSTALLATION (OPTION 3) - N.T.S.

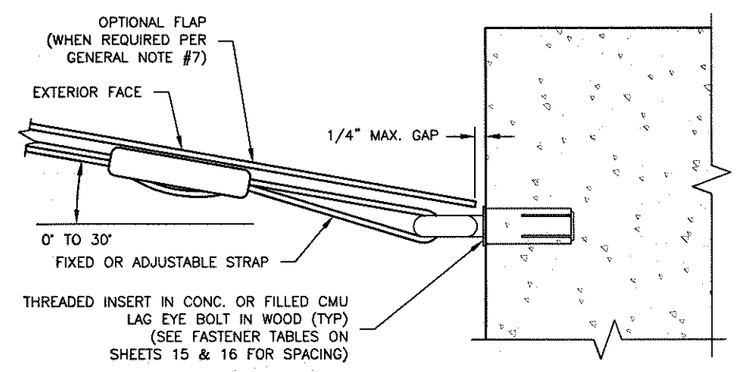

4 INSIDE MOUNT - SECTION
EYE BOLT INSTALLATION (OPTION 4) - N.T.S.

FRANK L. BENNARDO, P.E.
PE# 0046549
10/20/2017
IF ENCLOSED, CERTIFYING P.E. APPEARS BELOW
FRANK L. BENNARDO, P.E.
46549

FRANK L. BENNARDO LICENSE No PE0046549 STATE OF FLORIDA PROFESSIONAL ENGINEER

ENGINEERING EXPRESS®
CORPORATE OFFICE:
160 SW 12th AVE, SUITE 106
DEERFIELD BEACH, FL 33442
P: (954) 354-0660 F: (954) 354-0443
E: HELLO@ENGINEERINGEXPRESS.COM
ENGINEERINGEXPRESS.COM
CERT OF AUTH #9885

STORM SMART INDUSTRIES, INC.
6182 IDLEWILD STREET
FORT MYERS , FL
(239) 938-1000

STORM CATCHER WIND ABATEMENT SYSTEM FL11291.2 HVHZ
-
-, FL

REMARKS	DRWN	CHKD	DATE
INIT ISSUE	RWN	FLB	10/18/17

THIS DOCUMENT IS THE PROPERTY OF ENGINEERING EXPRESS, AND SHALL NOT BE REPRODUCED IN WHOLE OR PART WITHOUT WRITTEN CONSENT OF ENGINEERING EXPRESS. ALTERATIONS, ADDITIONS, OR OTHER MARKINGS TO THIS DOCUMENT ARE NOT PERMITTED AND INVALIDATE OUR CERTIFICATION.

COPYRIGHT ENGINEERING EXPRESS ®

16-3080

SCALE: NTS UNLESS NOTED

10/20/2017 - 3:07pm zachr V:\Projects\16-3080 Storm Catcher Wind Abatement System FL11291-R4\WP\2017 FBC Update\16-3080e-Dwg-11291.2.dwg

$\frac{1}{4}$" & $\frac{5}{16}$" ELCO ULTRACON HFH

TABLE 4 - CONCRETE

HOST STRUCT.: CONCRETE

3 1/8" MIN EDGE DISTANCE

ANCHOR TYPE	LOAD (psf)	SPANS 0' ≤ 3'	SPANS 3' ≤ 3'-6"	SPANS 3'-7" ≤ 4'	SPANS 4' ≤ 4'-6"	SPANS 4'-7" ≤ 5'	SPANS 5' ≤ 5'-6"	SPANS 5'-7" ≤ 6'	SPANS 6' ≤ 6'-6"	SPANS 6'-7" ≤ 7'	SPANS 7' ≤ 7'-6"	SPANS 7'-7" ≤ 8'	SPANS 8' ≤ 8'-6"	SPANS 8'-7" ≤ 9'	SPANS 9' ≤ 9'-6"	SPANS 9'-7" ≤ 10'	SPANS 10' ≤ 10'-6"	SPANS 10'-7" ≤ 11'	SPANS 11' ≤ 11'-6"	SPANS 11'-7" ≤ 12'	SPANS 12' ≤ 12'-6"	SPANS 12'-7" ≤ 13'	SPANS 13' ≤ 13'-6"	SPANS 13'-7" ≤ 14'	SPANS 14' ≤ 14'-6"	SPANS 14'-7" ≤ 15'	SPANS 15' ≤ 15'-6"	SPANS 15'-7" ≤ 16'
5/16" ELCO ULTRACON HFH 2" EMBEDMENT (3500 PSI CONC)	30	12.0"	12.0"	12.0"	12.0"	12.0"	12.0"	12.0"	12.0"	12.0"	12.0"	12.0"	12.0"	12.0"	12.0"	12.0"	12.0"	12.0"	12.0"	12.0"	12.0"	12.0"	12.0"	12.0"	12.0"	12.0"	12.0"	11.0"
	35	12.0"	12.0"	12.0"	12.0"	12.0"	12.0"	12.0"	12.0"	12.0"	12.0"	12.0"	12.0"	12.0"	12.0"	12.0"	12.0"	12.0"	12.0"	12.0"	12.0"	12.0"	12.0"	11.0"	11.0"	11.0"	10.0"	10.0"
	40	12.0"	12.0"	12.0"	12.0"	12.0"	12.0"	12.0"	12.0"	12.0"	12.0"	12.0"	12.0"	12.0"	12.0"	12.0"	12.0"	12.0"	12.0"	11.0"	11.0"	11.0"	11.0"	10.0"	10.0"	10.0"	9.0"	9.0"
	45	12.0"	12.0"	12.0"	12.0"	12.0"	12.0"	12.0"	12.0"	12.0"	12.0"	12.0"	12.0"	12.0"	12.0"	12.0"	12.0"	11.0"	11.0"	11.0"	10.0"	10.0"	10.0"	9.0"	9.0"	9.0"	9.0"	8.0"
	50	12.0"	12.0"	12.0"	12.0"	12.0"	12.0"	12.0"	12.0"	12.0"	12.0"	12.0"	12.0"	12.0"	12.0"	11.0"	11.0"	10.0"	10.0"	10.0"	9.0"	9.0"	9.0"	9.0"	8.0"	8.0"	8.0"	8.0"
	55	12.0"	12.0"	12.0"	12.0"	12.0"	12.0"	12.0"	12.0"	12.0"	12.0"	12.0"	12.0"	11.0"	11.0"	10.0"	10.0"	10.0"	9.0"	9.0"	9.0"	9.0"	8.0"	8.0"	8.0"	8.0"	7.0"	7.0"
	60	12.0"	12.0"	12.0"	12.0"	12.0"	12.0"	12.0"	12.0"	12.0"	12.0"	11.0"	11.0"	11.0"	10.0"	10.0"	10.0"	9.0"	9.0"	9.0"	8.0"	8.0"	8.0"	8.0"	7.0"	7.0"	7.0"	7.0"
	65	12.0"	12.0"	12.0"	12.0"	12.0"	12.0"	12.0"	12.0"	12.0"	11.0"	11.0"	10.0"	10.0"	10.0"	9.0"	9.0"	9.0"	8.0"	8.0"	8.0"	8.0"	7.0"	7.0"	7.0"	7.0"	7.0"	6.0"
	70	12.0"	12.0"	12.0"	12.0"	12.0"	12.0"	12.0"	12.0"	11.0"	11.0"	10.0"	10.0"	9.0"	9.0"	9.0"	8.0"	8.0"	8.0"	8.0"	7.0"	7.0"	7.0"	7.0"	7.0"	6.0"	6.0"	6.0"
	75	12.0"	12.0"	12.0"	12.0"	12.0"	12.0"	12.0"	11.0"	11.0"	10.0"	10.0"	9.0"	9.0"	9.0"	8.0"	8.0"	8.0"	7.0"	7.0"	7.0"	7.0"	7.0"	6.0"	6.0"	6.0"	6.0"	6.0"
	80	12.0"	12.0"	12.0"	12.0"	12.0"	12.0"	11.0"	11.0"	10.0"	10.0"	9.0"	9.0"	8.0"	8.0"	8.0"	8.0"	7.0"	7.0"	7.0"	7.0"	6.0"	6.0"	6.0"	6.0"	6.0"	6.0"	5.0"
	85	12.0"	12.0"	12.0"	12.0"	12.0"	12.0"	11.0"	10.0"	10.0"	9.0"	9.0"	8.0"	8.0"	8.0"	7.0"	7.0"	7.0"	7.0"	6.0"	6.0"	6.0"	6.0"	6.0"	6.0"	5.0"	5.0"	5.0"
	90	12.0"	12.0"	12.0"	12.0"	12.0"	11.0"	11.0"	10.0"	9.0"	9.0"	8.0"	8.0"	8.0"	7.0"	7.0"	7.0"	7.0"	6.0"	6.0"	6.0"	6.0"	6.0"	5.0"	5.0"	5.0"	5.0"	5.0"
	95	12.0"	12.0"	12.0"	12.0"	12.0"	11.0"	10.0"	10.0"	9.0"	9.0"	8.0"	8.0"	7.0"	7.0"	7.0"	7.0"	6.0"	6.0"	6.0"	6.0"	6.0"	5.0"	5.0"	5.0"	5.0"	5.0"	5.0"
	100	12.0"	12.0"	12.0"	12.0"	11.0"	10.0"	10.0"	9.0"	9.0"	8.0"	8.0"	7.0"	7.0"	7.0"	7.0"	6.0"	6.0"	6.0"	6.0"	6.0"	5.0"	5.0"	5.0"	5.0"	5.0"	5.0"	5.0"
	105	12.0"	12.0"	12.0"	12.0"	11.0"	10.0"	9.0"	9.0"	8.0"	8.0"	8.0"	7.0"	7.0"	7.0"	6.0"	6.0"	6.0"	6.0"	5.0"	5.0"	5.0"	5.0"	5.0"	5.0"	5.0"		
	110	12.0"	12.0"	12.0"	11.0"	10.0"	10.0"	9.0"	9.0"	8.0"	8.0"	7.0"	7.0"	7.0"	6.0"	6.0"	6.0"	6.0"	5.0"	5.0"	5.0"	5.0"	5.0"	5.0"	5.0"			
	115	12.0"	12.0"	12.0"	11.0"	10.0"	9.0"	9.0"	8.0"	8.0"	7.0"	7.0"	7.0"	6.0"	6.0"	6.0"	6.0"	6.0"	5.0"	5.0"	5.0"	5.0"	5.0"	5.0"	5.0"			
	120	12.0"	12.0"	11.0"	11.0"	10.0"	9.0"	8.0"	8.0"	8.0"	7.0"	7.0"	6.0"	6.0"	6.0"	6.0"	5.0"	5.0"	5.0"	5.0"	5.0"	5.0"						
	125	12.0"	12.0"	11.0"	10.0"	9.0"	9.0"	8.0"	8.0"	7.0"	7.0"	7.0"	6.0"	6.0"	6.0"	6.0"	5.0"	5.0"	5.0"	5.0"	5.0"							
	130	12.0"	12.0"	11.0"	10.0"	9.0"	9.0"	8.0"	8.0"	7.0"	7.0"	7.0"	6.0"	6.0"	6.0"	6.0"	5.0"	5.0"	5.0"	5.0"	5.0"							

2 1/2" MIN EDGE DISTANCE

ANCHOR TYPE	LOAD (psf)	SPANS 0' ≤ 3'	SPANS 3' ≤ 3'-6"	SPANS 3'-7" ≤ 4'	SPANS 4' ≤ 4'-6"	SPANS 4'-7" ≤ 5'	SPANS 5' ≤ 5'-6"	SPANS 5'-7" ≤ 6'	SPANS 6' ≤ 6'-6"	SPANS 6'-7" ≤ 7'	SPANS 7' ≤ 7'-6"	SPANS 7'-7" ≤ 8'	SPANS 8' ≤ 8'-6"	SPANS 8'-7" ≤ 9'	SPANS 9' ≤ 9'-6"	SPANS 9'-7" ≤ 10'	SPANS 10' ≤ 10'-6"	SPANS 10'-7" ≤ 11'	SPANS 11' ≤ 11'-6"	SPANS 11'-7" ≤ 12'	SPANS 12' ≤ 12'-6"	SPANS 12'-7" ≤ 13'	SPANS 13' ≤ 13'-6"	SPANS 13'-7" ≤ 14'	SPANS 14' ≤ 14'-6"	SPANS 14'-7" ≤ 15'	SPANS 15' ≤ 15'-6"	SPANS 15'-7" ≤ 16'
1/4" ELCO ULTRACON HFH 1-3/4" EMBEDMENT (3000 PSI CONC)	30	12.0"	12.0"	12.0"	12.0"	12.0"	12.0"	12.0"	11.0"	11.0"	10.0"	10.0"	9.0"	9.0"	9.0"	8.0"	8.0"	8.0"	7.0"	7.0"	7.0"	7.0"	7.0"	6.0"	6.0"	6.0"	6.0"	6.0"
	35	12.0"	12.0"	12.0"	12.0"	12.0"	11.0"	11.0"	10.0"	10.0"	9.0"	9.0"	8.0"	8.0"	8.0"	7.0"	7.0"	7.0"	7.0"	6.0"	6.0"	6.0"	6.0"	6.0"	6.0"	5.0"	5.0"	5.0"
	40	12.0"	12.0"	12.0"	12.0"	11.0"	10.0"	10.0"	9.0"	9.0"	8.0"	8.0"	8.0"	7.0"	7.0"	7.0"	6.0"	6.0"	6.0"	6.0"	5.0"	5.0"	5.0"	5.0"	5.0"	5.0"	5.0"	5.0"
	45	12.0"	12.0"	12.0"	11.0"	10.0"	10.0"	9.0"	8.0"	8.0"	8.0"	7.0"	7.0"	7.0"	6.0"	6.0"	6.0"	6.0"	6.0"	5.0"	5.0"	5.0"	5.0"	5.0"	5.0"	4.0"	4.0"	4.0"
	50	12.0"	12.0"	11.0"	10.0"	9.0"	9.0"	8.0"	8.0"	7.0"	7.0"	7.0"	6.0"	6.0"	6.0"	6.0"	5.0"	5.0"	5.0"	5.0"	5.0"	5.0"	4.0"	4.0"	4.0"	4.0"	4.0"	4.0"
	55	12.0"	11.0"	10.0"	10.0"	9.0"	8.0"	8.0"	7.0"	7.0"	7.0"	6.0"	6.0"	6.0"	5.0"	5.0"	5.0"	5.0"	5.0"	5.0"	4.0"	4.0"	4.0"	4.0"	4.0"	4.0"	4.0"	4.0"
	60	12.0"	11.0"	10.0"	9.0"	8.0"	8.0"	7.0"	7.0"	6.0"	6.0"	6.0"	6.0"	5.0"	5.0"	5.0"	5.0"	5.0"	5.0"	4.0"	4.0"	4.0"	4.0"	4.0"	4.0"	4.0"		
	65	11.0"	10.0"	9.0"	8.0"	8.0"	7.0"	7.0"	6.0"	6.0"	6.0"	5.0"	5.0"	5.0"	5.0"	5.0"	4.0"	4.0"	4.0"	4.0"	4.0"	4.0"	4.0"	4.0"				
	70	11.0"	10.0"	9.0"	8.0"	7.0"	7.0"	6.0"	6.0"	6.0"	5.0"	5.0"	5.0"	5.0"	5.0"	4.0"	4.0"	4.0"	4.0"	4.0"	4.0"	4.0"						
	75	10.0"	9.0"	8.0"	8.0"	7.0"	7.0"	6.0"	6.0"	5.0"	5.0"	5.0"	5.0"	4.0"	4.0"	4.0"	4.0"	4.0"	4.0"	4.0"								
	80	10.0"	9.0"	8.0"	7.0"	7.0"	6.0"	6.0"	5.0"	5.0"	5.0"	5.0"	4.0"	4.0"	4.0"	4.0"	4.0"	4.0"	4.0"									
	85	9.0"	8.0"	8.0"	7.0"	6.0"	6.0"	6.0"	5.0"	5.0"	5.0"	4.0"	4.0"	4.0"	4.0"	4.0"	4.0"	4.0"										
	90	9.0"	8.0"	7.0"	7.0"	6.0"	6.0"	5.0"	5.0"	5.0"	4.0"	4.0"	4.0"	4.0"	4.0"	4.0"												
	95	9.0"	8.0"	7.0"	6.0"	6.0"	5.0"	5.0"	5.0"	5.0"	4.0"	4.0"	4.0"	4.0"	4.0"													
	100	8.0"	7.0"	7.0"	6.0"	6.0"	5.0"	5.0"	5.0"	4.0"	4.0"	4.0"	4.0"	4.0"														
	105	8.0"	7.0"	6.0"	6.0"	5.0"	5.0"	5.0"	4.0"	4.0"	4.0"	4.0"	4.0"															
	110	8.0"	7.0"	6.0"	6.0"	5.0"	5.0"	5.0"	4.0"	4.0"	4.0"	4.0"																
	115	7.0"	7.0"	6.0"	6.0"	5.0"	5.0"	4.0"	4.0"	4.0"	4.0"																	
	120	7.0"	6.0"	6.0"	5.0"	5.0"	5.0"	4.0"	4.0"	4.0"	4.0"																	
	125	7.0"	6.0"	6.0"	5.0"	5.0"	4.0"	4.0"	4.0"	4.0"																		
	130	7.0"	6.0"	5.0"	5.0"	5.0"	4.0"	4.0"	4.0"	4.0"																		

HOST STRUCT.: CONCRETE

3 1/8" MIN EDGE DISTANCE

ANCHOR TYPE	LOAD (psf)	SPANS 16' ≤ 16'-6"	SPANS 16'-7" ≤ 17'	SPANS 17' ≤ 17'-6"	SPANS 17'-7" ≤ 18'	SPANS 18' ≤ 18'-6"	SPANS 18'-7" ≤ 19'	SPANS 19' ≤ 19'-6"	SPANS 19'-7" ≤ 20'	SPANS 20' ≤ 20'-6"	SPANS 20'-7" ≤ 21'	SPANS 21' ≤ 21'-6"	SPANS 21'-7" ≤ 22'	SPANS 22' ≤ 22'-6"	SPANS 22'-7" ≤ 23'	SPANS 23' ≤ 23'-6"	SPANS 23'-7" ≤ 24'	SPANS 24' ≤ 24'-6"	SPANS 24'-7" ≤ 25'	SPANS 25' ≤ 25'-6"	SPANS 25'-7" ≤ 26'	SPANS 26' ≤ 26'-6"	SPANS 26'-7" ≤ 27'	SPANS 27' ≤ 27'-6"	SPANS 27'-7" ≤ 28'	SPANS 28' ≤ 28'-6"	SPANS 28'-7" ≤ 29'	SPANS 29' ≤ 29'-6"	SPANS 29'-7" ≤ 30'
5/16" ELCO ULTRACON HFH 2" EMBEDMENT (3500 PSI CONC)	30	11.0"	11.0"	11.0"	11.0"	10.0"	10.0"	10.0"	10.0"	10.0"	9.0"	9.0"	9.0"	9.0"	9.0"	9.0"	8.0"	8.0"	8.0"	8.0"	8.0"	8.0"	8.0"	8.0"	8.0"	8.0"	8.0"	8.0"
	35	10.0"	10.0"	10.0"	9.0"	9.0"	9.0"	9.0"	9.0"	8.0"	8.0"	8.0"	8.0"	8.0"	8.0"	8.0"	8.0"	7.0"	7.0"	7.0"	7.0"	7.0"	7.0"	7.0"	7.0"	7.0"	7.0"	7.0"
	40	9.0"	9.0"	9.0"	8.0"	8.0"	8.0"	8.0"	8.0"	8.0"	8.0"	7.0"	7.0"	7.0"	7.0"	7.0"	7.0"	7.0"	7.0"	7.0"	6.0"	6.0"	6.0"	6.0"	6.0"	6.0"	6.0"	6.0"
	45	8.0"	8.0"	8.0"	8.0"	8.0"	7.0"	7.0"	7.0"	7.0"	7.0"	7.0"	7.0"	7.0"	6.0"	6.0"	6.0"	6.0"	6.0"	6.0"	6.0"	6.0"	6.0"	6.0"	6.0"	6.0"	6.0"	6.0"
	50	8.0"	7.0"	7.0"	7.0"	7.0"	7.0"	7.0"	7.0"	6.0"	6.0"	6.0"	6.0"	6.0"	6.0"	6.0"	6.0"	6.0"	6.0"	5.0"	5.0"	5.0"	5.0"	5.0"	5.0"	5.0"	5.0"	5.0"
	55	7.0"	7.0"	7.0"	7.0"	6.0"	6.0"	6.0"	6.0"	6.0"	6.0"	6.0"	6.0"	6.0"	5.0"	5.0"	5.0"	5.0"	5.0"	5.0"	5.0"	5.0"	5.0"	5.0"	5.0"	5.0"	5.0"	5.0"
	60	7.0"	6.0"	6.0"	6.0"	6.0"	6.0"	6.0"	6.0"	6.0"	5.0"	5.0"	5.0"	5.0"	5.0"	5.0"	5.0"	5.0"	5.0"	5.0"	5.0"	5.0"	5.0"	5.0"	N/A	N/A	N/A	N/A

2 1/2" MIN EDGE DISTANCE

ANCHOR TYPE	LOAD (psf)	SPANS 16' ≤ 16'-6"	SPANS 16'-7" ≤ 17'	SPANS 17' ≤ 17'-6"	SPANS 17'-7" ≤ 18'	SPANS 18' ≤ 18'-6"	SPANS 18'-7" ≤ 19'	SPANS 19' ≤ 19'-6"	SPANS 19'-7" ≤ 20'	SPANS 20' ≤ 20'-6"	SPANS 20'-7" ≤ 21'	SPANS 21' ≤ 21'-6"	SPANS 21'-7" ≤ 22'	SPANS 22' ≤ 22'-6"	SPANS 22'-7" ≤ 23'	SPANS 23' ≤ 23'-6"	SPANS 23'-7" ≤ 24'	SPANS 24' ≤ 24'-6"	SPANS 24'-7" ≤ 25'	SPANS 25' ≤ 25'-6"	SPANS 25'-7" ≤ 26'	SPANS 26' ≤ 26'-6"	SPANS 26'-7" ≤ 27'	SPANS 27' ≤ 27'-6"	SPANS 27'-7" ≤ 28'	SPANS 28' ≤ 28'-6"	SPANS 28'-7" ≤ 29'	SPANS 29' ≤ 29'-6"	SPANS 29'-7" ≤ 30'
1/4" ELCO ULTRACON HFH 1-3/4" EMBEDMENT (3000 PSI CONC)	30	6.0"	6.0"	5.0"	5.0"	5.0"	5.0"	5.0"	5.0"	5.0"	5.0"	5.0"	5.0"	4.0"	4.0"	4.0"	4.0"	4.0"	4.0"	4.0"	4.0"	4.0"	4.0"	4.0"	4.0"	4.0"	4.0"	4.0"
	35	5.0"	5.0"	5.0"	5.0"	5.0"	5.0"	4.0"	4.0"	4.0"	4.0"	4.0"	4.0"	4.0"	4.0"	4.0"	4.0"	4.0"	4.0"	4.0"	4.0"	4.0"	4.0"					
	40	5.0"	4.0"	4.0"	4.0"	4.0"	4.0"	4.0"	4.0"	4.0"	4.0"	4.0"	4.0"	4.0"														
	45	4.0"	4.0"	4.0"	4.0"	4.0"	4.0"	4.0"	4.0"																			
	50	4.0"	4.0"	4.0"	4.0"																							
	55	4.0"																										
	60																											

NOTES:
1. APPROVED FOR USE WITH ALL TRACKS

FRANK L. BENNARDO, P.E.
PE# 0046549
10/20/2017
FRANK L. BENNARDO, P.E.
46549
STATE OF FLORIDA
PROFESSIONAL ENGINEER
ENGINEERING EXPRESS®
CORPORATE OFFICE:
160 SW 12th AVE, SUITE 106
DEERFIELD BEACH, FL 33442
P: (954) 354-0660 F: (954) 354-0443
E: HELLO@ENGINEERINGEXPRESS.COM
ENGINEERINGEXPRESS.COM
CERT OF AUTH #9885

STORM SMART INDUSTRIES, INC.
6182 IDLEWILD STREET
FORT MYERS , FL
(239) 938-1000

STORM CATCHER WIND ABATEMENT SYSTEM FL11291.2 HVHZ
-
-, FL

REMARKS	DRWN	CHKD	DATE
INIT ISSUE	RWN	FLB	10/18/17

THIS DOCUMENT IS THE PROPERTY OF ENGINEERING EXPRESS, AND SHALL NOT BE REPRODUCED IN WHOLE OR PART WITHOUT WRITTEN CONSENT OF ENGINEERING EXPRESS. ALTERATIONS, ADDITIONS, OR OTHER MARKINGS TO THIS DOCUMENT ARE NOT PERMITTED AND INVALIDATE OUR CERTIFICATION.

COPYRIGHT ENGINEERING EXPRESS®

16-3080

SCALE: NTS UNLESS NOTED

V:\Projects\16-3080 Storm Catcher Wind Abatement System FL11291-R4\WP\2017 FBC Update\16-3080e-Dwg-11291.2.dwg
10/20/2017 - 3:07pm zachr

½" POWERS DROP-IN

TABLE 5 - CONCRETE

HOST STRUCT.	ANCHOR TYPE	LOAD (psf)	SPANS 0" ≤ 3'	SPANS 3' ≤ 3'-6"	SPANS 3'-7" ≤ 4'	SPANS 4' ≤ 4'-6"	SPANS 4'-7" ≤ 5'	SPANS 5' ≤ 5'-6"	SPANS 5'-7" ≤ 6'	SPANS 6' ≤ 6'-6"	SPANS 6'-7" ≤ 7'	SPANS 7' ≤ 7'-6"	SPANS 7'-7" ≤ 8'	SPANS 8' ≤ 8'-6"	SPANS 8'-7" ≤ 9'	SPANS 9' ≤ 9'-6"	SPANS 9'-7" ≤ 10'	SPANS 10' ≤ 10'-6"	SPANS 10'-7" ≤ 11'	SPANS 11' ≤ 11'-6"	SPANS 11'-7" ≤ 12'	SPANS 12' ≤ 12'-6"	SPANS 12'-7" ≤ 13'	SPANS 13' ≤ 13'-6"	SPANS 13'-7" ≤ 14'	SPANS 14' ≤ 14'-6"	SPANS 14'-7" ≤ 15'	SPANS 15' ≤ 15'-6"	SPANS 15'-7" ≤ 16'
			3" MIN EDGE DISTANCE																									
CONCRETE	1/2" POWERS DROP-IN 2" EMBEDMENT (3000 PSI CONC)	30	24.0"	24.0"	24.0"	24.0"	24.0"	24.0"	24.0"	24.0"	24.0"	24.0"	24.0"	24.0"	24.0"	24.0"	24.0"	24.0"	24.0"	24.0"	24.0"	24.0"	24.0"	23.0"	23.0"	22.0"	21.0"	21.0"
		35	24.0"	24.0"	24.0"	24.0"	24.0"	24.0"	24.0"	24.0"	24.0"	24.0"	24.0"	24.0"	24.0"	24.0"	24.0"	24.0"	24.0"	23.0"	22.0"	22.0"	21.0"	21.0"	20.0"	19.0"	19.0"	18.0"
		40	24.0"	24.0"	24.0"	24.0"	24.0"	24.0"	24.0"	24.0"	24.0"	24.0"	24.0"	24.0"	24.0"	24.0"	24.0"	23.0"	22.0"	22.0"	21.0"	20.0"	20.0"	19.0"	18.0"	18.0"	17.0"	17.0"
		45	24.0"	24.0"	24.0"	24.0"	24.0"	24.0"	24.0"	24.0"	24.0"	24.0"	24.0"	24.0"	24.0"	23.0"	22.0"	21.0"	20.0"	20.0"	19.0"	18.0"	18.0"	17.0"	17.0"	16.0"	16.0"	15.0"
		50	24.0"	24.0"	24.0"	24.0"	24.0"	24.0"	24.0"	24.0"	24.0"	24.0"	24.0"	23.0"	22.0"	21.0"	20.0"	19.0"	19.0"	18.0"	17.0"	17.0"	16.0"	16.0"	15.0"	15.0"	14.0"	14.0"
		55	24.0"	24.0"	24.0"	24.0"	24.0"	24.0"	24.0"	24.0"	24.0"	24.0"	22.0"	21.0"	20.0"	19.0"	19.0"	18.0"	17.0"	17.0"	16.0"	16.0"	15.0"	15.0"	14.0"	14.0"	13.0"	13.0"
		60	24.0"	24.0"	24.0"	24.0"	24.0"	24.0"	24.0"	24.0"	23.0"	22.0"	21.0"	20.0"	19.0"	18.0"	17.0"	17.0"	16.0"	16.0"	15.0"	15.0"	14.0"	14.0"	13.0"	13.0"	12.0"	12.0"
		65	18.0"	18.0"	18.0"	18.0"	18.0"	18.0"	18.0"	18.0"	18.0"	18.0"	18.0"	18.0"	17.0"	16.0"	15.0"	15.0"	14.0"	14.0"	13.0"	13.0"	12.0"	12.0"	12.0"	11.0"	11.0"	11.0"
		70	18.0"	18.0"	18.0"	18.0"	18.0"	18.0"	18.0"	18.0"	18.0"	18.0"	18.0"	18.0"	17.0"	16.0"	15.0"	15.0"	14.0"	14.0"	13.0"	13.0"	12.0"	12.0"	12.0"	11.0"	11.0"	10.0"
		75	18.0"	18.0"	18.0"	18.0"	18.0"	18.0"	18.0"	18.0"	18.0"	18.0"	17.0"	17.0"	16.0"	15.0"	14.0"	14.0"	13.0"	13.0"	12.0"	12.0"	12.0"	11.0"	11.0"	11.0"	10.0"	10.0"
		80	18.0"	18.0"	18.0"	18.0"	18.0"	18.0"	18.0"	18.0"	18.0"	17.0"	17.0"	16.0"	15.0"	14.0"	14.0"	13.0"	13.0"	12.0"	12.0"	11.0"	11.0"	11.0"	10.0"	10.0"	10.0"	9.0"
		85	18.0"	18.0"	18.0"	18.0"	18.0"	18.0"	18.0"	18.0"	18.0"	17.0"	16.0"	15.0"	14.0"	14.0"	13.0"	13.0"	12.0"	12.0"	11.0"	11.0"	10.0"	10.0"	10.0"	9.0"	9.0"	9.0"
		90	12.0"	12.0"	12.0"	12.0"	12.0"	12.0"	12.0"	12.0"	12.0"	12.0"	12.0"	12.0"	12.0"	12.0"	12.0"	12.0"	12.0"	11.0"	11.0"	11.0"	10.0"	10.0"	9.0"	9.0"	9.0"	9.0"
		95	12.0"	12.0"	12.0"	12.0"	12.0"	12.0"	12.0"	12.0"	12.0"	12.0"	12.0"	12.0"	12.0"	12.0"	12.0"	11.0"	11.0"	11.0"	10.0"	10.0"	9.0"	9.0"	9.0"	9.0"	8.0"	8.0"
		100	12.0"	12.0"	12.0"	12.0"	12.0"	12.0"	12.0"	12.0"	12.0"	12.0"	12.0"	12.0"	12.0"	12.0"	11.0"	11.0"	10.0"	10.0"	10.0"	9.0"	9.0"	9.0"	8.0"	8.0"	8.0"	8.0"
		105	12.0"	12.0"	12.0"	12.0"	12.0"	12.0"	12.0"	12.0"	12.0"	12.0"	12.0"	12.0"	12.0"	11.0"	11.0"	10.0"	10.0"	10.0"	9.0"	9.0"	9.0"	8.0"	8.0"	8.0"	8.0"	7.0"
		110	12.0"	12.0"	12.0"	12.0"	12.0"	12.0"	12.0"	12.0"	12.0"	12.0"	12.0"	12.0"	11.0"	11.0"	10.0"	10.0"	10.0"	9.0"	9.0"	9.0"	8.0"	8.0"	8.0"	8.0"	7.0"	7.0"
		115	12.0"	12.0"	12.0"	12.0"	12.0"	12.0"	12.0"	12.0"	12.0"	12.0"	12.0"	12.0"	11.0"	11.0"	10.0"	10.0"	9.0"	9.0"	9.0"	8.0"	8.0"	8.0"	7.0"	7.0"	7.0"	7.0"
		120	12.0"	12.0"	12.0"	12.0"	12.0"	12.0"	12.0"	12.0"	12.0"	12.0"	12.0"	11.0"	11.0"	10.0"	10.0"	9.0"	9.0"	9.0"	8.0"	8.0"	8.0"	7.0"	7.0"	7.0"	7.0"	6.0"
		125	12.0"	12.0"	12.0"	12.0"	12.0"	12.0"	12.0"	12.0"	12.0"	12.0"	11.0"	11.0"	10.0"	10.0"	9.0"	9.0"	9.0"	8.0"	8.0"	8.0"	7.0"	7.0"	7.0"	7.0"	7.0"	6.0"
		130	12.0"	12.0"	12.0"	12.0"	12.0"	12.0"	12.0"	12.0"	12.0"	12.0"	11.0"	10.0"	10.0"	9.0"	9.0"	9.0"	8.0"	8.0"	8.0"	7.0"	7.0"	7.0"	7.0"	7.0"	6.0"	6.0"
			3" MIN EDGE DISTANCE																									
	1/2" POWERS DROP-IN 2" EMBEDMENT (2500 PSI CONC)	30	24.0"	24.0"	24.0"	24.0"	24.0"	24.0"	24.0"	24.0"	24.0"	24.0"	24.0"	24.0"	24.0"	24.0"	24.0"	24.0"	24.0"	24.0"	24.0"	24.0"	24.0"	24.0"	24.0"	23.0"	23.0"	22.0"
		35	24.0"	24.0"	24.0"	24.0"	24.0"	24.0"	24.0"	24.0"	24.0"	24.0"	24.0"	24.0"	24.0"	24.0"	24.0"	24.0"	24.0"	24.0"	23.0"	23.0"	22.0"	21.0"	21.0"	20.0"	20.0"	19.0"
		40	24.0"	24.0"	24.0"	24.0"	24.0"	24.0"	24.0"	24.0"	24.0"	24.0"	24.0"	24.0"	24.0"	24.0"	24.0"	23.0"	22.0"	22.0"	21.0"	20.0"	20.0"	19.0"	19.0"	18.0"	18.0"	17.0"
		45	24.0"	24.0"	24.0"	24.0"	24.0"	24.0"	24.0"	24.0"	24.0"	24.0"	24.0"	24.0"	24.0"	24.0"	23.0"	22.0"	21.0"	20.0"	20.0"	19.0"	19.0"	18.0"	17.0"	17.0"	17.0"	16.0"
		50	24.0"	24.0"	24.0"	24.0"	24.0"	24.0"	24.0"	24.0"	24.0"	24.0"	24.0"	24.0"	23.0"	22.0"	21.0"	20.0"	19.0"	19.0"	18.0"	18.0"	17.0"	17.0"	16.0"	16.0"	15.0"	15.0"
		55	24.0"	24.0"	24.0"	24.0"	24.0"	24.0"	24.0"	24.0"	24.0"	24.0"	23.0"	22.0"	21.0"	20.0"	19.0"	18.0"	17.0"	17.0"	16.0"	16.0"	15.0"	15.0"	14.0"	14.0"	13.0"	13.0"
		60	24.0"	24.0"	24.0"	24.0"	24.0"	24.0"	24.0"	24.0"	24.0"	23.0"	22.0"	21.0"	20.0"	19.0"	18.0"	17.0"	17.0"	16.0"	16.0"	15.0"	15.0"	14.0"	14.0"	13.0"	13.0"	12.0"
		65	18.0"	18.0"	18.0"	18.0"	18.0"	18.0"	18.0"	18.0"	18.0"	18.0"	18.0"	18.0"	18.0"	18.0"	17.0"	16.0"	16.0"	15.0"	15.0"	14.0"	14.0"	13.0"	13.0"	13.0"	12.0"	12.0"
		70	18.0"	18.0"	18.0"	18.0"	18.0"	18.0"	18.0"	18.0"	18.0"	18.0"	18.0"	18.0"	17.0"	17.0"	16.0"	15.0"	15.0"	14.0"	14.0"	13.0"	13.0"	13.0"	12.0"	12.0"	11.0"	11.0"
		75	18.0"	18.0"	18.0"	18.0"	18.0"	18.0"	18.0"	18.0"	18.0"	18.0"	18.0"	17.0"	17.0"	16.0"	15.0"	15.0"	14.0"	14.0"	13.0"	13.0"	12.0"	12.0"	11.0"	11.0"	11.0"	10.0"
		80	18.0"	18.0"	18.0"	18.0"	18.0"	18.0"	18.0"	18.0"	18.0"	18.0"	17.0"	16.0"	16.0"	15.0"	14.0"	14.0"	13.0"	13.0"	12.0"	12.0"	12.0"	11.0"	11.0"	11.0"	10.0"	10.0"
		85	18.0"	18.0"	18.0"	18.0"	18.0"	18.0"	18.0"	18.0"	18.0"	17.0"	16.0"	16.0"	15.0"	14.0"	14.0"	13.0"	13.0"	12.0"	12.0"	11.0"	11.0"	11.0"	10.0"	10.0"	9.0"	9.0"
		90	12.0"	12.0"	12.0"	12.0"	12.0"	12.0"	12.0"	12.0"	12.0"	12.0"	12.0"	12.0"	12.0"	12.0"	12.0"	12.0"	12.0"	12.0"	11.0"	11.0"	10.0"	10.0"	10.0"	9.0"	9.0"	9.0"
		95	12.0"	12.0"	12.0"	12.0"	12.0"	12.0"	12.0"	12.0"	12.0"	12.0"	12.0"	12.0"	12.0"	12.0"	12.0"	12.0"	12.0"	11.0"	11.0"	10.0"	10.0"	10.0"	9.0"	9.0"	9.0"	8.0"
		100	12.0"	12.0"	12.0"	12.0"	12.0"	12.0"	12.0"	12.0"	12.0"	12.0"	12.0"	12.0"	12.0"	12.0"	12.0"	11.0"	11.0"	11.0"	10.0"	10.0"	10.0"	9.0"	9.0"	9.0"	8.0"	8.0"
		105	12.0"	12.0"	12.0"	12.0"	12.0"	12.0"	12.0"	12.0"	12.0"	12.0"	12.0"	12.0"	12.0"	12.0"	11.0"	11.0"	11.0"	10.0"	10.0"	10.0"	9.0"	9.0"	9.0"	8.0"	8.0"	8.0"
		110	12.0"	12.0"	12.0"	12.0"	12.0"	12.0"	12.0"	12.0"	12.0"	12.0"	12.0"	12.0"	12.0"	12.0"	11.0"	11.0"	10.0"	10.0"	9.0"	9.0"	9.0"	9.0"	8.0"	8.0"	8.0"	7.0"
		115	12.0"	12.0"	12.0"	12.0"	12.0"	12.0"	12.0"	12.0"	12.0"	12.0"	12.0"	12.0"	12.0"	11.0"	11.0"	10.0"	10.0"	9.0"	9.0"	9.0"	9.0"	8.0"	8.0"	8.0"	7.0"	7.0"
		120	12.0"	12.0"	12.0"	12.0"	12.0"	12.0"	12.0"	12.0"	12.0"	12.0"	12.0"	12.0"	11.0"	11.0"	10.0"	10.0"	9.0"	9.0"	9.0"	8.0"	8.0"	8.0"	7.0"	7.0"	7.0"	7.0"
		125	12.0"	12.0"	12.0"	12.0"	12.0"	12.0"	12.0"	12.0"	12.0"	12.0"	12.0"	11.0"	11.0"	10.0"	10.0"	10.0"	9.0"	9.0"	8.0"	8.0"	8.0"	7.0"	7.0"	7.0"	7.0"	7.0"
		130	12.0"	12.0"	12.0"	12.0"	12.0"	12.0"	12.0"	12.0"	12.0"	12.0"	12.0"	11.0"	10.0"	10.0"	10.0"	9.0"	9.0"	9.0"	8.0"	8.0"	8.0"	7.0"	7.0"	7.0"	7.0"	6.0"

HOST STRUCT.	ANCHOR TYPE	LOAD (psf)	SPANS 16' ≤ 16'-6"	SPANS 16'-7" ≤ 17'	SPANS 17' ≤ 17'-6"	SPANS 17'-7" ≤ 18'	SPANS 18' ≤ 18'-6"	SPANS 18'-7" ≤ 19'	SPANS 19' ≤ 19'-6"	SPANS 19'-7" ≤ 20'	SPANS 20' ≤ 20'-6"	SPANS 20'-7" ≤ 21'	SPANS 21' ≤ 21'-6"	SPANS 21'-7" ≤ 22'	SPANS 22' ≤ 22'-6"	SPANS 22'-7" ≤ 23'	SPANS 23' ≤ 23'-6"	SPANS 23'-7" ≤ 24'	SPANS 24' ≤ 24'-6"	SPANS 24'-7" ≤ 25'	SPANS 25' ≤ 25'-6"	SPANS 25'-7" ≤ 26'	SPANS 26' ≤ 26'-6"	SPANS 26'-7" ≤ 27'	SPANS 27' ≤ 27'-6"	SPANS 27'-7" ≤ 28'	SPANS 28' ≤ 28'-6"	SPANS 28'-7" ≤ 29'	SPANS 29' ≤ 29'-6"	SPANS 29'-7" ≤ 30'
			3" MIN EDGE DISTANCE																											
CONCRETE	1/2" POWERS DROP-IN 2" EMBEDMENT (3000 PSI CONC)	30	20.0"	20.0"	19.0"	19.0"	19.0"	18.0"	18.0"	17.0"	17.0"	17.0"	16.0"	16.0"	16.0"	16.0"	15.0"	15.0"	15.0"	15.0"	14.0"	14.0"	14.0"	14.0"	14.0"	14.0"	13.0"	13.0"	13.0"	13.0"
		35	18.0"	18.0"	17.0"	17.0"	16.0"	16.0"	16.0"	15.0"	15.0"	15.0"	14.0"	14.0"	14.0"	14.0"	13.0"	13.0"	13.0"	13.0"	13.0"	12.0"	12.0"	12.0"	12.0"	12.0"	12.0"	11.0"	11.0"
		40	16.0"	16.0"	15.0"	15.0"	15.0"	14.0"	14.0"	14.0"	13.0"	13.0"	13.0"	13.0"	12.0"	12.0"	12.0"	12.0"	12.0"	11.0"	11.0"	11.0"	11.0"	11.0"	11.0"	10.0"	10.0"	10.0"	10.0"	10.0"
		45	15.0"	14.0"	14.0"	14.0"	13.0"	13.0"	13.0"	12.0"	12.0"	12.0"	12.0"	11.0"	11.0"	11.0"	11.0"	11.0"	11.0"	10.0"	10.0"	10.0"	10.0"	10.0"	10.0"	9.0"	9.0"	9.0"	9.0"	9.0"
		50	13.0"	13.0"	13.0"	12.0"	12.0"	12.0"	12.0"	11.0"	11.0"	11.0"	11.0"	10.0"	10.0"	10.0"	10.0"	10.0"	10.0"	9.0"	9.0"	9.0"	9.0"	9.0"	9.0"	9.0"	8.0"	8.0"	8.0"	8.0"
		55	12.0"	12.0"	12.0"	11.0"	11.0"	11.0"	11.0"	10.0"	10.0"	10.0"	10.0"	10.0"	9.0"	9.0"	9.0"	9.0"	9.0"	9.0"	8.0"	8.0"	8.0"	8.0"	8.0"	8.0"	8.0"	8.0"	8.0"	8.0"
		60	11.0"	11.0"	11.0"	11.0"	10.0"	10.0"	10.0"	10.0"	9.0"	9.0"	9.0"	9.0"	9.0"	9.0"	8.0"	8.0"	8.0"	8.0"	8.0"	8.0"	8.0"	8.0"	8.0"	7.0"	7.0"	7.0"	7.0"	7.0"
			3" MIN EDGE DISTANCE																											
	1/2" POWERS DROP-IN 2" EMBEDMENT (2500 PSI CONC)	30	21.0"	21.0"	20.0"	20.0"	19.0"	19.0"	18.0"	18.0"	18.0"	17.0"	17.0"	17.0"	16.0"	16.0"	16.0"	16.0"	15.0"	15.0"	15.0"	15.0"	15.0"	15.0"	14.0"	14.0"	14.0"	14.0"	14.0"	14.0"
		35	19.0"	18.0"	18.0"	17.0"	17.0"	17.0"	16.0"	16.0"	16.0"	15.0"	15.0"	15.0"	15.0"	14.0"	14.0"	14.0"	14.0"	13.0"	13.0"	13.0"	13.0"	13.0"	13.0"	12.0"	12.0"	12.0"	12.0"	12.0"
		40	17.0"	16.0"	16.0"	16.0"	15.0"	15.0"	15.0"	14.0"	14.0"	14.0"	14.0"	13.0"	13.0"	13.0"	13.0"	12.0"	12.0"	12.0"	12.0"	12.0"	12.0"	12.0"	11.0"	11.0"	11.0"	11.0"	11.0"	11.0"
		45	15.0"	15.0"	15.0"	14.0"	14.0"	14.0"	13.0"	13.0"	13.0"	13.0"	12.0"	12.0"	12.0"	12.0"	11.0"	11.0"	11.0"	11.0"	11.0"	11.0"	11.0"	10.0"	10.0"	10.0"	10.0"	10.0"	10.0"	10.0"
		50	14.0"	14.0"	13.0"	13.0"	13.0"	12.0"	12.0"	12.0"	12.0"	11.0"	11.0"	11.0"	11.0"	11.0"	10.0"	10.0"	10.0"	10.0"	10.0"	10.0"	10.0"	9.0"	9.0"	9.0"	9.0"	9.0"	9.0"	9.0"
		55	13.0"	13.0"	12.0"	12.0"	12.0"	12.0"	11.0"	11.0"	11.0"	11.0"	10.0"	10.0"	10.0"	10.0"	10.0"	9.0"	9.0"	9.0"	9.0"	9.0"	9.0"	9.0"	9.0"	8.0"	8.0"	8.0"	8.0"	8.0"
		60	12.0"	12.0"	11.0"	11.0"	11.0"	11.0"	10.0"	10.0"	10.0"	10.0"	10.0"	9.0"	9.0"	9.0"	9.0"	9.0"	9.0"	9.0"	8.0"	8.0"	8.0"	8.0"	8.0"	8.0"	8.0"	8.0"	8.0"	8.0"

NOTES:

1. APPROVED FOR USE WITH ½" EYE BOLTS.

FRANK L. BENNARDO, P.E.
PE#0046549
10/20/2017
FRANK L. BENNARDO, P.E.
No PE0046549
STATE OF FLORIDA
PROFESSIONAL ENGINEER

ENGINEERING EXPRESS
CORPORATE OFFICE:
160 SW 12th AVE, SUITE 100
DEERFIELD BEACH, FL 33442
P: (954) 354-0660 F: (954) 354-0443
E: HELLO@ENGINEERINGEXPRESS.COM
ENGINEERINGEXPRESS.COM
CERT OF AUTH #9885

STORM SMART INDUSTRIES, INC.
6182 IDLEWILD STREET
FORT MYERS , FL
(239) 938-1000

STORM CATCHER WIND ABATEMENT SYSTEM FL11291.2 HVHZ
-
-, FL

REMARKS	DRWN	CHKD	DATE
INIT ISSUE	RWN	FLB	10/18/17

THIS DOCUMENT IS THE PROPERTY OF ENGINEERING EXPRESS, AND SHALL NOT BE REPRODUCED IN WHOLE OR PART WITHOUT WRITTEN CONSENT OF ENGINEERING EXPRESS. ALTERATIONS, ADDITIONS, OR OTHER MARKINGS TO THIS DOCUMENT ARE NOT PERMITTED AND INVALIDATE OUR CERTIFICATION.

COPYRIGHT ENGINEERING EXPRESS ®

16-3080

SCALE: NTS UNLESS NOTED

V:\Projects\16-3080 Storm Catcher Wind Abatement System FL11291-R4\WP\2017 FBC Update\16-3080e-Dwg-11291.2.dwg
zachr
10/20/2017 - 3:07pm

3/8" POWERS DROP-IN

TABLE 6 - CONCRETE

HOST STRUCT.	ANCHOR TYPE	LOAD (psf)	SPANS 0" ≤ 3'	SPANS 3' ≤ 3'-6"	SPANS 3'-7" ≤ 4'	SPANS 4' ≤ 4'-6"	SPANS 4'-7" ≤ 5'	SPANS 5' ≤ 5'-6"	SPANS 5'-7" ≤ 6'	SPANS 6' ≤ 6'-6"	SPANS 6'-7" ≤ 7'	SPANS 7' ≤ 7'-6"	SPANS 7'-7" ≤ 8'	SPANS 8' ≤ 8'-6"	SPANS 8'-7" ≤ 9'	SPANS 9' ≤ 9'-6"	SPANS 9'-7" ≤ 10'	SPANS 10' ≤ 10'-6"	SPANS 10'-7" ≤ 11'	SPANS 11' ≤ 11'-6"	SPANS 11'-7" ≤ 12'	SPANS 12' ≤ 12'-6"	SPANS 12'-7" ≤ 13'	SPANS 13' ≤ 13'-6"	SPANS 13'-7" ≤ 14'	SPANS 14' ≤ 14'-6"	SPANS 14'-7" ≤ 15'	SPANS 15' ≤ 15'-6"	SPANS 15'-7" ≤ 16'
			5 1/4" MIN EDGE DISTANCE																										
CONCRETE	3/8" POWERS DROP-IN 1-9/16" EMBEDMENT (3000 PSI CONC)	30	24.0"	24.0"	24.0"	24.0"	24.0"	24.0"	24.0"	24.0"	24.0"	23.0"	22.0"	21.0"	20.0"	20.0"	19.0"	18.0"	18.0"	17.0"	16.0"	16.0"	15.0"	15.0"	15.0"	14.0"	14.0"	13.0"	13.0"
		35	24.0"	24.0"	24.0"	24.0"	24.0"	24.0"	24.0"	23.0"	22.0"	21.0"	20.0"	19.0"	18.0"	17.0"	17.0"	16.0"	16.0"	15.0"	15.0"	14.0"	14.0"	13.0"	13.0"	12.0"	12.0"	12.0"	12.0"
		40	24.0"	24.0"	24.0"	24.0"	24.0"	24.0"	22.0"	21.0"	20.0"	19.0"	18.0"	17.0"	16.0"	16.0"	15.0"	15.0"	14.0"	14.0"	13.0"	13.0"	12.0"	12.0"	12.0"	11.0"	11.0"	11.0"	10.0"
		45	24.0"	24.0"	24.0"	24.0"	23.0"	22.0"	20.0"	19.0"	18.0"	17.0"	16.0"	16.0"	15.0"	14.0"	14.0"	13.0"	13.0"	12.0"	12.0"	12.0"	11.0"	11.0"	11.0"	10.0"	10.0"	10.0"	9.0"
		50	24.0"	24.0"	24.0"	23.0"	22.0"	20.0"	19.0"	18.0"	17.0"	16.0"	15.0"	14.0"	14.0"	13.0"	13.0"	12.0"	12.0"	11.0"	11.0"	11.0"	10.0"	10.0"	10.0"	9.0"	9.0"	9.0"	9.0"
		55	24.0"	24.0"	24.0"	22.0"	20.0"	19.0"	18.0"	16.0"	16.0"	15.0"	14.0"	13.0"	13.0"	12.0"	12.0"	11.0"	11.0"	10.0"	10.0"	10.0"	9.0"	9.0"	9.0"	9.0"	8.0"	8.0"	8.0"
		60	24.0"	24.0"	22.0"	20.0"	19.0"	18.0"	16.0"	15.0"	15.0"	14.0"	13.0"	12.0"	12.0"	11.0"	11.0"	11.0"	10.0"	10.0"	9.0"	9.0"	9.0"	9.0"	8.0"	8.0"	8.0"	8.0"	7.0"
		65	18.0"	18.0"	18.0"	18.0"	18.0"	16.0"	15.0"	14.0"	14.0"	13.0"	12.0"	12.0"	11.0"	11.0"	10.0"	10.0"	9.0"	9.0"	9.0"	8.0"	8.0"	8.0"	8.0"	8.0"	7.0"	7.0"	7.0"
		70	18.0"	18.0"	18.0"	17.0"	17.0"	16.0"	15.0"	14.0"	13.0"	12.0"	12.0"	11.0"	11.0"	10.0"	10.0"	9.0"	9.0"	9.0"	8.0"	8.0"	8.0"	8.0"	7.0"	7.0"	7.0"	7.0"	7.0"
		75	18.0"	18.0"	18.0"	17.0"	16.0"	15.0"	14.0"	13.0"	12.0"	12.0"	11.0"	10.0"	10.0"	10.0"	9.0"	9.0"	8.0"	8.0"	8.0"	8.0"	7.0"	7.0"	7.0"	7.0"	6.0"	6.0"	6.0"
		80	18.0"	18.0"	18.0"	16.0"	15.0"	14.0"	13.0"	12.0"	12.0"	11.0"	10.0"	10.0"	9.0"	9.0"	9.0"	8.0"	8.0"	8.0"	8.0"	7.0"	7.0"	7.0"	7.0"	6.0"	6.0"	6.0"	6.0"
		85	18.0"	18.0"	17.0"	16.0"	14.0"	13.0"	12.0"	12.0"	11.0"	10.0"	10.0"	9.0"	9.0"	9.0"	8.0"	8.0"	8.0"	7.0"	7.0"	7.0"	7.0"	6.0"	6.0"	6.0"	6.0"	6.0"	5.0"
		90	12.0"	12.0"	12.0"	12.0"	12.0"	12.0"	12.0"	11.0"	11.0"	10.0"	9.0"	9.0"	9.0"	8.0"	8.0"	8.0"	7.0"	7.0"	7.0"	6.0"	6.0"	6.0"	6.0"	6.0"	5.0"	5.0"	5.0"
		95	12.0"	12.0"	12.0"	12.0"	12.0"	12.0"	11.0"	11.0"	10.0"	10.0"	9.0"	9.0"	8.0"	8.0"	7.0"	7.0"	7.0"	7.0"	6.0"	6.0"	6.0"	6.0"	6.0"	5.0"	5.0"	5.0"	5.0"
		100	12.0"	12.0"	12.0"	12.0"	12.0"	12.0"	11.0"	10.0"	10.0"	9.0"	9.0"	8.0"	8.0"	7.0"	7.0"	7.0"	7.0"	6.0"	6.0"	6.0"	6.0"	6.0"	5.0"	5.0"	5.0"	5.0"	5.0"
		105	12.0"	12.0"	12.0"	12.0"	12.0"	11.0"	11.0"	10.0"	9.0"	9.0"	8.0"	8.0"	8.0"	7.0"	7.0"	7.0"	6.0"	6.0"	6.0"	6.0"	5.0"	5.0"	5.0"	5.0"	5.0"	5.0"	5.0"
		110	12.0"	12.0"	12.0"	12.0"	12.0"	11.0"	10.0"	9.0"	9.0"	8.0"	8.0"	8.0"	7.0"	7.0"	7.0"	6.0"	6.0"	6.0"	6.0"	5.0"	5.0"	5.0"	5.0"	5.0"	5.0"		
		115	12.0"	12.0"	12.0"	12.0"	11.0"	10.0"	10.0"	9.0"	9.0"	8.0"	8.0"	7.0"	7.0"	7.0"	6.0"	6.0"	6.0"	6.0"	5.0"	5.0"	5.0"	5.0"	5.0"	5.0"			
		120	12.0"	12.0"	12.0"	12.0"	11.0"	10.0"	9.0"	9.0"	8.0"	8.0"	7.0"	7.0"	7.0"	6.0"	6.0"	6.0"	6.0"	5.0"	5.0"	5.0"	5.0"	5.0"	5.0"				
		125	12.0"	12.0"	12.0"	12.0"	11.0"	10.0"	9.0"	9.0"	8.0"	8.0"	7.0"	7.0"	6.0"	6.0"	6.0"	6.0"	5.0"	5.0"	5.0"	5.0"	5.0"	5.0"					
		130	12.0"	12.0"	12.0"	11.0"	10.0"	9.0"	9.0"	8.0"	8.0"	7.0"	7.0"	7.0"	6.0"	6.0"	6.0"	6.0"	5.0"	5.0"	5.0"	5.0"	5.0"						
			5 1/4" MIN EDGE DISTANCE																										
	3/8" POWERS DROP-IN 1-9/16" EMBEDMENT (2500 PSI CONC)	30	24.0"	24.0"	24.0"	24.0"	24.0"	24.0"	24.0"	24.0"	23.0"	22.0"	21.0"	20.0"	19.0"	18.0"	18.0"	17.0"	16.0"	16.0"	15.0"	15.0"	14.0"	14.0"	13.0"	13.0"	13.0"	12.0"	12.0"
		35	24.0"	24.0"	24.0"	24.0"	24.0"	24.0"	23.0"	22.0"	20.0"	19.0"	18.0"	18.0"	17.0"	16.0"	16.0"	15.0"	14.0"	14.0"	13.0"	13.0"	13.0"	12.0"	12.0"	12.0"	11.0"	11.0"	11.0"
		40	24.0"	24.0"	24.0"	24.0"	24.0"	22.0"	21.0"	20.0"	18.0"	18.0"	17.0"	16.0"	15.0"	15.0"	14.0"	13.0"	13.0"	12.0"	12.0"	12.0"	11.0"	11.0"	11.0"	10.0"	10.0"	10.0"	10.0"
		45	24.0"	24.0"	24.0"	24.0"	22.0"	20.0"	19.0"	18.0"	17.0"	16.0"	15.0"	14.0"	14.0"	13.0"	13.0"	12.0"	12.0"	11.0"	11.0"	11.0"	10.0"	10.0"	10.0"	9.0"	9.0"	9.0"	9.0"
		50	24.0"	24.0"	24.0"	22.0"	20.0"	19.0"	18.0"	16.0"	16.0"	15.0"	14.0"	13.0"	13.0"	12.0"	12.0"	11.0"	11.0"	10.0"	10.0"	10.0"	9.0"	9.0"	9.0"	9.0"	8.0"	8.0"	8.0"
		55	24.0"	24.0"	22.0"	20.0"	19.0"	17.0"	16.0"	15.0"	14.0"	14.0"	13.0"	12.0"	12.0"	11.0"	11.0"	10.0"	10.0"	10.0"	9.0"	9.0"	9.0"	8.0"	8.0"	8.0"	8.0"	8.0"	7.0"
		60	24.0"	23.0"	21.0"	19.0"	18.0"	16.0"	15.0"	14.0"	13.0"	13.0"	12.0"	11.0"	11.0"	10.0"	10.0"	9.0"	9.0"	9.0"	9.0"	8.0"	8.0"	8.0"	8.0"	7.0"	7.0"	7.0"	7.0"
		65	18.0"	18.0"	18.0"	18.0"	16.0"	15.0"	14.0"	13.0"	13.0"	12.0"	11.0"	11.0"	10.0"	10.0"	9.0"	9.0"	9.0"	8.0"	8.0"	8.0"	8.0"	7.0"	7.0"	7.0"	7.0"	6.0"	6.0"
		70	18.0"	18.0"	18.0"	17.0"	16.0"	14.0"	13.0"	13.0"	12.0"	11.0"	11.0"	10.0"	10.0"	9.0"	9.0"	9.0"	8.0"	8.0"	8.0"	7.0"	7.0"	7.0"	6.0"	6.0"	6.0"	6.0"	6.0"
		75	18.0"	18.0"	18.0"	16.0"	15.0"	14.0"	13.0"	12.0"	11.0"	11.0"	10.0"	10.0"	9.0"	9.0"	8.0"	8.0"	8.0"	7.0"	7.0"	7.0"	7.0"	6.0"	6.0"	6.0"	6.0"	6.0"	6.0"
		80	18.0"	18.0"	17.0"	15.0"	14.0"	13.0"	12.0"	11.0"	11.0"	10.0"	10.0"	9.0"	9.0"	8.0"	8.0"	8.0"	7.0"	7.0"	7.0"	6.0"	6.0"	6.0"	6.0"	6.0"	5.0"	5.0"	5.0"
		85	18.0"	18.0"	16.0"	14.0"	13.0"	12.0"	11.0"	11.0"	10.0"	10.0"	9.0"	9.0"	8.0"	8.0"	8.0"	7.0"	7.0"	7.0"	6.0"	6.0"	6.0"	6.0"	6.0"	5.0"	5.0"	5.0"	5.0"
		90	12.0"	12.0"	12.0"	12.0"	12.0"	12.0"	11.0"	10.0"	10.0"	9.0"	9.0"	8.0"	8.0"	7.0"	7.0"	7.0"	7.0"	6.0"	6.0"	6.0"	6.0"	6.0"	5.0"	5.0"	5.0"	5.0"	5.0"
		95	12.0"	12.0"	12.0"	12.0"	12.0"	11.0"	11.0"	10.0"	9.0"	9.0"	8.0"	8.0"	7.0"	7.0"	7.0"	7.0"	6.0"	6.0"	6.0"	6.0"	5.0"	5.0"	5.0"	5.0"	5.0"	5.0"	5.0"
		100	12.0"	12.0"	12.0"	12.0"	12.0"	11.0"	10.0"	9.0"	9.0"	8.0"	8.0"	8.0"	7.0"	7.0"	7.0"	6.0"	6.0"	6.0"	6.0"	5.0"	5.0"	5.0"	5.0"	5.0"	5.0"		
		105	12.0"	12.0"	12.0"	12.0"	11.0"	10.0"	10.0"	9.0"	9.0"	8.0"	8.0"	7.0"	7.0"	7.0"	6.0"	6.0"	6.0"	6.0"	5.0"	5.0"	5.0"	5.0"	5.0"				
		110	12.0"	12.0"	12.0"	12.0"	11.0"	10.0"	9.0"	9.0"	8.0"	8.0"	7.0"	7.0"	7.0"	6.0"	6.0"	6.0"	6.0"	5.0"	5.0"	5.0"	5.0"	5.0"					
		115	12.0"	12.0"	12.0"	11.0"	10.0"	10.0"	9.0"	8.0"	8.0"	7.0"	7.0"	7.0"	6.0"	6.0"	6.0"	6.0"	5.0"	5.0"	5.0"	5.0"	5.0"						
		120	12.0"	12.0"	12.0"	11.0"	10.0"	9.0"	9.0"	8.0"	8.0"	7.0"	7.0"	6.0"	6.0"	6.0"	6.0"	5.0"	5.0"	5.0"	5.0"	5.0"							
		125	12.0"	12.0"	12.0"	11.0"	10.0"	9.0"	8.0"	8.0"	7.0"	7.0"	7.0"	6.0"	6.0"	6.0"	5.0"	5.0"	5.0"	5.0"	5.0"	5.0"							
		130	12.0"	12.0"	11.0"	10.0"	9.0"	9.0"	8.0"	8.0"	7.0"	7.0"	6.0"	6.0"	6.0"	5.0"	5.0"	5.0"	5.0"	5.0"									

HOST STRUCT.	ANCHOR TYPE	LOAD (psf)	SPANS 16' ≤ 16'-6"	SPANS 16'-7" ≤ 17'	SPANS 17' ≤ 17'-6"	SPANS 17'-7" ≤ 18'	SPANS 18' ≤ 18'-6"	SPANS 18'-7" ≤ 19'	SPANS 19' ≤ 19'-6"	SPANS 19'-7" ≤ 20'	SPANS 20' ≤ 20'-6"	SPANS 20'-7" ≤ 21'	SPANS 21' ≤ 21'-6"	SPANS 21'-7" ≤ 22'	SPANS 22' ≤ 22'-6"	SPANS 22'-7" ≤ 23'	SPANS 23' ≤ 23'-6"	SPANS 23'-7" ≤ 24'	SPANS 24' ≤ 24'-6"	SPANS 24'-7" ≤ 25'	SPANS 25' ≤ 25'-6"	SPANS 25'-7" ≤ 26'	SPANS 26' ≤ 26'-6"	SPANS 26'-7" ≤ 27'	SPANS 27' ≤ 27'-6"	SPANS 27'-7" ≤ 28'	SPANS 28' ≤ 28'-6"	SPANS 28'-7" ≤ 29'	SPANS 29' ≤ 29'-6"	SPANS 29'-7" ≤ 30'
			5 1/4" MIN EDGE DISTANCE																										
CONCRETE	3/8" POWERS DROP-IN 1-9/16" EMBEDMENT (3000 PSI CONC)	30	13.0"	12.0"	12.0"	12.0"	12.0"	11.0"	11.0"	11.0"	11.0"	10.0"	10.0"	10.0"	10.0"	10.0"	10.0"	9.0"	9.0"	9.0"	9.0"	9.0"	9.0"	9.0"	9.0"	9.0"	8.0"	8.0"	8.0"
		35	11.0"	11.0"	11.0"	10.0"	10.0"	10.0"	10.0"	10.0"	9.0"	9.0"	9.0"	9.0"	9.0"	9.0"	8.0"	8.0"	8.0"	8.0"	8.0"	8.0"	8.0"	8.0"	8.0"	8.0"	7.0"	7.0"	7.0"
		40	10.0"	10.0"	10.0"	9.0"	9.0"	9.0"	9.0"	9.0"	8.0"	8.0"	8.0"	8.0"	8.0"	8.0"	8.0"	7.0"	7.0"	7.0"	7.0"	7.0"	7.0"	7.0"	7.0"	7.0"	7.0"	6.0"	6.0"
		45	9.0"	9.0"	9.0"	9.0"	8.0"	8.0"	8.0"	8.0"	8.0"	8.0"	7.0"	7.0"	7.0"	7.0"	7.0"	7.0"	7.0"	6.0"	6.0"	6.0"	6.0"	6.0"	6.0"	6.0"	6.0"	6.0"	6.0"
		50	8.0"	8.0"	8.0"	8.0"	8.0"	7.0"	7.0"	7.0"	7.0"	7.0"	7.0"	7.0"	6.0"	6.0"	6.0"	6.0"	6.0"	6.0"	6.0"	6.0"	6.0"	6.0"	6.0"	5.0"	5.0"	5.0"	5.0"
		55	8.0"	8.0"	7.0"	7.0"	7.0"	7.0"	7.0"	7.0"	6.0"	6.0"	6.0"	6.0"	6.0"	6.0"	6.0"	6.0"	6.0"	5.0"	5.0"	5.0"	5.0"	5.0"	5.0"	5.0"	5.0"	5.0"	5.0"
		60	7.0"	7.0"	7.0"	7.0"	7.0"	6.0"	6.0"	6.0"	6.0"	6.0"	6.0"	6.0"	6.0"	5.0"	5.0"	5.0"	5.0"	5.0"	5.0"	5.0"	5.0"	5.0"	5.0"	5.0"	5.0"	5.0"	N/A
			5 1/4" MIN EDGE DISTANCE																										
	3/8" POWERS DROP-IN 1-9/16" EMBEDMENT (2500 PSI CONC)	30	12.0"	11.0"	11.0"	11.0"	11.0"	10.0"	10.0"	10.0"	10.0"	10.0"	9.0"	9.0"	9.0"	9.0"	9.0"	9.0"	9.0"	8.0"	8.0"	8.0"	8.0"	8.0"	8.0"	8.0"	8.0"	8.0"	7.0"
		35	10.0"	10.0"	10.0"	10.0"	9.0"	9.0"	9.0"	9.0"	9.0"	8.0"	8.0"	8.0"	8.0"	8.0"	8.0"	8.0"	7.0"	7.0"	7.0"	7.0"	7.0"	7.0"	7.0"	7.0"	7.0"	7.0"	7.0"
		40	9.0"	9.0"	9.0"	9.0"	8.0"	8.0"	8.0"	8.0"	8.0"	8.0"	7.0"	7.0"	7.0"	7.0"	7.0"	7.0"	7.0"	7.0"	6.0"	6.0"	6.0"	6.0"	6.0"	6.0"	6.0"	6.0"	6.0"
		45	8.0"	8.0"	8.0"	8.0"	8.0"	7.0"	7.0"	7.0"	7.0"	7.0"	7.0"	7.0"	6.0"	6.0"	6.0"	6.0"	6.0"	6.0"	6.0"	6.0"	6.0"	6.0"	5.0"	5.0"	5.0"	5.0"	5.0"
		50	8.0"	8.0"	7.0"	7.0"	7.0"	7.0"	7.0"	7.0"	6.0"	6.0"	6.0"	6.0"	6.0"	6.0"	6.0"	5.0"	5.0"	5.0"	5.0"	5.0"	5.0"	5.0"	5.0"	5.0"	5.0"	5.0"	5.0"
		55	7.0"	7.0"	7.0"	7.0"	6.0"	6.0"	6.0"	6.0"	6.0"	6.0"	6.0"	6.0"	5.0"	5.0"	5.0"	5.0"	5.0"	5.0"	5.0"	5.0"	5.0"	5.0"	5.0"	5.0"	4.0"	4.0"	
		60	7.0"	6.0"	6.0"	6.0"	6.0"	6.0"	6.0"	6.0"	5.0"	5.0"	5.0"	5.0"	5.0"	5.0"	5.0"	5.0"	5.0"	5.0"	5.0"	4.0"	4.0"	4.0"	4.0"	4.0"	4.0"	4.0"	

NOTES:

1. APPROVED FOR USE ATTACHING GROMMET SCREENS & ALL TRACKS OR STUDDED ANGLE WITH 3/8" SIDEWALK BOLT
2. APPROVED FOR USE WITH 3/8" EYE BOLTS

FRANK L. BENNARDO, P.E.
PE# 0046549
STATE OF FLORIDA
PROFESSIONAL ENGINEER
10/20/2017
IF CHECKED, CERTIFYING P.E. APPEARS BELOW
FRANK L. BENNARDO, P.E.
46549
STATE OF FLORIDA

ENGINEERING EXPRESS®
CORPORATE OFFICE:
160 SW 12th AVE, SUITE 100
DEERFIELD BEACH, FL 33442
P: (954) 354-0660 F: (954) 354-0443
E: HELLO@ENGINEERINGEXPRESS.COM
ENGINEERINGEXPRESS.COM
CERT OF AUTH #9885

STORM SMART INDUSTRIES, INC.
6182 IDLEWILD STREET
FORT MYERS, FL
(239) 938-1000

STORM CATCHER WIND ABATEMENT SYSTEM FL11291.2 HVHZ
-
-, FL

REMARKS	DRWN	CHKD	DATE
INIT ISSUE	RWN	FLB	10/18/17

THIS DOCUMENT IS THE PROPERTY OF ENGINEERING EXPRESS, AND SHALL NOT BE REPRODUCED IN WHOLE OR PART WITHOUT WRITTEN CONSENT OF ENGINEERING EXPRESS. ALTERATIONS, ADDITIONS, OR OTHER MARKINGS TO THIS DOCUMENT ARE NOT PERMITTED AND INVALIDATE OUR CERTIFICATION.

COPYRIGHT ENGINEERING EXPRESS ®

16-3080

SCALE: NTS UNLESS NOTED

V:\Projects\16-3080 Storm Catcher Wind Abatement System FL11291-R4\WP\2017 FBC Update\16-3080e-Dwg-11291.2.dwg
10/20/2017 - 3:07pm zachr

½" POWERS HOLLOW-SET

TABLE 7 - CONCRETE

HOST STRUCT.	ANCHOR TYPE	LOAD (psf)	SPANS 0" ≤ 3'	SPANS 3' ≤ 3'-6"	SPANS 3'-7" ≤ 4'	SPANS 4' ≤ 4'-6"	SPANS 4'-7" ≤ 5'	SPANS 5' ≤ 5'-6"	SPANS 5'-7" ≤ 6'	SPANS 6' ≤ 6'-6"	SPANS 6'-7" ≤ 7'	SPANS 7' ≤ 7'-6"	SPANS 7'-7" ≤ 8'	SPANS 8' ≤ 8'-6"	SPANS 8'-7" ≤ 9'	SPANS 9' ≤ 9'-6"	SPANS 9'-7" ≤ 10'	SPANS 10' ≤ 10'-6"	SPANS 10'-7" ≤ 11'	SPANS 11' ≤ 11'-6"	SPANS 11'-7" ≤ 12'	SPANS 12' ≤ 12'-6"	SPANS 12'-7" ≤ 13'	SPANS 13' ≤ 13'-6"	SPANS 13'-7" ≤ 14'	SPANS 14' ≤ 14'-6"	SPANS 14'-7" ≤ 15'	SPANS 15' ≤ 15'-6"	SPANS 15'-7" ≤ 16'
			3-1/2" MIN EDGE DISTANCE																									
CONCRETE	1/2" POWERS HOLLOW-SET 2" EMBEDMENT (2000 PSI CONC)	30	12.0"	12.0"	12.0"	12.0"	12.0"	12.0"	12.0"	12.0"	12.0"	12.0"	12.0"	12.0"	12.0"	12.0"	12.0"	12.0"	12.0"	12.0"	12.0"	12.0"	12.0"	11.0"	11.0"	11.0"	10.0"	10.0"
		35	12.0"	12.0"	12.0"	12.0"	12.0"	12.0"	12.0"	12.0"	12.0"	12.0"	12.0"	12.0"	12.0"	12.0"	12.0"	12.0"	12.0"	11.0"	11.0"	11.0"	10.0"	10.0"	10.0"	10.0"	9.0"	9.0"
		40	12.0"	12.0"	12.0"	12.0"	12.0"	12.0"	12.0"	12.0"	12.0"	12.0"	12.0"	12.0"	12.0"	12.0"	11.0"	11.0"	11.0"	10.0"	10.0"	10.0"	9.0"	9.0"	9.0"	9.0"	8.0"	8.0"
		45	12.0"	12.0"	12.0"	12.0"	12.0"	12.0"	12.0"	12.0"	12.0"	12.0"	12.0"	12.0"	12.0"	11.0"	11.0"	10.0"	10.0"	10.0"	9.0"	9.0"	9.0"	9.0"	8.0"	8.0"	8.0"	7.0"
		50	12.0"	12.0"	12.0"	12.0"	12.0"	12.0"	12.0"	12.0"	12.0"	12.0"	12.0"	11.0"	11.0"	10.0"	10.0"	10.0"	9.0"	9.0"	9.0"	8.0"	8.0"	8.0"	8.0"	7.0"	7.0"	7.0"
		55	12.0"	12.0"	12.0"	12.0"	12.0"	12.0"	12.0"	12.0"	12.0"	11.0"	11.0"	10.0"	10.0"	10.0"	9.0"	9.0"	9.0"	8.0"	8.0"	8.0"	7.0"	7.0"	7.0"	7.0"	6.0"	6.0"
		60	12.0"	12.0"	12.0"	12.0"	12.0"	12.0"	12.0"	12.0"	11.0"	11.0"	10.0"	10.0"	9.0"	9.0"	9.0"	8.0"	8.0"	8.0"	7.0"	7.0"	7.0"	7.0"	7.0"	6.0"	6.0"	6.0"
		65	12.0"	12.0"	12.0"	12.0"	12.0"	12.0"	12.0"	11.0"	11.0"	10.0"	10.0"	9.0"	9.0"	8.0"	8.0"	8.0"	7.0"	7.0"	7.0"	7.0"	6.0"	6.0"	6.0"	6.0"	6.0"	6.0"
		70	12.0"	12.0"	12.0"	12.0"	12.0"	12.0"	11.0"	11.0"	10.0"	10.0"	9.0"	9.0"	8.0"	8.0"	8.0"	7.0"	7.0"	7.0"	7.0"	6.0"	6.0"	6.0"	6.0"	6.0"	5.0"	5.0"
		75	12.0"	12.0"	12.0"	12.0"	12.0"	11.0"	11.0"	10.0"	10.0"	9.0"	9.0"	8.0"	8.0"	8.0"	7.0"	7.0"	7.0"	6.0"	6.0"	6.0"	6.0"	5.0"	5.0"	5.0"	5.0"	5.0"
		80	12.0"	12.0"	12.0"	12.0"	12.0"	11.0"	10.0"	10.0"	9.0"	9.0"	8.0"	8.0"	7.0"	7.0"	7.0"	7.0"	6.0"	6.0"	6.0"	6.0"	6.0"	5.0"	5.0"	5.0"	5.0"	5.0"
		85	12.0"	12.0"	12.0"	12.0"	11.0"	10.0"	10.0"	9.0"	9.0"	8.0"	8.0"	7.0"	7.0"	7.0"	7.0"	6.0"	6.0"	6.0"	6.0"	5.0"	5.0"	5.0"	5.0"	5.0"	5.0"	
		90	12.0"	12.0"	12.0"	12.0"	11.0"	10.0"	9.0"	9.0"	8.0"	8.0"	7.0"	7.0"	6.0"	6.0"	6.0"	6.0"	5.0"	5.0"	5.0"	5.0"	5.0"					
		95	12.0"	12.0"	12.0"	11.0"	10.0"	10.0"	9.0"	8.0"	8.0"	8.0"	7.0"	7.0"	6.0"	6.0"	6.0"	6.0"	5.0"	5.0"	5.0"	5.0"	5.0"	5.0"				
		100	12.0"	12.0"	12.0"	11.0"	10.0"	9.0"	9.0"	8.0"	8.0"	7.0"	7.0"	7.0"	6.0"	6.0"	6.0"	5.0"	5.0"	5.0"	5.0"	5.0"	5.0"					
		105	12.0"	12.0"	11.0"	10.0"	10.0"	9.0"	8.0"	8.0"	7.0"	7.0"	7.0"	6.0"	6.0"	6.0"	5.0"	5.0"	5.0"	5.0"	5.0"	5.0"						
		110	12.0"	12.0"	11.0"	10.0"	9.0"	9.0"	8.0"	7.0"	7.0"	7.0"	6.0"	6.0"	6.0"	5.0"	5.0"	5.0"	5.0"	5.0"	5.0"							
		115	12.0"	12.0"	11.0"	10.0"	9.0"	8.0"	8.0"	7.0"	7.0"	6.0"	6.0"	6.0"	6.0"	5.0"	5.0"	5.0"	5.0"	5.0"								
		120	12.0"	11.0"	10.0"	9.0"	9.0"	8.0"	7.0"	7.0"	7.0"	6.0"	6.0"	6.0"	5.0"	5.0"	5.0"	5.0"	5.0"									
		125	12.0"	11.0"	10.0"	9.0"	8.0"	8.0"	7.0"	7.0"	6.0"	6.0"	6.0"	5.0"	5.0"	5.0"	5.0"	5.0"										
		130	12.0"	11.0"	10.0"	9.0"	8.0"	7.0"	7.0"	7.0"	6.0"	6.0"	6.0"	5.0"	5.0"	5.0"	5.0"											
			3-1/2" MIN EDGE DISTANCE																									
CONCRETE	1/2" POWERS HOLLOW-SET 2" EMBEDMENT (4000 PSI CONC)	30	12.0"	12.0"	12.0"	12.0"	12.0"	12.0"	12.0"	12.0"	12.0"	12.0"	12.0"	12.0"	12.0"	12.0"	12.0"	12.0"	12.0"	12.0"	12.0"	12.0"	12.0"	12.0"	12.0"	12.0"	11.0"	11.0"
		35	12.0"	12.0"	12.0"	12.0"	12.0"	12.0"	12.0"	12.0"	12.0"	12.0"	12.0"	12.0"	12.0"	12.0"	12.0"	12.0"	12.0"	12.0"	12.0"	11.0"	11.0"	11.0"	11.0"	10.0"	10.0"	10.0"
		40	12.0"	12.0"	12.0"	12.0"	12.0"	12.0"	12.0"	12.0"	12.0"	12.0"	12.0"	12.0"	12.0"	12.0"	12.0"	12.0"	11.0"	11.0"	11.0"	10.0"	10.0"	10.0"	10.0"	9.0"	9.0"	9.0"
		45	12.0"	12.0"	12.0"	12.0"	12.0"	12.0"	12.0"	12.0"	12.0"	12.0"	12.0"	12.0"	12.0"	12.0"	11.0"	11.0"	10.0"	10.0"	10.0"	9.0"	9.0"	9.0"	9.0"	9.0"	8.0"	8.0"
		50	12.0"	12.0"	12.0"	12.0"	12.0"	12.0"	12.0"	12.0"	12.0"	12.0"	12.0"	12.0"	12.0"	11.0"	11.0"	10.0"	10.0"	10.0"	9.0"	9.0"	9.0"	9.0"	8.0"	8.0"	8.0"	8.0"
		55	12.0"	12.0"	12.0"	12.0"	12.0"	12.0"	12.0"	12.0"	12.0"	12.0"	11.0"	11.0"	10.0"	10.0"	10.0"	10.0"	9.0"	9.0"	9.0"	8.0"	8.0"	8.0"	8.0"	7.0"	7.0"	7.0"
		60	12.0"	12.0"	12.0"	12.0"	12.0"	12.0"	12.0"	12.0"	12.0"	11.0"	11.0"	10.0"	10.0"	9.0"	9.0"	9.0"	8.0"	8.0"	8.0"	8.0"	7.0"	7.0"	7.0"	7.0"	7.0"	7.0"
		65	12.0"	12.0"	12.0"	12.0"	12.0"	12.0"	12.0"	12.0"	11.0"	11.0"	10.0"	10.0"	9.0"	9.0"	9.0"	8.0"	8.0"	8.0"	8.0"	7.0"	7.0"	7.0"	7.0"	7.0"	6.0"	6.0"
		70	12.0"	12.0"	12.0"	12.0"	12.0"	12.0"	12.0"	11.0"	11.0"	10.0"	10.0"	9.0"	9.0"	9.0"	8.0"	8.0"	8.0"	7.0"	7.0"	7.0"	7.0"	6.0"	6.0"	6.0"	6.0"	6.0"
		75	12.0"	12.0"	12.0"	12.0"	12.0"	12.0"	12.0"	11.0"	10.0"	10.0"	9.0"	9.0"	9.0"	8.0"	8.0"	8.0"	7.0"	7.0"	7.0"	7.0"	6.0"	6.0"	6.0"	6.0"	6.0"	5.0"
		80	12.0"	12.0"	12.0"	12.0"	12.0"	12.0"	11.0"	10.0"	10.0"	9.0"	9.0"	8.0"	8.0"	8.0"	8.0"	7.0"	7.0"	7.0"	7.0"	6.0"	6.0"	6.0"	6.0"	6.0"	5.0"	5.0"
		85	12.0"	12.0"	12.0"	12.0"	12.0"	11.0"	11.0"	10.0"	9.0"	9.0"	8.0"	8.0"	8.0"	7.0"	7.0"	7.0"	7.0"	6.0"	6.0"	6.0"	6.0"	6.0"	5.0"	5.0"	5.0"	5.0"
		90	12.0"	12.0"	12.0"	12.0"	12.0"	11.0"	10.0"	9.0"	9.0"	9.0"	8.0"	8.0"	7.0"	7.0"	7.0"	7.0"	6.0"	6.0"	6.0"	6.0"	6.0"	5.0"	5.0"	5.0"	5.0"	5.0"
		95	12.0"	12.0"	12.0"	12.0"	11.0"	10.0"	10.0"	9.0"	9.0"	8.0"	8.0"	7.0"	7.0"	7.0"	7.0"	6.0"	6.0"	6.0"	6.0"	6.0"	5.0"	5.0"	5.0"	5.0"	5.0"	5.0"
		100	12.0"	12.0"	12.0"	12.0"	11.0"	10.0"	9.0"	9.0"	8.0"	8.0"	8.0"	7.0"	7.0"	7.0"	6.0"	6.0"	6.0"	6.0"	5.0"	5.0"	5.0"	5.0"	5.0"	5.0"		
		105	12.0"	12.0"	12.0"	11.0"	10.0"	10.0"	9.0"	8.0"	8.0"	8.0"	7.0"	7.0"	7.0"	6.0"	6.0"	6.0"	6.0"	5.0"	5.0"	5.0"	5.0"	5.0"	5.0"			
		110	12.0"	12.0"	12.0"	11.0"	10.0"	9.0"	9.0"	8.0"	8.0"	7.0"	7.0"	7.0"	6.0"	6.0"	6.0"	6.0"	5.0"	5.0"	5.0"	5.0"	5.0"	5.0"				
		115	12.0"	12.0"	11.0"	10.0"	10.0"	9.0"	8.0"	8.0"	7.0"	7.0"	7.0"	6.0"	6.0"	6.0"	6.0"	5.0"	5.0"	5.0"	5.0"	5.0"						
		120	12.0"	12.0"	11.0"	10.0"	9.0"	9.0"	8.0"	8.0"	7.0"	7.0"	7.0"	6.0"	6.0"	6.0"	5.0"	5.0"	5.0"	5.0"	5.0"							
		125	12.0"	12.0"	11.0"	10.0"	9.0"	8.0"	8.0"	7.0"	7.0"	7.0"	6.0"	6.0"	6.0"	6.0"	5.0"	5.0"	5.0"	5.0"	5.0"	5.0"						
		130	12.0"	11.0"	10.0"	9.0"	9.0"	8.0"	8.0"	7.0"	7.0"	6.0"	6.0"	6.0"	6.0"	5.0"	5.0"	5.0"	5.0"	5.0"								

HOST STRUCT.	ANCHOR TYPE	LOAD (psf)	SPANS 16' ≤ 16'-6"	SPANS 16'-7" ≤ 17'	SPANS 17' ≤ 17'-6"	SPANS 17'-7" ≤ 18'	SPANS 18' ≤ 18'-6"	SPANS 18'-7" ≤ 19'	SPANS 19' ≤ 19'-6"	SPANS 19'-7" ≤ 20'	SPANS 20' ≤ 20'-6"	SPANS 20'-7" ≤ 21'	SPANS 21' ≤ 21'-6"	SPANS 21'-7" ≤ 22'	SPANS 22' ≤ 22'-6"	SPANS 22'-7" ≤ 23'	SPANS 23' ≤ 23'-6"	SPANS 23'-7" ≤ 24'	SPANS 24' ≤ 24'-6"	SPANS 24'-7" ≤ 25'	SPANS 25' ≤ 25'-6"	SPANS 25'-7" ≤ 26'	SPANS 26' ≤ 26'-6"	SPANS 26'-7" ≤ 27'	SPANS 27' ≤ 27'-6"	SPANS 27'-7" ≤ 28'	SPANS 28' ≤ 28'-6"	SPANS 28'-7" ≤ 29'	SPANS 29' ≤ 29'-6"	SPANS 29'-7" ≤ 30'
			3-1/2" MIN EDGE DISTANCE																										
CONCRETE	1/2" POWERS HOLLOW-SET 2" EMBEDMENT (2000 PSI CONC)	30	10.0"	10.0"	10.0"	9.0"	9.0"	9.0"	9.0"	9.0"	8.0"	8.0"	8.0"	8.0"	8.0"	8.0"	8.0"	7.0"	7.0"	7.0"	7.0"	7.0"	7.0"	7.0"	7.0"	7.0"	7.0"	7.0"	7.0"
		35	9.0"	9.0"	8.0"	8.0"	8.0"	8.0"	8.0"	8.0"	7.0"	7.0"	7.0"	7.0"	7.0"	7.0"	7.0"	7.0"	6.0"	6.0"	6.0"	6.0"	6.0"	6.0"	6.0"	6.0"	6.0"	6.0"	6.0"
		40	8.0"	8.0"	8.0"	7.0"	7.0"	7.0"	7.0"	7.0"	7.0"	7.0"	6.0"	6.0"	6.0"	6.0"	6.0"	6.0"	6.0"	6.0"	6.0"	6.0"	6.0"	5.0"	5.0"	5.0"	5.0"	5.0"	5.0"
		45	7.0"	7.0"	7.0"	7.0"	7.0"	6.0"	6.0"	6.0"	6.0"	6.0"	6.0"	6.0"	6.0"	6.0"	5.0"	5.0"	5.0"	5.0"	5.0"	5.0"	5.0"	5.0"	5.0"	5.0"	5.0"	5.0"	5.0"
		50	7.0"	7.0"	6.0"	6.0"	6.0"	6.0"	6.0"	6.0"	6.0"	5.0"	5.0"	5.0"	5.0"	5.0"	5.0"	5.0"	5.0"	5.0"	5.0"	5.0"	5.0"	5.0"					
		55	6.0"	6.0"	6.0"	6.0"	6.0"	5.0"	5.0"	5.0"	5.0"	5.0"	5.0"	5.0"	5.0"	5.0"	5.0"	5.0"											
		60	6.0"	6.0"	5.0"	5.0"	5.0"	5.0"	5.0"	5.0"	5.0"	5.0"	5.0"	5.0"															
			3-1/2" MIN EDGE DISTANCE																										
CONCRETE	1/2" POWERS HOLLOW-SET 2" EMBEDMENT (4000 PSI CONC)	30	11.0"	11.0"	10.0"	10.0"	10.0"	10.0"	9.0"	9.0"	9.0"	9.0"	9.0"	9.0"	9.0"	8.0"	8.0"	8.0"	8.0"	8.0"	8.0"	8.0"	8.0"	8.0"	8.0"	7.0"	7.0"	7.0"	7.0"
		35	10.0"	9.0"	9.0"	9.0"	9.0"	9.0"	8.0"	8.0"	8.0"	8.0"	8.0"	8.0"	8.0"	7.0"	7.0"	7.0"	7.0"	7.0"	7.0"	7.0"	7.0"	7.0"	7.0"	7.0"	7.0"	7.0"	6.0"
		40	9.0"	8.0"	8.0"	8.0"	8.0"	8.0"	8.0"	7.0"	7.0"	7.0"	7.0"	7.0"	7.0"	7.0"	7.0"	6.0"	6.0"	6.0"	6.0"	6.0"	6.0"	6.0"	6.0"	6.0"	6.0"	6.0"	6.0"
		45	8.0"	8.0"	8.0"	7.0"	7.0"	7.0"	7.0"	7.0"	7.0"	7.0"	7.0"	6.0"	6.0"	6.0"	6.0"	6.0"	6.0"	6.0"	6.0"	6.0"	6.0"	6.0"	5.0"	5.0"	5.0"	5.0"	5.0"
		50	7.0"	7.0"	7.0"	7.0"	7.0"	7.0"	6.0"	6.0"	6.0"	6.0"	6.0"	6.0"	6.0"	6.0"	5.0"	5.0"	5.0"	5.0"	5.0"	5.0"	5.0"	5.0"	5.0"	5.0"	5.0"	5.0"	5.0"
		55	7.0"	7.0"	7.0"	6.0"	6.0"	6.0"	6.0"	6.0"	6.0"	6.0"	6.0"	5.0"	5.0"	5.0"	5.0"	5.0"	5.0"	5.0"	5.0"	5.0"	5.0"	5.0"	5.0"	5.0"	5.0"	5.0"	5.0"
		60	6.0"	6.0"	6.0"	6.0"	6.0"	6.0"	6.0"	5.0"	5.0"	5.0"	5.0"	5.0"	5.0"	5.0"	5.0"	5.0"	5.0"	5.0"	5.0"	5.0"	5.0"						

NOTES:

1. APPROVED FOR USE ATTACHING GROMMET SCREENS & ALL TRACKS OR STUDDED ANGLE WITH ½" SIDEWALK BOLT & ½" EYEBOLTS

FRANK L. BENNARDO, P.E.
PE#0046549
10/20/2017
IF CHECKED, CERTIFYING P.E. MYERS BELOW
FRANK L. BENNARDO, P.E. 46549
STATE OF FLORIDA
ENGINEERING EXPRESS
CORPORATE OFFICE:
160 SW 12th AVE, SUITE 106
DEERFIELD BEACH, FL 33442
P: (954) 354-0660 F: (954) 354-0443
E: HELLO@ENGINEERINGEXPRESS.COM
ENGINEERINGEXPRESS.COM
CERT OF AUTH #9885

STORM SMART INDUSTRIES, INC.
6182 IDLEWILD STREET
FORT MYERS, FL
(239) 938-1000

STORM CATCHER WIND ABATEMENT SYSTEM FL11291.2 HVHZ
-
-, FL

REMARKS	DRWN	CHKD	DATE
INIT ISSUE	RWN	FLB	10/18/17

THIS DOCUMENT IS THE PROPERTY OF ENGINEERING EXPRESS, AND SHALL NOT BE REPRODUCED IN WHOLE OR PART WITHOUT WRITTEN CONSENT OF ENGINEERING EXPRESS. ALTERATIONS, ADDITIONS, OR OTHER MARKINGS TO THIS DOCUMENT ARE NOT PERMITTED AND INVALIDATE OUR CERTIFICATION.

COPYRIGHT ENGINEERING EXPRESS ®

16-3080

SCALE: NTS UNLESS NOTED

10/20/2017 - 3:07pm zachr V:\Projects\16-3080 Storm Catcher Wind Abatement System FL11291-R4\WP\2017 FBC Update\16-3080e-Dwg-11291.2.dwg

3/8" POWERS HOLLOW-SET

TABLE 8 - CONCRETE

HOST STRUCT.	ANCHOR TYPE	LOAD (psf)	SPANS 0" ≤ 3'	SPANS 3' ≤ 3'-6"	SPANS 3'-7" ≤ 4'	SPANS 4' ≤ 4'-6"	SPANS 4'-7" ≤ 5'	SPANS 5' ≤ 5'-6"	SPANS 5'-7" ≤ 6'	SPANS 6' ≤ 6'-6"	SPANS 6'-7" ≤ 7'	SPANS 7' ≤ 7'-6"	SPANS 7'-7" ≤ 8'	SPANS 8' ≤ 8'-6"	SPANS 8'-7" ≤ 9'	SPANS 9' ≤ 9'-6"	SPANS 9'-7" ≤ 10'	SPANS 10' ≤ 10'-6"	SPANS 10'-7" ≤ 11'	SPANS 11' ≤ 11'-6"	SPANS 11'-7" ≤ 12'	SPANS 12' ≤ 12'-6"	SPANS 12'-7" ≤ 13'	SPANS 13' ≤ 13'-6"	SPANS 13'-7" ≤ 14'	SPANS 14' ≤ 14'-6"	SPANS 14'-7" ≤ 15'	SPANS 15' ≤ 15'-6"	SPANS 15'-7" ≤ 16'
			3" MIN EDGE DISTANCE																									
CONCRETE	3/8" POWERS HOLLOW-SET 1 1/2" EMBEDMENT (2000 PSI CONC)	30	12.0"	12.0"	12.0"	12.0"	12.0"	12.0"	12.0"	12.0"	12.0"	12.0"	12.0"	12.0"	12.0"	12.0"	12.0"	11.0"	11.0"	10.0"	10.0"	10.0"	9.0"	9.0"	9.0"	9.0"	8.0"	8.0"	8.0"
		35	12.0"	12.0"	12.0"	12.0"	12.0"	12.0"	12.0"	12.0"	12.0"	12.0"	12.0"	12.0"	11.0"	11.0"	10.0"	10.0"	10.0"	9.0"	9.0"	9.0"	8.0"	8.0"	8.0"	8.0"	8.0"	7.0"	7.0"
		40	12.0"	12.0"	12.0"	12.0"	12.0"	12.0"	12.0"	12.0"	12.0"	12.0"	11.0"	11.0"	10.0"	10.0"	9.0"	9.0"	9.0"	8.0"	8.0"	8.0"	8.0"	7.0"	7.0"	7.0"	7.0"	7.0"	6.0"
		45	12.0"	12.0"	12.0"	12.0"	12.0"	12.0"	12.0"	12.0"	11.0"	11.0"	10.0"	10.0"	9.0"	9.0"	8.0"	8.0"	8.0"	8.0"	7.0"	7.0"	7.0"	7.0"	7.0"	6.0"	6.0"	6.0"	6.0"
		50	12.0"	12.0"	12.0"	12.0"	12.0"	12.0"	12.0"	11.0"	10.0"	10.0"	9.0"	9.0"	8.0"	8.0"	8.0"	8.0"	7.0"	7.0"	7.0"	7.0"	6.0"	6.0"	6.0"	6.0"	6.0"	6.0"	5.0"
		55	12.0"	12.0"	12.0"	12.0"	12.0"	11.0"	11.0"	10.0"	10.0"	9.0"	9.0"	8.0"	8.0"	8.0"	7.0"	7.0"	7.0"	7.0"	6.0"	6.0"	6.0"	6.0"	6.0"	5.0"	5.0"	5.0"	5.0"
		60	12.0"	12.0"	12.0"	12.0"	12.0"	11.0"	10.0"	9.0"	9.0"	8.0"	8.0"	8.0"	7.0"	7.0"	7.0"	7.0"	6.0"	6.0"	6.0"	6.0"	6.0"	5.0"	5.0"	5.0"	5.0"	5.0"	5.0"
		65	12.0"	12.0"	12.0"	12.0"	11.0"	10.0"	9.0"	9.0"	8.0"	8.0"	8.0"	7.0"	7.0"	7.0"	6.0"	6.0"	6.0"	6.0"	6.0"	6.0"	5.0"	5.0"	5.0"	5.0"	5.0"	4.0"	4.0"
		70	12.0"	12.0"	12.0"	11.0"	10.0"	10.0"	9.0"	8.0"	8.0"	8.0"	7.0"	7.0"	7.0"	6.0"	6.0"	6.0"	6.0"	5.0"	5.0"	5.0"	5.0"	5.0"	5.0"	4.0"	4.0"	4.0"	4.0"
		75	12.0"	12.0"	12.0"	11.0"	10.0"	9.0"	8.0"	8.0"	8.0"	7.0"	7.0"	6.0"	6.0"	6.0"	6.0"	5.0"	5.0"	5.0"	5.0"	5.0"	5.0"	4.0"	4.0"	4.0"	4.0"	4.0"	4.0"
		80	12.0"	12.0"	11.0"	10.0"	9.0"	9.0"	8.0"	8.0"	7.0"	7.0"	6.0"	6.0"	6.0"	6.0"	5.0"	5.0"	5.0"	5.0"	5.0"	5.0"	4.0"	4.0"	4.0"	4.0"	4.0"	4.0"	4.0"
		85	12.0"	12.0"	11.0"	10.0"	9.0"	8.0"	8.0"	7.0"	7.0"	6.0"	6.0"	6.0"	6.0"	5.0"	5.0"	5.0"	5.0"	5.0"	4.0"	4.0"	4.0"	4.0"	4.0"	4.0"	4.0"		
		90	12.0"	11.0"	10.0"	9.0"	8.0"	8.0"	7.0"	7.0"	7.0"	6.0"	6.0"	6.0"	5.0"	5.0"	5.0"	5.0"	5.0"	5.0"	5.0"	4.0"	4.0"	4.0"	4.0"	4.0"			
		95	12.0"	11.0"	10.0"	9.0"	8.0"	8.0"	7.0"	7.0"	6.0"	6.0"	6.0"	5.0"	5.0"	5.0"	5.0"	5.0"	4.0"	4.0"	4.0"	4.0"	4.0"	4.0"	4.0"				
		100	12.0"	10.0"	9.0"	8.0"	8.0"	7.0"	7.0"	6.0"	6.0"	6.0"	5.0"	5.0"	5.0"	5.0"	5.0"	4.0"	4.0"	4.0"	4.0"	4.0"	4.0"						
		105	11.6"	10.0"	9.0"	8.0"	8.0"	7.0"	7.0"	6.0"	6.0"	5.0"	5.0"	5.0"	5.0"	5.0"	4.0"	4.0"	4.0"	4.0"	4.0"	4.0"							
		110	11.2"	10.0"	9.0"	8.0"	7.0"	7.0"	6.0"	6.0"	6.0"	5.0"	5.0"	5.0"	5.0"	4.0"	4.0"	4.0"	4.0"	4.0"	4.0"								
		115	10.9"	9.0"	8.0"	8.0"	7.0"	7.0"	6.0"	6.0"	5.0"	5.0"	5.0"	5.0"	4.0"	4.0"	4.0"	4.0"	4.0"	4.0"	4.0"								
		120	10.6"	9.0"	8.0"	7.0"	7.0"	6.0"	6.0"	6.0"	5.0"	5.0"	5.0"	4.0"	4.0"	4.0"	4.0"	4.0"	4.0"										
		125	10.3"	9.0"	8.0"	7.0"	7.0"	6.0"	6.0"	5.0"	5.0"	5.0"	5.0"	4.0"	4.0"	4.0"	4.0"	4.0"											
		130	10.0"	8.0"	8.0"	7.0"	6.0"	6.0"	6.0"	5.0"	5.0"	5.0"	4.0"	4.0"	4.0"	4.0"	4.0"												
			3" MIN EDGE DISTANCE																									
	3/8" POWERS HOLLOW-SET 1 1/2" EMBEDMENT (4000 PSI CONC)	30	12.0"	12.0"	12.0"	12.0"	12.0"	12.0"	12.0"	12.0"	12.0"	12.0"	12.0"	12.0"	12.0"	12.0"	12.0"	11.0"	11.0"	11.0"	10.0"	10.0"	10.0"	9.0"	9.0"	9.0"	9.0"	8.0"	8.0"
		35	12.0"	12.0"	12.0"	12.0"	12.0"	12.0"	12.0"	12.0"	12.0"	12.0"	12.0"	12.0"	11.0"	11.0"	10.0"	10.0"	10.0"	9.0"	9.0"	9.0"	9.0"	8.0"	8.0"	8.0"	8.0"	8.0"	7.0"
		40	12.0"	12.0"	12.0"	12.0"	12.0"	12.0"	12.0"	12.0"	12.0"	12.0"	11.0"	11.0"	10.0"	10.0"	9.0"	9.0"	9.0"	9.0"	8.0"	8.0"	8.0"	8.0"	7.0"	7.0"	7.0"	7.0"	7.0"
		45	12.0"	12.0"	12.0"	12.0"	12.0"	12.0"	12.0"	12.0"	11.0"	11.0"	10.0"	10.0"	9.0"	9.0"	9.0"	8.0"	8.0"	8.0"	8.0"	7.0"	7.0"	7.0"	7.0"	6.0"	6.0"	6.0"	6.0"
		50	12.0"	12.0"	12.0"	12.0"	12.0"	12.0"	12.0"	11.0"	10.0"	10.0"	9.0"	9.0"	9.0"	8.0"	8.0"	8.0"	7.0"	7.0"	7.0"	7.0"	7.0"	6.0"	6.0"	6.0"	6.0"	6.0"	6.0"
		55	12.0"	12.0"	12.0"	12.0"	12.0"	12.0"	11.0"	10.0"	10.0"	9.0"	9.0"	8.0"	8.0"	8.0"	7.0"	7.0"	7.0"	6.0"	6.0"	6.0"	6.0"	6.0"	6.0"	5.0"	5.0"	5.0"	5.0"
		60	12.0"	12.0"	12.0"	12.0"	12.0"	11.0"	10.0"	10.0"	9.0"	9.0"	8.0"	8.0"	8.0"	7.0"	7.0"	7.0"	6.0"	6.0"	6.0"	6.0"	6.0"	6.0"	5.0"	5.0"	5.0"	5.0"	5.0"
		65	12.0"	12.0"	12.0"	12.0"	11.0"	10.0"	10.0"	9.0"	9.0"	8.0"	8.0"	7.0"	7.0"	7.0"	7.0"	6.0"	6.0"	6.0"	6.0"	6.0"	5.0"	5.0"	5.0"	5.0"	5.0"	5.0"	5.0"
		70	12.0"	12.0"	12.0"	11.0"	10.0"	10.0"	9.0"	9.0"	8.0"	8.0"	7.0"	7.0"	7.0"	6.0"	6.0"	6.0"	6.0"	6.0"	5.0"	5.0"	5.0"	5.0"	5.0"	4.0"	4.0"	4.0"	4.0"
		75	12.0"	12.0"	12.0"	11.0"	10.0"	9.0"	9.0"	8.0"	8.0"	7.0"	7.0"	7.0"	6.0"	6.0"	6.0"	6.0"	5.0"	5.0"	5.0"	5.0"	5.0"	5.0"	4.0"	4.0"	4.0"	4.0"	4.0"
		80	12.0"	12.0"	11.0"	10.0"	9.0"	9.0"	8.0"	8.0"	7.0"	7.0"	7.0"	6.0"	6.0"	6.0"	6.0"	5.0"	5.0"	5.0"	5.0"	5.0"	5.0"	4.0"	4.0"	4.0"	4.0"	4.0"	4.0"
		85	12.0"	12.0"	11.0"	10.0"	9.0"	8.0"	8.0"	7.0"	7.0"	7.0"	6.0"	6.0"	6.0"	6.0"	5.0"	5.0"	5.0"	5.0"	5.0"	4.0"	4.0"	4.0"	4.0"	4.0"	4.0"	4.0"	4.0"
		90	12.0"	11.0"	10.0"	9.0"	9.0"	8.0"	8.0"	7.0"	7.0"	6.0"	6.0"	6.0"	6.0"	5.0"	5.0"	5.0"	5.0"	5.0"	4.0"	4.0"	4.0"	4.0"	4.0"	4.0"	4.0"		
		95	12.0"	11.0"	10.0"	9.0"	8.0"	8.0"	7.0"	7.0"	6.0"	6.0"	6.0"	6.0"	5.0"	5.0"	5.0"	5.0"	4.0"	4.0"	4.0"	4.0"	4.0"	4.0"	4.0"	4.0"			
		100	12.0"	10.0"	9.0"	9.0"	8.0"	7.0"	7.0"	7.0"	6.0"	6.0"	6.0"	5.0"	5.0"	5.0"	5.0"	4.0"	4.0"	4.0"	4.0"	4.0"	4.0"	4.0"	4.0"				
		105	11.8"	10.0"	9.0"	8.0"	8.0"	7.0"	7.0"	6.0"	6.0"	6.0"	5.0"	5.0"	5.0"	5.0"	4.0"	4.0"	4.0"	4.0"	4.0"	4.0"	4.0"						
		110	11.4"	10.0"	9.0"	8.0"	7.0"	7.0"	6.0"	6.0"	6.0"	5.0"	5.0"	5.0"	5.0"	4.0"	4.0"	4.0"	4.0"	4.0"	4.0"	4.0"							
		115	11.1"	9.0"	9.0"	8.0"	7.0"	7.0"	6.0"	6.0"	6.0"	5.0"	5.0"	5.0"	5.0"	4.0"	4.0"	4.0"	4.0"	4.0"	4.0"								
		120	10.8"	9.0"	8.0"	8.0"	7.0"	6.0"	6.0"	6.0"	5.0"	5.0"	5.0"	5.0"	4.0"	4.0"	4.0"	4.0"	4.0"	4.0"									
		125	10.5"	9.0"	8.0"	7.0"	7.0"	6.0"	6.0"	5.0"	5.0"	5.0"	5.0"	4.0"	4.0"	4.0"	4.0"	4.0"	4.0"										
		130	10.2"	9.0"	8.0"	7.0"	7.0"	6.0"	6.0"	5.0"	5.0"	5.0"	5.0"	4.0"	4.0"	4.0"	4.0"	4.0"											

HOST STRUCT.	ANCHOR TYPE	LOAD (psf)	SPANS 16' ≤ 16'-6"	SPANS 16'-7" ≤ 17'	SPANS 17' ≤ 17'-6"	SPANS 17'-7" ≤ 18'	SPANS 18' ≤ 18'-6"	SPANS 18'-7" ≤ 19'	SPANS 19' ≤ 19'-6"	SPANS 19'-7" ≤ 20'	SPANS 20' ≤ 20'-6"	SPANS 20'-7" ≤ 21'	SPANS 21' ≤ 21'-6"	SPANS 21'-7" ≤ 22'	SPANS 22' ≤ 22'-6"	SPANS 22'-7" ≤ 23'	SPANS 23' ≤ 23'-6"	SPANS 23'-7" ≤ 24'	SPANS 24' ≤ 24'-6"	SPANS 24'-7" ≤ 25'	SPANS 25' ≤ 25'-6"	SPANS 25'-7" ≤ 26'	SPANS 26' ≤ 26'-6"	SPANS 26'-7" ≤ 27'	SPANS 27' ≤ 27'-6"	SPANS 27'-7" ≤ 28'	SPANS 28' ≤ 28'-6"	SPANS 28'-7" ≤ 29'	SPANS 29' ≤ 29'-6"	SPANS 29'-7" ≤ 30'
			5 1/4" MIN EDGE DISTANCE																										
CONCRETE	3/8" POWERS HOLLOW-SET 1 1/2" EMBEDMENT (2000 PSI CONC)	30	8.0"	8.0"	8.0"	7.0"	7.0"	7.0"	7.0"	7.0"	7.0"	7.0"	6.0"	6.0"	6.0"	6.0"	6.0"	6.0"	6.0"	6.0"	6.0"	6.0"	6.0"	5.0"	5.0"	5.0"	5.0"	5.0"	5.0"
		35	7.0"	7.0"	7.0"	7.0"	6.0"	6.0"	6.0"	6.0"	6.0"	6.0"	6.0"	6.0"	5.0"	5.0"	5.0"	5.0"	5.0"	5.0"	5.0"	5.0"	5.0"	5.0"	5.0"	5.0"	5.0"	5.0"	5.0"
		40	6.0"	6.0"	6.0"	6.0"	6.0"	6.0"	6.0"	5.0"	5.0"	5.0"	5.0"	5.0"	5.0"	5.0"	5.0"	5.0"	5.0"	5.0"	4.0"	4.0"	4.0"	4.0"	4.0"	4.0"	4.0"	4.0"	4.0"
		45	6.0"	6.0"	5.0"	5.0"	5.0"	5.0"	5.0"	5.0"	5.0"	5.0"	5.0"	5.0"	4.0"	4.0"	4.0"	4.0"	4.0"	4.0"	4.0"	4.0"	4.0"	4.0"	4.0"	4.0"	4.0"	4.0"	4.0"
		50	5.0"	5.0"	5.0"	5.0"	5.0"	5.0"	5.0"	4.0"	4.0"	4.0"	4.0"	4.0"	4.0"	4.0"	4.0"	4.0"	4.0"	4.0"	4.0"	4.0"	4.0"	4.0"	4.0"				
		55	5.0"	5.0"	5.0"	5.0"	4.0"	4.0"	4.0"	4.0"	4.0"	4.0"	4.0"	4.0"	4.0"	4.0"	4.0"	4.0"	4.0"										
		60	5.0"	4.0"	4.0"	4.0"	4.0"	4.0"	4.0"	4.0"	4.0"	4.0"	4.0"	4.0"															
			5 1/4" MIN EDGE DISTANCE																										
	3/8" POWERS HOLLOW-SET 1 1/2" EMBEDMENT (4000 PSI CONC)	30	8.0"	8.0"	8.0"	8.0"	7.0"	7.0"	7.0"	7.0"	7.0"	7.0"	7.0"	6.0"	6.0"	6.0"	6.0"	6.0"	6.0"	6.0"	6.0"	6.0"	6.0"	6.0"	6.0"	5.0"	5.0"	5.0"	5.0"
		35	7.0"	7.0"	7.0"	7.0"	7.0"	6.0"	6.0"	6.0"	6.0"	6.0"	6.0"	6.0"	6.0"	6.0"	5.0"	5.0"	5.0"	5.0"	5.0"	5.0"	5.0"	5.0"	5.0"	5.0"	5.0"	5.0"	5.0"
		40	6.0"	6.0"	6.0"	6.0"	6.0"	6.0"	6.0"	6.0"	5.0"	5.0"	5.0"	5.0"	5.0"	5.0"	5.0"	5.0"	5.0"	5.0"	5.0"	5.0"	5.0"	4.0"	4.0"	4.0"	4.0"	4.0"	4.0"
		45	6.0"	6.0"	6.0"	6.0"	5.0"	5.0"	5.0"	5.0"	5.0"	5.0"	5.0"	5.0"	5.0"	5.0"	4.0"	4.0"	4.0"	4.0"	4.0"	4.0"	4.0"	4.0"	4.0"	4.0"	4.0"	4.0"	4.0"
		50	5.0"	5.0"	5.0"	5.0"	5.0"	5.0"	5.0"	5.0"	5.0"	4.0"	4.0"	4.0"	4.0"	4.0"	4.0"	4.0"	4.0"	4.0"	4.0"	4.0"	4.0"	4.0"	4.0"	4.0"	4.0"	4.0"	4.0"
		55	5.0"	5.0"	5.0"	5.0"	5.0"	4.0"	4.0"	4.0"	4.0"	4.0"	4.0"	4.0"	4.0"	4.0"	4.0"	4.0"	4.0"	4.0"	4.0"								
		60	5.0"	5.0"	4.0"	4.0"	4.0"	4.0"	4.0"	4.0"	4.0"	4.0"	4.0"	4.0"	4.0"	4.0"													

NOTES:

1. APPROVED FOR USE WITH ATTACHING GROMMETS & ALL TRACKS OR STUDDED ANGLE WITH 3/8" SIDEWALK BOLT & 3/8" EYEBOLTS

FRANK L. BENNARDO, P.E.
PE# 0046549
10/20/2017
IF CHECKED, CERTIFICATE OF ANSWERS BELOW
FRANK L. BENNARDO, P.E.
46549

FRANK L. BENNARDO LICENSE No PE0046549 STATE OF FLORIDA PROFESSIONAL ENGINEER

ENGINEERING EXPRESS®
CORPORATE OFFICE:
160 SW 12th AVE, SUITE 106
DEERFIELD BEACH, FL 33442
P: (954) 354-0660 F: (954) 354-0443
E: HELLO@ENGINEERINGEXPRESS.COM
ENGINEERINGEXPRESS.COM
CERT OF AUTH #9885

STORM SMART INDUSTRIES, INC.
6182 IDLEWILD STREET
FORT MYERS , FL
(239) 938-1000

STORM CATCHER WIND ABATEMENT SYSTEM FL11291.2 HVHZ
-
-, FL

REMARKS	DRWN	CHKD	DATE
INIT ISSUE	RWN	FLB	10/18/17

THIS DOCUMENT IS THE PROPERTY OF ENGINEERING EXPRESS, AND SHALL NOT BE REPRODUCED IN WHOLE OR PART WITHOUT WRITTEN CONSENT OF ENGINEERING EXPRESS. ALTERATIONS, ADDITIONS, OR OTHER MARKINGS TO THIS DOCUMENT ARE NOT PERMITTED AND INVALIDATE OUR CERTIFICATION.

COPYRIGHT ENGINEERING EXPRESS®

16-3080

SCALE: NTS UNLESS NOTED

V:\Projects\16-3080 Storm Catcher Wind Abatement System FL11291-R4\WP\2017 FBC Update\16-3080e-Dwg-11291.2.dwg
10/20/2017 - 3:07pm zachr

¼" PANELMATE PRO, PLUS, TVAS & FEMALE & INSERT FOR SPANS 0' TO 16'

TABLE 9 - CONCRETE

HOST STRUCT.	ANCHOR TYPE	LOAD (psf)	SPANS 0" ≤ 3'	SPANS 3' ≤ 3'-6"	SPANS 3'-7" ≤ 4'	SPANS 4' ≤ 4'-6"	SPANS 4'-7" ≤ 5'	SPANS 5' ≤ 5'-6"	SPANS 5'-7" ≤ 6'	SPANS 6' ≤ 6'-6"	SPANS 6'-7" ≤ 7'	SPANS 7' ≤ 7'-6"	SPANS 7'-7" ≤ 8'	SPANS 8' ≤ 8'-6"	SPANS 8'-7" ≤ 9'	SPANS 9' ≤ 9'-6"	SPANS 9'-7" ≤ 10'	SPANS 10' ≤ 10'-6"	SPANS 10'-7" ≤ 11'	SPANS 11' ≤ 11'-6"	SPANS 11'-7" ≤ 12'	SPANS 12' ≤ 12'-6"	SPANS 12'-7" ≤ 13'	SPANS 13' ≤ 13'-6"	SPANS 13'-7" ≤ 14'	SPANS 14' ≤ 14'-6"	SPANS 14'-7" ≤ 15'	SPANS 15' ≤ 15'-6"	SPANS 15'-7" ≤ 16'
			2-1/2"" MIN EDGE DISTANCE																										
CONCRETE	#14-10 PANELMATE PRO, PLUS, TVAS 2" EMBEDMENT (3350 PSI CONC)	30	12.0"	12.0"	12.0"	12.0"	12.0"	12.0"	12.0"	12.0"	12.0"	12.0"	12.0"	12.0"	12.0"	11.0"	11.0"	10.0"	10.0"	10.0"	9.0"	9.0"	9.0"	9.0"	8.0"	8.0"	8.0"	8.0"	8.0"
		35	12.0"	12.0"	12.0"	12.0"	12.0"	12.0"	12.0"	12.0"	12.0"	12.0"	11.0"	11.0"	10.0"	10.0"	10.0"	9.0"	9.0"	9.0"	8.0"	8.0"	8.0"	8.0"	7.0"	7.0"	7.0"	7.0"	7.0"
		40	12.0"	12.0"	12.0"	12.0"	12.0"	12.0"	12.0"	12.0"	11.0"	11.0"	10.0"	10.0"	9.0"	9.0"	9.0"	8.0"	8.0"	8.0"	8.0"	7.0"	7.0"	7.0"	7.0"	7.0"	6.0"	6.0"	6.0"
		45	12.0"	12.0"	12.0"	12.0"	12.0"	12.0"	12.0"	11.0"	10.0"	10.0"	9.0"	9.0"	9.0"	8.0"	8.0"	8.0"	7.0"	7.0"	7.0"	7.0"	7.0"	6.0"	6.0"	6.0"	6.0"	6.0"	6.0"
		50	12.0"	12.0"	12.0"	12.0"	12.0"	11.0"	11.0"	10.0"	10.0"	9.0"	9.0"	8.0"	8.0"	8.0"	7.0"	7.0"	7.0"	7.0"	6.0"	6.0"	6.0"	6.0"	6.0"	6.0"	5.0"	5.0"	5.0"
		55	12.0"	12.0"	12.0"	12.0"	11.0"	11.0"	10.0"	9.0"	9.0"	9.0"	8.0"	8.0"	7.0"	7.0"	7.0"	7.0"	6.0"	6.0"	6.0"	6.0"	6.0"	5.0"	5.0"	5.0"	5.0"	5.0"	5.0"
		60	12.0"	12.0"	12.0"	12.0"	11.0"	10.0"	9.0"	9.0"	8.0"	8.0"	8.0"	7.0"	7.0"	7.0"	6.0"	6.0"	6.0"	6.0"	6.0"	5.0"	5.0"	5.0"	5.0"	5.0"	5.0"	5.0"	4.0"
		65	12.0"	12.0"	12.0"	11.0"	10.0"	9.0"	9.0"	8.0"	8.0"	8.0"	7.0"	7.0"	7.0"	6.0"	6.0"	6.0"	6.0"	5.0"	5.0"	5.0"	5.0"	5.0"	5.0"	5.0"	4.0"	4.0"	4.0"
		70	12.0"	12.0"	11.0"	10.0"	10.0"	9.0"	8.0"	8.0"	7.0"	7.0"	7.0"	6.0"	6.0"	6.0"	6.0"	5.0"	5.0"	5.0"	5.0"	5.0"	5.0"	5.0"	4.0"	4.0"	4.0"	4.0"	4.0"
		75	12.0"	12.0"	11.0"	10.0"	9.0"	9.0"	8.0"	8.0"	7.0"	7.0"	6.0"	6.0"	6.0"	6.0"	5.0"	5.0"	5.0"	5.0"	5.0"	5.0"	4.0"	4.0"	4.0"	4.0"	4.0"	4.0"	4.0"
		80	12.0"	11.0"	10.0"	9.0"	9.0"	8.0"	8.0"	7.0"	7.0"	6.0"	6.0"	6.0"	6.0"	5.0"	5.0"	5.0"	5.0"	5.0"	4.0"	4.0"	4.0"	4.0"	4.0"	4.0"	4.0"	4.0"	4.0"
		85	12.0"	11.0"	10.0"	9.0"	8.0"	8.0"	7.0"	7.0"	6.0"	6.0"	6.0"	6.0"	5.0"	5.0"	5.0"	5.0"	5.0"	4.0"	4.0"	4.0"	4.0"	4.0"	4.0"	4.0"	4.0"	3.0"	3.0"
		90	12.0"	10.0"	9.0"	9.0"	8.0"	7.0"	7.0"	7.0"	6.0"	6.0"	6.0"	5.0"	5.0"	5.0"	5.0"	5.0"	4.0"	4.0"	4.0"	4.0"	4.0"	4.0"	4.0"	3.0"	3.0"	3.0"	3.0"
		95	11.0"	10.0"	9.0"	8.0"	8.0"	7.0"	7.0"	6.0"	6.0"	6.0"	5.0"	5.0"	5.0"	5.0"	4.0"	4.0"	4.0"	4.0"	4.0"	4.0"	4.0"	3.0"	3.0"	3.0"	3.0"	3.0"	3.0"
		100	11.0"	10.0"	9.0"	8.0"	7.0"	7.0"	6.0"	6.0"	6.0"	5.0"	5.0"	5.0"	5.0"	4.0"	4.0"	4.0"	4.0"	4.0"	4.0"	4.0"	3.0"	3.0"	3.0"	3.0"	3.0"	3.0"	3.0"
		105	10.0"	9.0"	8.0"	8.0"	7.0"	7.0"	6.0"	6.0"	5.0"	5.0"	5.0"	5.0"	5.0"	4.0"	4.0"	4.0"	4.0"	4.0"	4.0"	3.0"	3.0"	3.0"	3.0"	3.0"	3.0"	3.0"	3.0"
		110	10.0"	9.0"	8.0"	7.0"	7.0"	6.0"	6.0"	6.0"	5.0"	5.0"	5.0"	5.0"	4.0"	4.0"	4.0"	4.0"	4.0"	4.0"	3.0"	3.0"	3.0"	3.0"	3.0"	3.0"	3.0"	3.0"	3.0"
		115	10.0"	9.0"	8.0"	7.0"	7.0"	6.0"	6.0"	5.0"	5.0"	5.0"	5.0"	4.0"	4.0"	4.0"	4.0"	4.0"	4.0"	4.0"	3.0"	3.0"	3.0"	3.0"	3.0"	3.0"	3.0"	3.0"	3.0"
		120	9.0"	8.0"	8.0"	7.0"	6.0"	6.0"	6.0"	5.0"	5.0"	5.0"	4.0"	4.0"	4.0"	4.0"	4.0"	4.0"	3.0"	3.0"	3.0"	3.0"	3.0"	3.0"	3.0"	3.0"	3.0"	3.0"	
		125	9.0"	8.0"	7.0"	7.0"	6.0"	6.0"	5.0"	5.0"	5.0"	5.0"	4.0"	4.0"	4.0"	4.0"	4.0"	3.0"	3.0"	3.0"	3.0"	3.0"	3.0"	3.0"	3.0"	3.0"	3.0"		
		130	9.0"	8.0"	7.0"	7.0"	6.0"	6.0"	5.0"	5.0"	5.0"	4.0"	4.0"	4.0"	4.0"	4.0"	3.0"	3.0"	3.0"	3.0"	3.0"	3.0"	3.0"	3.0"	3.0"	3.0"			
			2-1/2" MIN EDGE DISTANCE																										
	#14-10 PANELMATE FEMALE ID 1-3/4" EMBEDMENT (3350 PSI CONC)	30	12.0"	12.0"	12.0"	12.0"	12.0"	12.0"	11.0"	10.0"	10.0"	9.0"	9.0"	9.0"	8.0"	8.0"	8.0"	7.0"	7.0"	7.0"	7.0"	6.0"	6.0"	6.0"	6.0"	6.0"	6.0"	5.0"	5.0"
		35	12.0"	12.0"	12.0"	12.0"	11.0"	10.0"	10.0"	9.0"	9.0"	8.0"	8.0"	8.0"	7.0"	7.0"	7.0"	7.0"	6.0"	6.0"	6.0"	6.0"	6.0"	5.0"	5.0"	5.0"	5.0"	5.0"	5.0"
		40	12.0"	12.0"	12.0"	11.0"	10.0"	9.0"	9.0"	8.0"	8.0"	8.0"	7.0"	7.0"	7.0"	6.0"	6.0"	6.0"	6.0"	6.0"	5.0"	5.0"	5.0"	5.0"	5.0"	5.0"	4.0"	4.0"	4.0"
		45	12.0"	12.0"	11.0"	10.0"	9.0"	9.0"	8.0"	8.0"	7.0"	7.0"	7.0"	6.0"	6.0"	6.0"	6.0"	5.0"	5.0"	5.0"	5.0"	5.0"	5.0"	4.0"	4.0"	4.0"	4.0"	4.0"	4.0"
		50	12.0"	11.0"	10.0"	9.0"	9.0"	8.0"	8.0"	7.0"	7.0"	6.0"	6.0"	6.0"	6.0"	5.0"	5.0"	5.0"	5.0"	5.0"	4.0"	4.0"	4.0"	4.0"	4.0"	4.0"	4.0"	4.0"	4.0"
		55	12.0"	10.0"	9.0"	9.0"	8.0"	8.0"	7.0"	7.0"	6.0"	6.0"	6.0"	5.0"	5.0"	5.0"	5.0"	5.0"	4.0"	4.0"	4.0"	4.0"	4.0"	4.0"	4.0"	4.0"	4.0"	3.0"	3.0"
		60	11.0"	10.0"	9.0"	8.0"	8.0"	7.0"	7.0"	6.0"	6.0"	6.0"	5.0"	5.0"	5.0"	5.0"	4.0"	4.0"	4.0"	4.0"	4.0"	4.0"	4.0"	4.0"	3.0"	3.0"	3.0"	3.0"	3.0"
		65	10.0"	9.0"	8.0"	8.0"	7.0"	7.0"	6.0"	6.0"	6.0"	5.0"	5.0"	5.0"	5.0"	4.0"	4.0"	4.0"	4.0"	4.0"	4.0"	4.0"	3.0"	3.0"	3.0"	3.0"	3.0"	3.0"	3.0"
		70	10.0"	9.0"	8.0"	7.0"	7.0"	6.0"	6.0"	6.0"	5.0"	5.0"	5.0"	5.0"	4.0"	4.0"	4.0"	4.0"	4.0"	4.0"	3.0"	3.0"	3.0"	3.0"	3.0"	3.0"	3.0"	3.0"	3.0"
		75	9.0"	8.0"	8.0"	7.0"	6.0"	6.0"	6.0"	5.0"	5.0"	5.0"	4.0"	4.0"	4.0"	4.0"	4.0"	4.0"	4.0"	3.0"	3.0"	3.0"	3.0"	3.0"	3.0"	3.0"	3.0"	3.0"	3.0"
		80	9.0"	8.0"	7.0"	7.0"	6.0"	6.0"	5.0"	5.0"	5.0"	4.0"	4.0"	4.0"	4.0"	4.0"	4.0"	3.0"	3.0"	3.0"	3.0"	3.0"	3.0"	3.0"	3.0"	3.0"	3.0"	3.0"	
		85	9.0"	8.0"	7.0"	6.0"	6.0"	5.0"	5.0"	5.0"	5.0"	4.0"	4.0"	4.0"	4.0"	4.0"	3.0"	3.0"	3.0"	3.0"	3.0"	3.0"	3.0"	3.0"	3.0"	3.0"			
		90	8.0"	7.0"	7.0"	6.0"	6.0"	5.0"	5.0"	5.0"	4.0"	4.0"	4.0"	4.0"	4.0"	3.0"	3.0"	3.0"	3.0"	3.0"	3.0"	3.0"	3.0"	3.0"					
		95	8.0"	7.0"	6.0"	6.0"	5.0"	5.0"	5.0"	4.0"	4.0"	4.0"	4.0"	4.0"	3.0"	3.0"	3.0"	3.0"	3.0"	3.0"	3.0"	3.0"	3.0"						
		100	8.0"	7.0"	6.0"	6.0"	5.0"	5.0"	4.0"	4.0"	4.0"	4.0"	4.0"	3.0"	3.0"	3.0"	3.0"	3.0"	3.0"	3.0"	3.0"	3.0"							
		105	7.0"	7.0"	6.0"	5.0"	5.0"	5.0"	4.0"	4.0"	4.0"	4.0"	3.0"	3.0"	3.0"	3.0"	3.0"	3.0"	3.0"	3.0"	3.0"								
		110	7.0"	6.0"	6.0"	5.0"	5.0"	4.0"	4.0"	4.0"	4.0"	4.0"	3.0"	3.0"	3.0"	3.0"	3.0"	3.0"	3.0"										
		115	7.0"	6.0"	6.0"	5.0"	5.0"	4.0"	4.0"	4.0"	4.0"	3.0"	3.0"	3.0"	3.0"	3.0"	3.0"	3.0"											
		120	7.0"	6.0"	5.0"	5.0"	4.0"	4.0"	4.0"	4.0"	3.0"	3.0"	3.0"	3.0"	3.0"	3.0"	3.0"												
		125	6.0"	6.0"	5.0"	5.0"	4.0"	4.0"	4.0"	4.0"	3.0"	3.0"	3.0"	3.0"	3.0"	3.0"													
		130	6.0"	6.0"	5.0"	5.0"	4.0"	4.0"	4.0"	3.0"	3.0"	3.0"	3.0"	3.0"	3.0"	3.0"													
			4" MIN EDGE DISTANCE																										
	1/4" PANELMATE INSERT 1-5/8" EMBEDMENT (2700 PSI CONC)	30	12.0"	12.0"	12.0"	12.0"	12.0"	12.0"	12.0"	12.0"	12.0"	12.0"	12.0"	12.0"	11.0"	11.0"	10.0"	10.0"	10.0"	9.0"	9.0"	9.0"	9.0"	8.0"	8.0"	8.0"	8.0"	8.0"	7.0"
		35	12.0"	12.0"	12.0"	12.0"	12.0"	12.0"	12.0"	12.0"	12.0"	11.0"	11.0"	10.0"	10.0"	10.0"	9.0"	9.0"	9.0"	8.0"	8.0"	8.0"	8.0"	7.0"	7.0"	7.0"	7.0"	7.0"	7.0"
		40	12.0"	12.0"	12.0"	12.0"	12.0"	12.0"	12.0"	12.0"	11.0"	10.0"	10.0"	10.0"	9.0"	9.0"	8.0"	8.0"	8.0"	8.0"	7.0"	7.0"	7.0"	7.0"	7.0"	6.0"	6.0"	6.0"	6.0"
		45	12.0"	12.0"	12.0"	12.0"	12.0"	12.0"	11.0"	11.0"	10.0"	10.0"	9.0"	9.0"	8.0"	8.0"	8.0"	7.0"	7.0"	7.0"	7.0"	7.0"	6.0"	6.0"	6.0"	6.0"	6.0"	6.0"	5.0"
		50	12.0"	12.0"	12.0"	12.0"	12.0"	11.0"	10.0"	10.0"	9.0"	9.0"	8.0"	8.0"	8.0"	7.0"	7.0"	7.0"	7.0"	6.0"	6.0"	6.0"	6.0"	6.0"	6.0"	5.0"	5.0"	5.0"	5.0"
		55	12.0"	12.0"	12.0"	12.0"	11.0"	10.0"	10.0"	9.0"	9.0"	8.0"	8.0"	8.0"	7.0"	7.0"	7.0"	6.0"	6.0"	6.0"	6.0"	6.0"	5.0"	5.0"	5.0"	5.0"	5.0"	5.0"	5.0"
		60	12.0"	12.0"	12.0"	11.0"	10.0"	10.0"	9.0"	9.0"	8.0"	8.0"	7.0"	7.0"	7.0"	6.0"	6.0"	6.0"	6.0"	6.0"	5.0"	5.0"	5.0"	5.0"	5.0"	5.0"	5.0"	4.0"	4.0"
		65	12.0"	12.0"	12.0"	11.0"	10.0"	9.0"	9.0"	8.0"	8.0"	7.0"	7.0"	7.0"	6.0"	6.0"	6.0"	6.0"	5.0"	5.0"	5.0"	5.0"	5.0"	4.0"	4.0"	4.0"	4.0"	4.0"	4.0"
		70	12.0"	12.0"	11.0"	10.0"	9.0"	9.0"	8.0"	8.0"	7.0"	7.0"	7.0"	6.0"	6.0"	6.0"	6.0"	5.0"	5.0"	5.0"	5.0"	5.0"	4.0"	4.0"	4.0"	4.0"	4.0"	4.0"	4.0"
		75	12.0"	11.0"	10.0"	10.0"	9.0"	8.0"	8.0"	7.0"	7.0"	7.0"	6.0"	6.0"	6.0"	5.0"	5.0"	5.0"	5.0"	5.0"	5.0"	4.0"	4.0"	4.0"	4.0"	4.0"	4.0"	4.0"	4.0"
		80	12.0"	11.0"	10.0"	9.0"	8.0"	8.0"	7.0"	7.0"	7.0"	6.0"	6.0"	6.0"	5.0"	5.0"	5.0"	5.0"	5.0"	5.0"	4.0"	4.0"	4.0"	4.0"	4.0"	4.0"	4.0"	3.0"	3.0"
		85	12.0"	10.0"	10.0"	9.0"	8.0"	8.0"	7.0"	7.0"	6.0"	6.0"	6.0"	5.0"	5.0"	5.0"	5.0"	5.0"	4.0"	4.0"	4.0"	4.0"	4.0"	4.0"	4.0"	4.0"	3.0"	3.0"	3.0"
		90	11.0"	10.0"	9.0"	8.0"	8.0"	7.0"	7.0"	6.0"	6.0"	6.0"	5.0"	5.0"	5.0"	5.0"	5.0"	5.0"	4.0"	4.0"	4.0"	4.0"	4.0"	4.0"	4.0"	3.0"	3.0"	3.0"	3.0"
		95	11.0"	10.0"	9.0"	8.0"	7.0"	7.0"	6.0"	6.0"	6.0"	5.0"	5.0"	5.0"	5.0"	5.0"	4.0"	4.0"	4.0"	4.0"	4.0"	4.0"	4.0"	3.0"	3.0"	3.0"	3.0"	3.0"	3.0"
		100	10.0"	9.0"	8.0"	8.0"	7.0"	7.0"	6.0"	6.0"	6.0"	5.0"	5.0"	5.0"	5.0"	4.0"	4.0"	4.0"	4.0"	4.0"	4.0"	3.0"	3.0"	3.0"	3.0"	3.0"	3.0"	3.0"	3.0"
		105	10.0"	9.0"	8.0"	7.0"	7.0"	6.0"	6.0"	6.0"	5.0"	5.0"	5.0"	5.0"	4.0"	4.0"	4.0"	4.0"	4.0"	4.0"	3.0"	3.0"	3.0"	3.0"	3.0"	3.0"	3.0"	3.0"	3.0"
		110	10.0"	9.0"	8.0"	7.0"	7.0"	6.0"	6.0"	5.0"	5.0"	5.0"	5.0"	4.0"	4.0"	4.0"	4.0"	4.0"	4.0"	3.0"	3.0"	3.0"	3.0"	3.0"	3.0"	3.0"	3.0"	3.0"	3.0"
		115	9.0"	8.0"	8.0"	7.0"	6.0"	6.0"	6.0"	5.0"	5.0"	5.0"	4.0"	4.0"	4.0"	4.0"	4.0"	4.0"	3.0"	3.0"	3.0"	3.0"	3.0"	3.0"	3.0"	3.0"	3.0"	3.0"	
		120	9.0"	8.0"	7.0"	7.0"	6.0"	6.0"	5.0"	5.0"	5.0"	5.0"	4.0"	4.0"	4.0"	4.0"	4.0"	3.0"	3.0"	3.0"	3.0"	3.0"	3.0"	3.0"	3.0"	3.0"	3.0"		
		125	9.0"	8.0"	7.0"	7.0"	6.0"	6.0"	5.0"	5.0"	5.0"	4.0"	4.0"	4.0"	4.0"	4.0"	3.0"	3.0"	3.0"	3.0"	3.0"	3.0"	3.0"	3.0"	3.0"				
		130	9.0"	8.0"	7.0"	6.0"	6.0"	5.0"	5.0"	5.0"	4.0"	4.0"	4.0"	4.0"	4.0"	4.0"	3.0"	3.0"	3.0"	3.0"	3.0"	3.0"	3.0"	3.0"	3.0"				

NOTES:

1. APPROVED FOR USE ATTACHING GROMMET SCREENS & ALL TRACKS OR STUDDED ANGLE WITH ¼" SIDEWALK BOLT

FRANK L. BENNARDO, P.E.
REG. 0046549
10/20/2017
IF CHECKED, CERTIFYING P.E. APPEARS BELOW
FRANK L. BENNARDO, P.E.
46549

ENGINEERING EXPRESS
CORPORATE OFFICE:
160 SW 12th AVE, SUITE 108
DEERFIELD BEACH, FL 33442
P: (954) 354-0660 F: (954) 354-0443
E: HELLO@ENGINEERINGEXPRESS.COM
ENGINEERINGEXPRESS.COM
CERT OF AUTH #9885

STORM SMART INDUSTRIES, INC.
6182 IDLEWILD STREET
FORT MYERS , FL
(239) 938-1000

STORM CATCHER WIND ABATEMENT SYSTEM FL11291.2 HVHZ
-
-, FL

REMARKS	DRWN	CHKD	DATE
INIT ISSUE	RWN	FLB	10/18/17

THIS DOCUMENT IS THE PROPERTY OF ENGINEERING EXPRESS, AND SHALL NOT BE REPRODUCED IN WHOLE OR PART WITHOUT WRITTEN CONSENT OF ENGINEERING EXPRESS. ALTERATIONS, ADDITIONS, OR OTHER MARKINGS TO THIS DOCUMENT ARE NOT PERMITTED AND INVALIDATE OUR CERTIFICATION.

COPYRIGHT ENGINEERING EXPRESS ©

16-3080

SCALE: NTS UNLESS NOTED

10/20/2017 - 3:07pm zachr V:\Projects\16-3080 Storm Catcher Wind Abatement System FL11291-R4\WP\2017 FBC Update\16-3080e-Dwg-11291.2.dwg

¼" PANELMATE PRO, PLUS, TVAS & FEMALE & INSERT
FOR SPANS 16' TO 30'

TABLE 10 - CONCRETE

HOST STRUCT.	ANCHOR TYPE	LOAD (psf)	SPANS 16' ≤ 16'-6"	SPANS 16'-7" ≤ 17'	SPANS 17' ≤ 17'-6"	SPANS 17'-7" ≤ 18'	SPANS 18' ≤ 18'-6"	SPANS 18'-7" ≤ 19'	SPANS 19' ≤ 19'-6"	SPANS 19'-7" ≤ 20'	SPANS 20' ≤ 20'-6"	SPANS 20'-7" ≤ 21'	SPANS 21' ≤ 21'-6"	SPANS 21'-7" ≤ 22'	SPANS 22' ≤ 22'-6"	SPANS 22'-7" ≤ 23'	SPANS 23' ≤ 23'-6"	SPANS 23'-7" ≤ 24'	SPANS 24' ≤ 24'-6"	SPANS 24'-7" ≤ 25'	SPANS 25' ≤ 25'-6"	SPANS 25'-7" ≤ 26'	SPANS 26' ≤ 26'-6"	SPANS 26'-7" ≤ 27'	SPANS 27' ≤ 27'-6"	SPANS 27'-7" ≤ 28'	SPANS 28' ≤ 28'-6"	SPANS 28'-7" ≤ 29'	SPANS 29' ≤ 29'-6"	SPANS 29'-7" ≤ 30'
			2-1/2" MIN EDGE DISTANCE																											
CONCRETE	#14-10 PANELMATE PRO, PLUS, TVAS 2" EMBEDMENT (3350 PSI CONC)	30	7.0"	7.0"	7.0"	7.0"	7.0"	7.0"	7.0"	6.0"	6.0"	6.0"	6.0"	6.0"	6.0"	6.0"	6.0"	6.0"	6.0"	6.0"	5.0"	5.0"	5.0"	5.0"	5.0"	5.0"	5.0"	5.0"	5.0"	5.0"
		35	7.0"	6.0"	6.0"	6.0"	6.0"	6.0"	6.0"	6.0"	6.0"	6.0"	5.0"	5.0"	5.0"	5.0"	5.0"	5.0"	5.0"	5.0"	5.0"	5.0"	5.0"	5.0"	5.0"	5.0"	5.0"	4.0"	4.0"	4.0"
		40	6.0"	6.0"	6.0"	6.0"	5.0"	5.0"	5.0"	5.0"	5.0"	5.0"	5.0"	5.0"	5.0"	5.0"	5.0"	5.0"	4.0"	4.0"	4.0"	4.0"	4.0"	4.0"	4.0"	4.0"	4.0"	4.0"	4.0"	4.0"
		45	5.0"	5.0"	5.0"	5.0"	5.0"	5.0"	5.0"	5.0"	5.0"	5.0"	4.0"	4.0"	4.0"	4.0"	4.0"	4.0"	4.0"	4.0"	4.0"	4.0"	4.0"	4.0"	4.0"	4.0"	4.0"	4.0"	4.0"	4.0"
		50	5.0"	5.0"	5.0"	5.0"	5.0"	5.0"	4.0"	4.0"	4.0"	4.0"	4.0"	4.0"	4.0"	4.0"	4.0"	4.0"	4.0"	4.0"	4.0"	4.0"	4.0"	4.0"	3.0"	3.0"	3.0"	3.0"	3.0"	3.0"
		55	5.0"	5.0"	4.0"	4.0"	4.0"	4.0"	4.0"	4.0"	4.0"	4.0"	4.0"	4.0"	4.0"	4.0"	4.0"	4.0"	3.0"	3.0"	3.0"	3.0"	3.0"	3.0"	3.0"	3.0"	3.0"	3.0"	3.0"	3.0"
		60	4.0"	4.0"	4.0"	4.0"	4.0"	4.0"	4.0"	4.0"	4.0"	4.0"	4.0"	3.0"	3.0"	3.0"	3.0"	3.0"	3.0"	3.0"	3.0"	3.0"	3.0"	3.0"	3.0"	3.0"	3.0"	3.0"	3.0"	3.0"
			2 1/2" MIN EDGE DISTANCE																											
	#14-10 PANELMATE FEMALE ID 1-3/4" EMBEDMENT (3350 PSI CONC)	30	5.0"	5.0"	5.0"	5.0"	5.0"	5.0"	5.0"	5.0"	4.0"	4.0"	4.0"	4.0"	4.0"	4.0"	4.0"	4.0"	4.0"	4.0"	4.0"	4.0"	4.0"	4.0"	4.0"	4.0"	4.0"	4.0"	4.0"	4.0"
		35	5.0"	5.0"	4.0"	4.0"	4.0"	4.0"	4.0"	4.0"	4.0"	4.0"	4.0"	4.0"	4.0"	4.0"	4.0"	4.0"	3.0"	3.0"	3.0"	3.0"	3.0"	3.0"	3.0"	3.0"	3.0"	3.0"	3.0"	3.0"
		40	4.0"	4.0"	4.0"	4.0"	4.0"	4.0"	4.0"	4.0"	4.0"	3.0"	3.0"	3.0"	3.0"	3.0"	3.0"	3.0"	3.0"	3.0"	3.0"	3.0"	3.0"	3.0"	3.0"	3.0"	3.0"	3.0"	3.0"	3.0"
		45	4.0"	4.0"	4.0"	4.0"	3.0"	3.0"	3.0"	3.0"	3.0"	3.0"	3.0"	3.0"	3.0"	3.0"	3.0"	3.0"	3.0"	3.0"	3.0"	3.0"	3.0"	3.0"	3.0"	3.0"	3.0"	3.0"	3.0"	3.0"
		50	4.0"	3.0"	3.0"	3.0"	3.0"	3.0"	3.0"	3.0"	3.0"	3.0"	3.0"	3.0"	3.0"	3.0"	3.0"	3.0"	3.0"	3.0"	3.0"									
		55	3.0"	3.0"	3.0"	3.0"	3.0"	3.0"	3.0"	3.0"	3.0"	3.0"	3.0"	3.0"	3.0"	3.0"														
		60	3.0"	3.0"	3.0"	3.0"	3.0"	3.0"	3.0"	3.0"	3.0"																			
			4" MIN EDGE DISTANCE																											
	1/4" PANELMATE INSERT 1-5/8" EMBEDMENT (2700 PSI CONC)	30	7.0"	7.0"	7.0"	7.0"	7.0"	6.0"	6.0"	6.0"	6.0"	6.0"	6.0"	6.0"	6.0"	6.0"	6.0"	6.0"	5.0"	5.0"	5.0"	5.0"	5.0"	5.0"	5.0"	5.0"	5.0"	5.0"	5.0"	5.0"
		35	6.0"	6.0"	6.0"	6.0"	6.0"	6.0"	6.0"	6.0"	5.0"	5.0"	5.0"	5.0"	5.0"	5.0"	5.0"	5.0"	5.0"	5.0"	5.0"	5.0"	5.0"	5.0"	4.0"	4.0"	4.0"	4.0"	4.0"	4.0"
		40	6.0"	6.0"	6.0"	5.0"	5.0"	5.0"	5.0"	5.0"	5.0"	5.0"	5.0"	5.0"	5.0"	5.0"	4.0"	4.0"	4.0"	4.0"	4.0"	4.0"	4.0"	4.0"	4.0"	4.0"	4.0"	4.0"	4.0"	4.0"
		45	5.0"	5.0"	5.0"	5.0"	5.0"	5.0"	5.0"	5.0"	4.0"	4.0"	4.0"	4.0"	4.0"	4.0"	4.0"	4.0"	4.0"	4.0"	4.0"	4.0"	4.0"	4.0"	4.0"	4.0"	4.0"	4.0"	4.0"	3.0"
		50	5.0"	5.0"	5.0"	5.0"	4.0"	4.0"	4.0"	4.0"	4.0"	4.0"	4.0"	4.0"	4.0"	4.0"	4.0"	4.0"	4.0"	4.0"	4.0"	3.0"	3.0"	3.0"	3.0"	3.0"	3.0"	3.0"	3.0"	3.0"
		55	5.0"	4.0"	4.0"	4.0"	4.0"	4.0"	4.0"	4.0"	4.0"	4.0"	4.0"	4.0"	4.0"	3.0"	3.0"	3.0"	3.0"	3.0"	3.0"	3.0"	3.0"	3.0"	3.0"	3.0"	3.0"	3.0"	3.0"	3.0"
		60	4.0"	4.0"	4.0"	4.0"	4.0"	4.0"	4.0"	4.0"	4.0"	3.0"	3.0"	3.0"	3.0"	3.0"	3.0"	3.0"	3.0"	3.0"	3.0"	3.0"	3.0"	3.0"	3.0"	3.0"	3.0"	3.0"	3.0"	3.0"

NOTES:

1. APPROVED FOR USE ATTACHING GROMMET SCREENS & ALL TRACKS OR STUDDED ANGLE WITH ¼" SIDEWALK BOLT

FRANK L. BENNARDO, P.E.
PE#.0046549
10/20/2017
SEALED, CERTIFICATE OF AUTHORIZATION BELOW
FRANK L. BENNARDO, P.E.
46549

FRANK L. BENNARDO LICENSE No PE0046549 STATE OF FLORIDA PROFESSIONAL ENGINEER

ENGINEERING EXPRESS®
CORPORATE OFFICE:
160 SW 12th AVE, SUITE 106
DEERFIELD BEACH, FL 33442
P: (954) 354-0660 F: (954) 354-0443
E: HELLO@ENGINEERINGEXPRESS.COM
ENGINEERINGEXPRESS.COM
CERT OF AUTH #9885

STORM SMART INDUSTRIES, INC.
6182 IDLEWILD STREET
FORT MYERS , FL
(239) 938-1000

STORM CATCHER WIND ABATEMENT SYSTEM FL11291.2 HVHZ
-
-, FL

REMARKS	DRWN	CHKD	DATE
INIT ISSUE	RWN	FLB	10/18/17

THIS DOCUMENT IS THE PROPERTY OF ENGINEERING EXPRESS, AND SHALL NOT BE REPRODUCED IN WHOLE OR PART WITHOUT WRITTEN CONSENT OF ENGINEERING EXPRESS. ALTERATIONS, ADDITIONS, OR OTHER MARKINGS TO THIS DOCUMENT ARE NOT PERMITTED AND INVALIDATE OUR CERTIFICATION.

COPYRIGHT ENGINEERING EXPRESS®

16-3080

SCALE: NTS UNLESS NOTED

10/20/2017 - 3:07pm zachr V:\Projects\16-3080 Storm Catcher Wind Abatement System FL11291-R4\WP\2017 FBC Update\16-3080e-Dwg-11291.2.dwg

5/16" & 1/4" ELCO ULTRACON HFH
STRAP BRACKET SPACING

TABLE 11 - STRAP BRACKET ON CONCRETE

HOST STRUCT.	ANCHOR TYPE	LOAD (psf)	SPANS 0" ≤ 3'	SPANS 3' ≤ 3'-6"	SPANS 3'-7" ≤ 4'	SPANS 4' ≤ 4'-6"	SPANS 4'-7" ≤ 5'	SPANS 5' ≤ 5'-6"	SPANS 5'-7" ≤ 6'	SPANS 6' ≤ 6'-6"	SPANS 6'-7" ≤ 7'	SPANS 7' ≤ 7'-6"	SPANS 7'-7" ≤ 8'	SPANS 8' ≤ 8'-6"	SPANS 8'-7" ≤ 9'	SPANS 9' ≤ 9'-6"	SPANS 9'-7" ≤ 10'	SPANS 10' ≤ 10'-6"	SPANS 10'-7" ≤ 11'	SPANS 11' ≤ 11'-6"	SPANS 11'-7" ≤ 12'	SPANS 12' ≤ 12'-6"	SPANS 12'-7" ≤ 13'	SPANS 13' ≤ 13'-6"	SPANS 13'-7" ≤ 14'	SPANS 14' ≤ 14'-6"	SPANS 14'-7" ≤ 15'	SPANS 15' ≤ 15'-6"	SPANS 15'-7" ≤ 16'
			3 1/8" MIN EDGE DISTANCE																									
CONCRETE	5/16" ELCO ULTRACON HFH 2" EMBEDMENT (3500 PSI CONC)	30	18.0"	18.0"	18.0"	18.0"	18.0"	18.0"	18.0"	18.0"	18.0"	18.0"	18.0"	18.0"	18.0"	18.0"	18.0"	18.0"	18.0"	18.0"	18.0"	18.0"	18.0"	18.0"	18.0"	18.0"	18.0"	18.0"
		35	18.0"	18.0"	18.0"	18.0"	18.0"	18.0"	18.0"	18.0"	18.0"	18.0"	18.0"	18.0"	18.0"	18.0"	18.0"	18.0"	18.0"	18.0"	18.0"	18.0"	18.0"	18.0"	18.0"	18.0"	18.0"	18.0"
		40	18.0"	18.0"	18.0"	18.0"	18.0"	18.0"	18.0"	18.0"	18.0"	18.0"	18.0"	18.0"	18.0"	18.0"	18.0"	18.0"	18.0"	18.0"	18.0"	18.0"	18.0"	18.0"	18.0"	18.0"	18.0"	18.0"
		45	18.0"	18.0"	18.0"	18.0"	18.0"	18.0"	18.0"	18.0"	18.0"	18.0"	18.0"	18.0"	18.0"	18.0"	18.0"	18.0"	18.0"	18.0"	18.0"	18.0"	18.0"	18.0"	18.0"	18.0"	18.0"	17.0"
		50	18.0"	18.0"	18.0"	18.0"	18.0"	18.0"	18.0"	18.0"	18.0"	18.0"	18.0"	18.0"	18.0"	18.0"	18.0"	18.0"	18.0"	18.0"	18.0"	18.0"	18.0"	18.0"	17.0"	17.0"	17.0"	16.0"
		55	18.0"	18.0"	18.0"	18.0"	18.0"	18.0"	18.0"	18.0"	18.0"	18.0"	18.0"	18.0"	18.0"	18.0"	18.0"	18.0"	18.0"	18.0"	18.0"	18.0"	17.0"	17.0"	16.0"	16.0"	15.0"	15.0"
		60	18.0"	18.0"	18.0"	18.0"	18.0"	18.0"	18.0"	18.0"	18.0"	18.0"	18.0"	18.0"	18.0"	18.0"	18.0"	18.0"	18.0"	18.0"	17.0"	17.0"	16.0"	16.0"	15.0"	15.0"	14.0"	14.0"
		65	18.0"	18.0"	18.0"	18.0"	18.0"	18.0"	18.0"	18.0"	18.0"	18.0"	18.0"	18.0"	18.0"	18.0"	18.0"	18.0"	18.0"	17.0"	16.0"	16.0"	16.0"	15.0"	15.0"	14.0"	14.0"	13.0"
		70	18.0"	18.0"	18.0"	18.0"	18.0"	18.0"	18.0"	18.0"	18.0"	18.0"	18.0"	18.0"	18.0"	18.0"	18.0"	17.0"	17.0"	16.0"	16.0"	15.0"	15.0"	14.0"	14.0"	14.0"	13.0"	13.0"
		75	18.0"	18.0"	18.0"	18.0"	18.0"	18.0"	18.0"	18.0"	18.0"	18.0"	18.0"	18.0"	18.0"	18.0"	17.0"	16.0"	16.0"	15.0"	15.0"	14.0"	14.0"	14.0"	13.0"	13.0"	13.0"	12.0"
		80	18.0"	18.0"	18.0"	18.0"	18.0"	18.0"	18.0"	18.0"	18.0"	18.0"	18.0"	18.0"	17.0"	17.0"	16.0"	16.0"	15.0"	15.0"	14.0"	14.0"	13.0"	13.0"	13.0"	12.0"	12.0"	12.0"
		85	18.0"	18.0"	18.0"	18.0"	18.0"	18.0"	18.0"	18.0"	18.0"	18.0"	18.0"	17.0"	17.0"	16.0"	15.0"	15.0"	14.0"	14.0"	13.0"	13.0"	13.0"	12.0"	12.0"	12.0"	11.0"	11.0"
		90	18.0"	18.0"	18.0"	18.0"	18.0"	18.0"	18.0"	18.0"	18.0"	18.0"	17.0"	17.0"	16.0"	15.0"	15.0"	14.0"	14.0"	13.0"	13.0"	13.0"	12.0"	12.0"	11.0"	11.0"	11.0"	10.0"
		95	18.0"	18.0"	18.0"	18.0"	18.0"	18.0"	18.0"	18.0"	18.0"	18.0"	17.0"	16.0"	15.0"	15.0"	14.0"	14.0"	13.0"	13.0"	12.0"	12.0"	12.0"	11.0"	11.0"	11.0"	10.0"	10.0"
		100	18.0"	18.0"	18.0"	18.0"	18.0"	18.0"	18.0"	18.0"	18.0"	17.0"	16.0"	15.0"	15.0"	14.0"	14.0"	13.0"	13.0"	12.0"	12.0"	12.0"	11.0"	11.0"	11.0"	10.0"	10.0"	10.0"
		105	18.0"	18.0"	18.0"	18.0"	18.0"	18.0"	18.0"	18.0"	17.0"	16.0"	16.0"	15.0"	14.0"	14.0"	13.0"	13.0"	12.0"	12.0"	11.0"	11.0"	11.0"	10.0"	10.0"	10.0"	10.0"	9.0"
		110	18.0"	18.0"	18.0"	18.0"	18.0"	18.0"	18.0"	18.0"	17.0"	16.0"	15.0"	14.0"	14.0"	13.0"	13.0"	12.0"	12.0"	11.0"	11.0"	11.0"	10.0"	10.0"	10.0"	10.0"	9.0"	9.0"
		115	18.0"	18.0"	18.0"	18.0"	18.0"	18.0"	18.0"	17.0"	16.0"	15.0"	15.0"	14.0"	13.0"	13.0"	12.0"	12.0"	11.0"	11.0"	11.0"	10.0"	10.0"	10.0"	10.0"	9.0"	9.0"	9.0"
		120	18.0"	18.0"	18.0"	18.0"	18.0"	18.0"	17.0"	16.0"	16.0"	15.0"	14.0"	13.0"	13.0"	12.0"	12.0"	11.0"	11.0"	11.0"	10.0"	10.0"	10.0"	9.0"	9.0"	9.0"	9.0"	8.0"
		125	18.0"	18.0"	18.0"	18.0"	18.0"	18.0"	17.0"	16.0"	16.0"	15.0"	14.0"	14.0"	13.0"	13.0"	12.0"	12.0"	11.0"	11.0"	10.0"	10.0"	10.0"	9.0"	9.0"	9.0"	9.0"	8.0"
		130	18.0"	18.0"	18.0"	18.0"	18.0"	18.0"	16.0"	16.0"	15.0"	14.0"	13.0"	13.0"	12.0"	12.0"	11.0"	11.0"	10.0"	10.0"	10.0"	9.0"	9.0"	9.0"	9.0"	8.0"	8.0"	8.0"
			2 1/2" MIN EDGE DISTANCE																									
	1/4" ELCO ULTRACON HFH 1-3/4" EMBEDMENT (3000 PSI CONC)	30	18.0"	18.0"	18.0"	18.0"	18.0"	18.0"	18.0"	18.0"	18.0"	18.0"	18.0"	18.0"	18.0"	18.0"	17.0"	17.0"	16.0"	15.0"	15.0"	15.0"	14.0"	14.0"	13.0"	13.0"	13.0"	12.0"
		35	18.0"	18.0"	18.0"	18.0"	18.0"	18.0"	18.0"	18.0"	18.0"	18.0"	18.0"	17.0"	17.0"	16.0"	15.0"	15.0"	14.0"	14.0"	13.0"	13.0"	13.0"	12.0"	12.0"	12.0"	11.0"	11.0"
		40	18.0"	18.0"	18.0"	18.0"	18.0"	18.0"	18.0"	18.0"	18.0"	17.0"	16.0"	16.0"	15.0"	14.0"	14.0"	13.0"	13.0"	13.0"	12.0"	12.0"	11.0"	11.0"	11.0"	11.0"	10.0"	10.0"
		45	18.0"	18.0"	18.0"	18.0"	18.0"	18.0"	18.0"	17.0"	17.0"	16.0"	15.0"	14.0"	14.0"	13.0"	13.0"	12.0"	12.0"	12.0"	11.0"	11.0"	11.0"	10.0"	10.0"	10.0"	9.0"	9.0"
		50	18.0"	18.0"	18.0"	18.0"	18.0"	18.0"	17.0"	16.0"	15.0"	15.0"	14.0"	13.0"	13.0"	12.0"	12.0"	11.0"	11.0"	11.0"	10.0"	10.0"	10.0"	9.0"	9.0"	9.0"	9.0"	8.0"
		55	18.0"	18.0"	18.0"	18.0"	18.0"	17.0"	16.0"	15.0"	14.0"	14.0"	13.0"	12.0"	12.0"	11.0"	11.0"	11.0"	10.0"	10.0"	10.0"	9.0"	9.0"	9.0"	9.0"	8.0"	8.0"	8.0"
		60	18.0"	18.0"	18.0"	17.0"	16.0"	15.0"	14.0"	13.0"	13.0"	12.0"	12.0"	11.0"	11.0"	10.0"	10.0"	9.0"	9.0"	9.0"	8.0"	8.0"	8.0"	8.0"	8.0"	8.0"		
		65	18.0"	18.0"	18.0"	17.0"	16.0"	15.0"	14.0"	13.0"	13.0"	12.0"	11.0"	11.0"	11.0"	10.0"	10.0"	9.0"	9.0"	9.0"	8.0"	8.0"	8.0"	8.0"	8.0"			
		70	18.0"	18.0"	18.0"	17.0"	15.0"	14.0"	13.0"	13.0"	12.0"	11.0"	11.0"	10.0"	10.0"	10.0"	9.0"	9.0"	9.0"	8.0"	8.0"	8.0"	8.0"					
		75	18.0"	18.0"	17.0"	16.0"	15.0"	14.0"	13.0"	12.0"	11.0"	11.0"	10.0"	10.0"	9.0"	9.0"	9.0"	8.0"	8.0"	8.0"	8.0"							
		80	18.0"	18.0"	16.0"	15.0"	14.0"	13.0"	12.0"	11.0"	11.0"	10.0"	10.0"	9.0"	9.0"	9.0"	8.0"	8.0"	8.0"									
		85	18.0"	17.0"	16.0"	14.0"	13.0"	12.0"	12.0"	11.0"	10.0"	10.0"	9.0"	9.0"	9.0"	8.0"	8.0"	8.0"										
		90	18.0"	17.0"	15.0"	14.0"	13.0"	12.0"	11.0"	11.0"	10.0"	9.0"	9.0"	9.0"	8.0"	8.0"	8.0"											
		95	18.0"	16.0"	14.0"	13.0"	12.0"	11.0"	11.0"	10.0"	10.0"	9.0"	9.0"	8.0"	8.0"	8.0"												
		100	17.0"	15.0"	14.0"	13.0"	12.0"	11.0"	10.0"	10.0"	9.0"	9.0"	8.0"	8.0"	8.0"													
		105	17.0"	15.0"	13.0"	12.0"	11.0"	11.0"	10.0"	9.0"	9.0"	8.0"	8.0"	8.0"														
		110	16.0"	14.0"	13.0"	12.0"	11.0"	10.0"	10.0"	9.0"	9.0"	8.0"	8.0"															
		115	15.0"	14.0"	13.0"	12.0"	11.0"	10.0"	9.0"	9.0"	8.0"	8.0"																
		120	15.0"	13.0"	12.0"	11.0"	10.0"	10.0"	9.0"	8.0"	8.0"	8.0"																
		125	15.0"	13.0"	12.0"	11.0"	10.0"	9.0"	9.0"	8.0"	8.0"																	
		130	14.0"	13.0"	11.0"	11.0"	10.0"	9.0"	8.0"	8.0"	8.0"																	

HOST STRUCT.	ANCHOR TYPE	LOAD (psf)	SPANS 16' ≤ 16'-6"	SPANS 16'-7" ≤ 17'	SPANS 17' ≤ 17'-6"	SPANS 17'-7" ≤ 18'	SPANS 18' ≤ 18'-6"	SPANS 18'-7" ≤ 19'	SPANS 19' ≤ 19'-6"	SPANS 19'-7" ≤ 20'	SPANS 20' ≤ 20'-6"	SPANS 20'-7" ≤ 21'	SPANS 21' ≤ 21'-6"	SPANS 21'-7" ≤ 22'	SPANS 22' ≤ 22'-6"	SPANS 22'-7" ≤ 23'	SPANS 23' ≤ 23'-6"	SPANS 23'-7" ≤ 24'	SPANS 24' ≤ 24'-6"	SPANS 24'-7" ≤ 25'	SPANS 25' ≤ 25'-6"	SPANS 25'-7" ≤ 26'	SPANS 26' ≤ 26'-6"	SPANS 26'-7" ≤ 27'	SPANS 27' ≤ 27'-6"	SPANS 27'-7" ≤ 28'	SPANS 28' ≤ 28'-6"	SPANS 28'-7" ≤ 29'	SPANS 29' ≤ 29'-6"	SPANS 29'-7" ≤ 30'
			3 1/8" MIN EDGE DISTANCE																										
CONCRETE	5/16" ELCO ULTRACON HFH 2" EMBEDMENT (3500 PSI CONC)	30	18.0"	18.0"	18.0"	18.0"	18.0"	18.0"	18.0"	18.0"	18.0"	18.0"	18.0"	18.0"	18.0"	18.0"	17.0"	17.0"	17.0"	17.0"	17.0"	17.0"	16.0"	16.0"	16.0"	16.0"	16.0"	16.0"
		35	18.0"	18.0"	18.0"	18.0"	18.0"	18.0"	18.0"	18.0"	17.0"	17.0"	17.0"	17.0"	16.0"	16.0"	16.0"	16.0"	15.0"	15.0"	15.0"	15.0"	15.0"	15.0"	14.0"	14.0"	14.0"	14.0"
		40	18.0"	18.0"	18.0"	17.0"	17.0"	17.0"	16.0"	16.0"	16.0"	16.0"	15.0"	15.0"	15.0"	15.0"	14.0"	14.0"	14.0"	14.0"	14.0"	13.0"	14.0"	13.0"	13.0"	13.0"	13.0"	13.0"
		45	17.0"	17.0"	16.0"	16.0"	16.0"	15.0"	15.0"	15.0"	14.0"	14.0"	14.0"	14.0"	14.0"	13.0"	13.0"	13.0"	13.0"	13.0"	12.0"	12.0"	12.0"	12.0"	12.0"	12.0"	12.0"	12.0"
		50	16.0"	15.0"	15.0"	15.0"	14.0"	14.0"	14.0"	14.0"	13.0"	13.0"	13.0"	13.0"	12.0"	12.0"	12.0"	12.0"	12.0"	12.0"	11.0"	11.0"	11.0"	11.0"	11.0"	11.0"	11.0"	11.0"
		55	15.0"	14.0"	14.0"	14.0"	13.0"	13.0"	13.0"	13.0"	12.0"	12.0"	12.0"	12.0"	11.0"	11.0"	11.0"	11.0"	11.0"	11.0"	11.0"	10.0"	10.0"	10.0"	10.0"	10.0"	10.0"	10.0"
		60	14.0"	13.0"	13.0"	13.0"	13.0"	12.0"	12.0"	12.0"	12.0"	11.0"	11.0"	11.0"	11.0"	11.0"	11.0"	10.0"	10.0"	10.0"	10.0"	10.0"	10.0"	10.0"	10.0"	9.0"	9.0"	9.0"	9.0"
			2 1/2" MIN EDGE DISTANCE																										
	1/4" ELCO ULTRACON HFH 1-3/4" EMBEDMENT (3000 PSI CONC)	30	12.0"	12.0"	11.0"	11.0"	11.0"	11.0"	11.0"	10.0"	10.0"	10.0"	10.0"	10.0"	9.0"	9.0"	9.0"	9.0"	9.0"	9.0"	9.0"	9.0"	9.0"	9.0"	8.0"	8.0"	8.0"	8.0"	8.0"
		35	11.0"	10.0"	10.0"	10.0"	10.0"	10.0"	9.0"	9.0"	9.0"	9.0"	9.0"	9.0"	8.0"	8.0"	8.0"	8.0"	8.0"	8.0"	8.0"	8.0"	8.0"	8.0"					
		40	10.0"	9.0"	9.0"	9.0"	9.0"	9.0"	8.0"	8.0"	8.0"	8.0"	8.0"	8.0"	8.0"														
		45	9.0"	9.0"	8.0"	8.0"	8.0"	8.0"	8.0"	8.0"																			
		50	8.0"	8.0"	8.0"	8.0"																							
		55	8.0"																										
		60																											

NOTES:
1. THE SPACING ON THIS CHART APPLIES ONLY TO THE INSTALLATION OF STRAP BRACKETS.

FRANK L. BENNARDO, P.E.
PE# 0046549
10/20/2017
IF FOUND, CERTIFICATE VALID UNDER SEALS BELOW
FRANK L. BENNARDO, P.E.
46549
FRANK L. BENNARDO LICENSED No PE0046549 PROFESSIONAL ENGINEER STATE OF FLORIDA

ENGINEERING EXPRESS®
CORPORATE OFFICE:
160 SW 12th AVE, SUITE 106
DEERFIELD BEACH, FL 33442
P: (954) 354-0660 F: (954) 354-0443
E: HELLO@ENGINEERINGEXPRESS.COM
ENGINEERINGEXPRESS.COM
CERT OF AUTH #9885

STORM SMART INDUSTRIES, INC.
6182 IDLEWILD STREET
FORT MYERS , FL
(239) 938-1000

STORM CATCHER WIND ABATEMENT SYSTEM FL11291.2 HVHZ
-
-, FL

REMARKS	DRWN	CHKD	DATE
INIT ISSUE	RWN	FLB	10/18/17

THIS DOCUMENT IS THE PROPERTY OF ENGINEERING EXPRESS, AND SHALL NOT BE REPRODUCED IN WHOLE OR PART WITHOUT WRITTEN CONSENT OF ENGINEERING EXPRESS. ALTERATIONS, ADDITIONS, OR OTHER MARKINGS TO THIS DOCUMENT ARE NOT PERMITTED AND INVALIDATE OUR CERTIFICATION.

COPYRIGHT ENGINEERING EXPRESS®

16-3080

SCALE: NTS UNLESS NOTED

V:\Projects\16-3080 Storm Catcher Wind Abatement System FL11291-R4\WP\2017 FBC Update\16-3080e-Dwg-112912.dwg
10/20/2017 - 3:07pm zachr

TABLE 12- GROUT FILLED BLOCK

$\frac{5}{16}$"& $\frac{1}{4}$" ELCO ULTRACON HFH; $\frac{1}{4}$" PANELMATE INSERT

HOST STRUCT.	ANCHOR TYPE	LOAD (psf)	SPANS 0" ≤ 3'	SPANS 3' ≤ 3'-6"	SPANS 0" ≤ 3'	SPANS 3' ≤ 3'-6"	SPANS 4'-7" ≤ 5'	SPANS 5' ≤ 5'-6"	SPANS 5'-7" ≤ 6'	SPANS 6' ≤ 6'-6"	SPANS 6'-7" ≤ 7'	SPANS 7' ≤ 7'-6"	SPANS 7'-7" ≤ 8'	SPANS 8' ≤ 8'-6"	SPANS 8'-7" ≤ 9'	SPANS 9' ≤ 9'-6"	SPANS 9'-7" ≤ 10'	SPANS 10' ≤ 10'-6"	SPANS 10'-7" ≤ 11'	SPANS 11' ≤ 11'-6"	SPANS 11'-7" ≤ 12'	SPANS 12' ≤ 12'-6"	SPANS 12'-7" ≤ 13'	SPANS 13' ≤ 13'-6"	SPANS 13'-7" ≤ 14'	SPANS 14' ≤ 14'-6"	SPANS 14'-7" ≤ 15'	SPANS 15' ≤ 15'-6"	SPANS 15'-7" ≤ 16'
			2 1/2" MIN EDGE DISTANCE																										
GROUT-FILLED BLOCK	5/16" ELCO ULTRACON HFH 2-1/4" EMBEDMENT	30	12.0"	12.0"	12.0"	12.0"	11.0"	10.0"	10.0"	9.0"	9.0"	8.0"	8.0"	8.0"	7.0"	7.0"	7.0"	6.0"	6.0"	6.0"	6.0"	6.0"	5.0"	5.0"	5.0"	5.0"	5.0"	5.0"	5.0"
		35	12.0"	12.0"	12.0"	11.0"	10.0"	9.0"	9.0"	8.0"	8.0"	7.0"	7.0"	7.0"	6.0"	6.0"	6.0"	6.0"	5.0"	5.0"	5.0"	5.0"	5.0"	5.0"	5.0"				
		40	12.0"	12.0"	11.0"	10.0"	9.0"	8.0"	8.0"	7.0"	7.0"	7.0"	6.0"	6.0"	6.0"	6.0"	5.0"	5.0"	5.0"	5.0"	5.0"								
		45	12.0"	11.0"	10.0"	9.0"	8.0"	8.0"	7.0"	7.0"	6.0"	6.0"	6.0"	6.0"	5.0"	5.0"	5.0"	5.0"											
		50	11.0"	10.0"	9.0"	8.0"	8.0"	7.0"	7.0"	6.0"	6.0"	6.0"	5.0"	5.0"	5.0"	5.0"													
		55	10.0"	9.0"	8.0"	8.0"	7.0"	7.0"	6.0"	6.0"	5.0"	5.0"	5.0"	5.0"															
		60	10.0"	9.0"	8.0"	7.0"	7.0"	6.0"	6.0"	5.0"	5.0"	5.0"	5.0"																
		65	9.0"	8.0"	7.0"	7.0"	6.0"	6.0"	5.0"	5.0"	5.0"	5.0"																	
		70	9.0"	8.0"	7.0"	6.0"	6.0"	5.0"	5.0"	5.0"	5.0"																		
		75	8.0"	7.0"	7.0"	6.0"	6.0"	5.0"	5.0"	5.0"																			
		80	8.0"	7.0"	6.0"	6.0"	5.0"	5.0"	5.0"																				
		85	8.0"	7.0"	6.0"	6.0"	5.0"	5.0"																					
		90	7.0"	6.0"	6.0"	5.0"	5.0"																						
		95	7.0"	6.0"	6.0"	5.0"	5.0"																						
		100	7.0"	6.0"	5.0"	5.0"																							
		105	6.0"	6.0"	5.0"	5.0"																							
		110	6.0"	5.0"	5.0"																								
		115	6.0"	5.0"	5.0"																								
		120	6.0"	5.0"	5.0"																								
		125	6.0"	5.0"																									
		130	5.0"	5.0"																									
			2 1/2" MIN EDGE DISTANCE																										
	1/4" ELCO ULTRACON HFH 2-1/4" EMBEDMENT	30	11.0"	10.0"	9.0"	8.0"	8.0"	7.0"	7.0"	6.0"	6.0"	6.0"	5.0"	5.0"	5.0"	5.0"	5.0"	4.0"	4.0"	4.0"	4.0"	4.0"	4.0"	4.0"	4.0"				
		35	10.0"	9.0"	8.0"	7.0"	7.0"	6.0"	6.0"	6.0"	5.0"	5.0"	5.0"	5.0"	4.0"	4.0"	4.0"	4.0"	4.0"	4.0"	4.0"								
		40	9.0"	8.0"	7.0"	7.0"	6.0"	6.0"	5.0"	5.0"	5.0"	5.0"	4.0"	4.0"	4.0"	4.0"	4.0"	4.0"											
		45	8.0"	7.0"	7.0"	6.0"	6.0"	5.0"	5.0"	5.0"	4.0"	4.0"	4.0"	4.0"	4.0"														
		50	8.0"	7.0"	6.0"	6.0"	5.0"	5.0"	5.0"	4.0"	4.0"	4.0"	4.0"	4.0"															
		55	7.0"	6.0"	6.0"	5.0"	5.0"	5.0"	4.0"	4.0"	4.0"	4.0"																	
		60	7.0"	6.0"	5.0"	5.0"	5.0"	4.0"	4.0"	4.0"	4.0"																		
		65	6.0"	6.0"	5.0"	5.0"	4.0"	4.0"	4.0"	4.0"																			
		70	6.0"	5.0"	5.0"	4.0"	4.0"	4.0"	4.0"																				
		75	6.0"	5.0"	5.0"	4.0"	4.0"	4.0"																					
		80	5.0"	5.0"	4.0"	4.0"	4.0"																						
		85	5.0"	5.0"	4.0"	4.0"	4.0"																						
		90	5.0"	4.0"	4.0"	4.0"																							
		95	5.0"	4.0"	4.0"																								
		100	5.0"	4.0"	4.0"																								
		105	4.0"	4.0"	4.0"																								
		110	4.0"	4.0"																									
		115	4.0"	4.0"																									
		120	4.0"	4.0"																									
		125	4.0"																										
		130	4.0"																										
			4" MIN EDGE DISTANCE																										
	1/4" PANELMATE INSERT 1-1/2" EMBEDMENT (2676 PSI CONC)	30	12.0"	12.0"	12.0"	12.0"	12.0"	12.0"	12.0"	12.0"	12.0"	12.0"	12.0"	11.0"	11.0"	10.0"	10.0"	10.0"	9.0"	9.0"	9.0"	8.0"	8.0"	8.0"	8.0"	8.0"	7.0"	7.0"	7.0"
		35	12.0"	12.0"	12.0"	12.0"	12.0"	12.0"	12.0"	12.0"	12.0"	11.0"	11.0"	10.0"	10.0"	9.0"	9.0"	9.0"	8.0"	8.0"	8.0"	8.0"	7.0"	7.0"	7.0"	7.0"	7.0"	6.0"	6.0"
		40	12.0"	12.0"	12.0"	12.0"	12.0"	12.0"	12.0"	11.0"	11.0"	10.0"	10.0"	9.0"	9.0"	8.0"	8.0"	8.0"	7.0"	7.0"	7.0"	7.0"	7.0"	6.0"	6.0"	6.0"	6.0"	6.0"	6.0"
		45	12.0"	12.0"	12.0"	12.0"	12.0"	12.0"	11.0"	10.0"	10.0"	9.0"	9.0"	8.0"	8.0"	8.0"	7.0"	7.0"	7.0"	7.0"	6.0"	6.0"	6.0"	6.0"	6.0"	5.0"	5.0"	5.0"	5.0"
		50	12.0"	12.0"	12.0"	12.0"	11.0"	11.0"	10.0"	9.0"	9.0"	8.0"	8.0"	8.0"	7.0"	7.0"	7.0"	7.0"	6.0"	6.0"	6.0"	6.0"	5.0"	5.0"	5.0"	5.0"	5.0"	5.0"	5.0"
		55	12.0"	12.0"	12.0"	12.0"	11.0"	10.0"	9.0"	9.0"	8.0"	8.0"	7.0"	7.0"	7.0"	7.0"	6.0"	6.0"	6.0"	6.0"	5.0"	5.0"	5.0"	5.0"	5.0"	5.0"	5.0"	4.0"	4.0"
		60	12.0"	12.0"	12.0"	11.0"	10.0"	9.0"	9.0"	8.0"	8.0"	7.0"	7.0"	7.0"	6.0"	6.0"	6.0"	6.0"	5.0"	5.0"	5.0"	5.0"	5.0"	5.0"	4.0"	4.0"	4.0"	4.0"	4.0"
		65	12.0"	12.0"	11.0"	10.0"	9.0"	9.0"	8.0"	8.0"	7.0"	7.0"	7.0"	6.0"	6.0"	6.0"	5.0"	5.0"	5.0"	5.0"	5.0"	5.0"	4.0"	4.0"	4.0"	4.0"	4.0"	4.0"	4.0"
		70	12.0"	12.0"	11.0"	10.0"	9.0"	8.0"	8.0"	7.0"	7.0"	7.0"	6.0"	6.0"	6.0"	5.0"	5.0"	5.0"	5.0"	5.0"	4.0"	4.0"	4.0"	4.0"	4.0"	4.0"	4.0"	4.0"	
		75	12.0"	11.0"	10.0"	9.0"	8.0"	8.0"	7.0"	7.0"	7.0"	6.0"	6.0"	6.0"	5.0"	5.0"	5.0"	5.0"	5.0"	5.0"	4.0"	4.0"	4.0"	4.0"	4.0"	4.0"			
		80	12.0"	11.0"	10.0"	9.0"	8.0"	7.0"	7.0"	7.0"	6.0"	6.0"	6.0"	5.0"	5.0"	5.0"	5.0"	4.0"	4.0"	4.0"	4.0"	4.0"	4.0"	4.0"					
		85	11.0"	10.0"	9.0"	8.0"	8.0"	7.0"	7.0"	6.0"	6.0"	6.0"	5.0"	5.0"	5.0"	5.0"	4.0"	4.0"	4.0"	4.0"	4.0"	4.0"	4.0"						
		90	11.0"	10.0"	9.0"	8.0"	7.0"	7.0"	6.0"	6.0"	6.0"	5.0"	5.0"	5.0"	5.0"	4.0"	4.0"	4.0"	4.0"	4.0"	4.0"	4.0"							
		95	10.0"	9.0"	8.0"	8.0"	7.0"	7.0"	6.0"	6.0"	5.0"	5.0"	5.0"	5.0"	4.0"	4.0"	4.0"	4.0"	4.0"	4.0"	4.0"								
		100	10.0"	9.0"	8.0"	7.0"	7.0"	6.0"	6.0"	5.0"	5.0"	5.0"	5.0"	4.0"	4.0"	4.0"	4.0"	4.0"	4.0"	4.0"									
		105	10.0"	9.0"	8.0"	7.0"	7.0"	6.0"	6.0"	5.0"	5.0"	5.0"	4.0"	4.0"	4.0"	4.0"	4.0"	4.0"											
		110	9.0"	8.0"	7.0"	7.0"	6.0"	6.0"	5.0"	5.0"	5.0"	5.0"	4.0"	4.0"	4.0"	4.0"	4.0"												
		115	9.0"	8.0"	7.0"	7.0"	6.0"	6.0"	5.0"	5.0"	5.0"	4.0"	4.0"	4.0"	4.0"	4.0"													
		120	9.0"	8.0"	7.0"	6.0"	6.0"	5.0"	5.0"	5.0"	4.0"	4.0"	4.0"	4.0"	4.0"														
		125	8.0"	8.0"	7.0"	6.0"	6.0"	5.0"	5.0"	5.0"	4.0"	4.0"	4.0"	4.0"															
		130	8.0"	7.0"	7.0"	6.0"	5.0"	5.0"	5.0"	4.0"	4.0"	4.0"	4.0"	4.0"															

HOST STRUCT.	ANCHOR TYPE	LOAD (psf)	SPANS 16' ≤ 16'-6"	SPANS 16'-7" ≤ 17'	SPANS 17' ≤ 17'-6"	SPANS 17'-7" ≤ 18'	SPANS 18' ≤ 18'-6"	SPANS 18'-7" ≤ 19'	SPANS 19' ≤ 19'-6"	SPANS 19'-7" ≤ 20'	SPANS 20' ≤ 20'-6"	SPANS 20'-7" ≤ 21'	SPANS 21' ≤ 21'-6"	SPANS 21'-7" ≤ 22'	SPANS 22' ≤ 22'-6"	SPANS 22'-7" ≤ 23'	SPANS 23' ≤ 23'-6"	SPANS 23'-7" ≤ 24'	SPANS 24' ≤ 24'-6"	SPANS 24'-7" ≤ 25'	SPANS 25' ≤ 25'-6"	SPANS 25'-7" ≤ 26'	SPANS 26' ≤ 26'-6"	SPANS 26'-7" ≤ 27'	SPANS 27' ≤ 27'-6"	SPANS 27'-7" ≤ 28'	SPANS 28' ≤ 28'-6"	SPANS 28'-7" ≤ 29'	SPANS 29' ≤ 29'-6"	SPANS 29'-7" ≤ 30'
			4" MIN EDGE DISTANCE																										
GROUT-FILLED BLOCK	1/4" PANELMATE INSERT 1-1/2" EMBEDMENT (2676 PSI CONC)	30	7.0"	7.0"	7.0"	6.0"	6.0"	6.0"	6.0"	6.0"	6.0"	6.0"	6.0"	5.0"	5.0"	5.0"	5.0"	5.0"	5.0"	5.0"	5.0"	5.0"	5.0"	5.0"	5.0"	5.0"	5.0"	5.0"	4.0"
		35	6.0"	6.0"	6.0"	6.0"	6.0"	5.0"	5.0"	5.0"	5.0"	5.0"	5.0"	5.0"	5.0"	5.0"	5.0"	4.0"	4.0"	4.0"	4.0"	4.0"	4.0"	4.0"	4.0"	4.0"	4.0"	4.0"	4.0"
		40	5.0"	5.0"	5.0"	5.0"	5.0"	5.0"	5.0"	5.0"	5.0"	4.0"	4.0"	4.0"	4.0"	4.0"	4.0"	4.0"	4.0"	4.0"	4.0"	4.0"	4.0"	4.0"	4.0"	4.0"	4.0"	4.0"	
		45	5.0"	5.0"	5.0"	5.0"	5.0"	4.0"	4.0"	4.0"	4.0"	4.0"	4.0"	4.0"	4.0"	4.0"	4.0"	4.0"	4.0"	4.0"	4.0"	4.0"							
		50	5.0"	4.0"	4.0"	4.0"	4.0"	4.0"	4.0"	4.0"	4.0"	4.0"	4.0"	4.0"	4.0"														
		55	4.0"	4.0"	4.0"	4.0"	4.0"	4.0"	4.0"	4.0"	4.0"																		
		60	4.0"	4.0"	4.0"	4.0"	4.0"																						

NOTES:

1. APPROVED FOR USE ATTACHING GROMMET SCREENS & ALL TRACKS OR STUDDED ANGLE WITH ¼" SIDEWALK BOLT

FRANK L. BENNARDO, P.E.
PE# 0046549
10/20/2017
IF CHECKED, CERTIFICATE PER PARAGRAPH 61G15-30.001(4)(b)
FRANK L. BENNARDO, P.E.
46549
STATE OF FLORIDA
PROFESSIONAL ENGINEER

ENGINEERING EXPRESS®
CORPORATE OFFICE:
160 SW 12th AVE, SUITE 306
DEERFIELD BEACH, FL 33442
P: (954) 354-0660 F: (954) 354-0443
E: HELLO@ENGINEERINGEXPRESS.COM
ENGINEERINGEXPRESS.COM
CERT OF AUTH #9885

STORM SMART INDUSTRIES, INC.
6182 IDLEWILD STREET
FORT MYERS , FL
(239) 938-1000

STORM CATCHER WIND ABATEMENT SYSTEM FL11291.2 HVHZ
-
-, FL

REMARKS	DRWN	CHKD	DATE
INIT ISSUE	RWN	FLB	10/18/17

THIS DOCUMENT IS THE PROPERTY OF ENGINEERING EXPRESS, AND SHALL NOT BE REPRODUCED IN WHOLE OR PART WITHOUT WRITTEN CONSENT OF ENGINEERING EXPRESS. ALTERATIONS, ADDITIONS, OR OTHER MARKINGS TO THIS DOCUMENT ARE NOT PERMITTED AND INVALIDATE OUR CERTIFICATION.

COPYRIGHT ENGINEERING EXPRESS®

16-3080

SCALE: NTS UNLESS NOTED

10/20/2017 - 3:07pm zachr V:\Projects\16-3080 Storm Catcher Wind Abatement System FL11291-R4\WP\2017 FBC Update\16-3080e-Dwg-11291.2.dwg

TABLE 13 - GROUT FILLED BLOCK

$\frac{1}{2}$" & $\frac{3}{8}$" POWERS HOLLOW-SET

HOST STRUCT.: GROUT-FILLED BLOCK

ANCHOR TYPE	LOAD (psf)	SPANS 0" ≤ 3'	SPANS 3' ≤ 3'-6"	SPANS 3'-7" ≤ 4'	SPANS 4' ≤ 4'-6"	SPANS 4'-7" ≤ 5'	SPANS 5' ≤ 5'-6"	SPANS 5'-7" ≤ 6'	SPANS 6' ≤ 6'-6"	SPANS 6'-7" ≤ 7'	SPANS 7' ≤ 7'-6"	SPANS 7'-7" ≤ 8'	SPANS 8' ≤ 8'-6"	SPANS 8'-7" ≤ 9'	SPANS 9' ≤ 9'-6"	SPANS 9'-7" ≤ 10'	SPANS 10' ≤ 10'-6"	SPANS 10'-7" ≤ 11'	SPANS 11' ≤ 11'-6"	SPANS 11'-7" ≤ 12'	SPANS 12' ≤ 12'-6"	SPANS 12'-7" ≤ 13'	SPANS 13' ≤ 13'-6"	SPANS 13'-7" ≤ 14'	SPANS 14' ≤ 14'-6"	SPANS 14'-7" ≤ 15'	SPANS 15' ≤ 15'-6"	SPANS 15'-7" ≤ 16'
		5" MIN EDGE DISTANCE																									
1/2" POWERS HOLLOW-SET 1-1/2" EMBEDMENT (1500 PSI BLOCK)	30	12.0"	12.0"	12.0"	12.0"	12.0"	12.0"	12.0"	12.0"	12.0"	12.0"	12.0"	12.0"	12.0"	12.0"	12.0"	12.0"	12.0"	12.0"	12.0"	12.0"	12.0"	12.0"	12.0"	12.0"	12.0"	11.0"	11.0"
	35	12.0"	12.0"	12.0"	12.0"	12.0"	12.0"	12.0"	12.0"	12.0"	12.0"	12.0"	12.0"	12.0"	12.0"	12.0"	12.0"	12.0"	12.0"	12.0"	12.0"	11.0"	11.0"	11.0"	11.0"	10.0"	10.0"	10.0"
	40	12.0"	12.0"	12.0"	12.0"	12.0"	12.0"	12.0"	12.0"	12.0"	12.0"	12.0"	12.0"	12.0"	12.0"	12.0"	12.0"	11.0"	11.0"	11.0"	11.0"	10.0"	10.0"	10.0"	10.0"	9.0"	9.0"	9.0"
	45	12.0"	12.0"	12.0"	12.0"	12.0"	12.0"	12.0"	12.0"	12.0"	12.0"	12.0"	12.0"	12.0"	12.0"	12.0"	11.0"	11.0"	10.0"	10.0"	10.0"	9.0"	9.0"	9.0"	9.0"	8.0"	8.0"	8.0"
	50	12.0"	12.0"	12.0"	12.0"	12.0"	12.0"	12.0"	12.0"	12.0"	12.0"	12.0"	12.0"	12.0"	11.0"	11.0"	10.0"	10.0"	10.0"	9.0"	9.0"	9.0"	8.0"	8.0"	8.0"	8.0"	8.0"	7.0"
	55	12.0"	12.0"	12.0"	12.0"	12.0"	12.0"	12.0"	12.0"	12.0"	12.0"	12.0"	11.0"	11.0"	10.0"	10.0"	10.0"	9.0"	9.0"	9.0"	8.0"	8.0"	8.0"	8.0"	7.0"	7.0"	7.0"	7.0"
	60	12.0"	12.0"	12.0"	12.0"	12.0"	12.0"	12.0"	12.0"	12.0"	12.0"	11.0"	10.0"	10.0"	10.0"	9.0"	9.0"	9.0"	8.0"	8.0"	8.0"	8.0"	7.0"	7.0"	7.0"	7.0"	7.0"	6.0"
	65	12.0"	12.0"	12.0"	12.0"	12.0"	12.0"	12.0"	12.0"	11.0"	11.0"	10.0"	10.0"	10.0"	9.0"	9.0"	9.0"	8.0"	8.0"	8.0"	7.0"	7.0"	7.0"	7.0"	6.0"	6.0"	6.0"	6.0"
	70	12.0"	12.0"	12.0"	12.0"	12.0"	12.0"	12.0"	11.0"	11.0"	10.0"	10.0"	9.0"	9.0"	9.0"	8.0"	8.0"	8.0"	7.0"	7.0"	7.0"	7.0"	6.0"	6.0"	6.0"	6.0"	6.0"	6.0"
	75	12.0"	12.0"	12.0"	12.0"	12.0"	12.0"	12.0"	11.0"	10.0"	10.0"	9.0"	9.0"	8.0"	8.0"	8.0"	7.0"	7.0"	7.0"	7.0"	7.0"	6.0"	6.0"	6.0"	6.0"	6.0"	5.0"	5.0"
	80	12.0"	12.0"	12.0"	12.0"	12.0"	12.0"	11.0"	10.0"	10.0"	9.0"	9.0"	8.0"	8.0"	8.0"	7.0"	7.0"	7.0"	7.0"	6.0"	6.0"	6.0"	6.0"	6.0"	5.0"	5.0"	5.0"	5.0"
	85	12.0"	12.0"	12.0"	12.0"	12.0"	11.0"	10.0"	10.0"	9.0"	9.0"	8.0"	8.0"	8.0"	7.0"	7.0"	7.0"	7.0"	6.0"	6.0"	6.0"	6.0"	6.0"	5.0"	5.0"	5.0"	5.0"	5.0"
	90	12.0"	12.0"	12.0"	12.0"	12.0"	11.0"	10.0"	9.0"	9.0"	8.0"	8.0"	8.0"	7.0"	7.0"	7.0"	6.0"	6.0"	6.0"	6.0"	6.0"	5.0"	5.0"	5.0"	5.0"	5.0"	5.0"	5.0"
	95	12.0"	12.0"	12.0"	12.0"	11.0"	10.0"	10.0"	9.0"	9.0"	8.0"	8.0"	7.0"	7.0"	7.0"	6.0"	6.0"	6.0"	6.0"	6.0"	5.0"	5.0"	5.0"	5.0"	5.0"	5.0"		
	100	12.0"	12.0"	12.0"	12.0"	11.0"	10.0"	9.0"	9.0"	8.0"	8.0"	7.0"	7.0"	7.0"	6.0"	6.0"	6.0"	6.0"	6.0"	5.0"	5.0"	5.0"	5.0"	5.0"	5.0"			
	105	12.0"	12.0"	12.0"	11.0"	10.0"	10.0"	9.0"	8.0"	8.0"	7.0"	7.0"	7.0"	6.0"	6.0"	6.0"	6.0"	6.0"	5.0"	5.0"	5.0"	5.0"	5.0"	5.0"				
	110	12.0"	12.0"	12.0"	11.0"	10.0"	9.0"	9.0"	8.0"	8.0"	7.0"	7.0"	7.0"	6.0"	6.0"	6.0"	6.0"	5.0"	5.0"	5.0"	5.0"	5.0"						
	115	12.0"	12.0"	11.0"	10.0"	10.0"	9.0"	8.0"	8.0"	7.0"	7.0"	7.0"	6.0"	6.0"	6.0"	6.0"	5.0"	5.0"	5.0"	5.0"	5.0"							
	120	12.0"	12.0"	11.0"	10.0"	9.0"	9.0"	8.0"	8.0"	7.0"	7.0"	6.0"	6.0"	6.0"	6.0"	5.0"	5.0"	5.0"	5.0"	5.0"								
	125	12.0"	12.0"	11.0"	10.0"	9.0"	8.0"	8.0"	7.0"	7.0"	7.0"	6.0"	6.0"	6.0"	5.0"	5.0"	5.0"	5.0"	5.0"									
	130	12.0"	11.0"	10.0"	9.0"	9.0"	8.0"	8.0"	7.0"	7.0"	6.0"	6.0"	6.0"	5.0"	5.0"	5.0"	5.0"	5.0"										
		4" MIN EDGE DISTANCE																									
3/8" POWERS HOLLOW-SET 1-1/4" EMBEDMENT (1500 PSI BLOCK)	30	12.0"	12.0"	12.0"	12.0"	12.0"	12.0"	12.0"	12.0"	12.0"	12.0"	12.0"	12.0"	11.0"	11.0"	10.0"	10.0"	9.0"	9.0"	9.0"	9.0"	8.0"	8.0"	8.0"	8.0"	7.0"	7.0"	
	35	12.0"	12.0"	12.0"	12.0"	12.0"	12.0"	12.0"	12.0"	12.0"	12.0"	11.0"	11.0"	10.0"	10.0"	9.0"	9.0"	9.0"	8.0"	8.0"	8.0"	8.0"	7.0"	7.0"	7.0"	7.0"	7.0"	6.0"
	40	12.0"	12.0"	12.0"	12.0"	12.0"	12.0"	12.0"	12.0"	11.0"	10.0"	10.0"	9.0"	9.0"	9.0"	8.0"	8.0"	7.0"	7.0"	7.0"	7.0"	7.0"	7.0"	6.0"	6.0"	6.0"	6.0"	6.0"
	45	12.0"	12.0"	12.0"	12.0"	12.0"	12.0"	11.0"	11.0"	10.0"	10.0"	9.0"	9.0"	8.0"	8.0"	8.0"	7.0"	7.0"	7.0"	7.0"	6.0"	6.0"	6.0"	6.0"	6.0"	5.0"	5.0"	5.0"
	50	12.0"	12.0"	12.0"	12.0"	12.0"	11.0"	10.0"	10.0"	9.0"	9.0"	8.0"	8.0"	8.0"	7.0"	7.0"	7.0"	6.0"	6.0"	6.0"	6.0"	6.0"	5.0"	5.0"	5.0"	5.0"	5.0"	5.0"
	55	12.0"	12.0"	12.0"	12.0"	11.0"	10.0"	10.0"	9.0"	9.0"	8.0"	8.0"	7.0"	7.0"	7.0"	7.0"	6.0"	6.0"	6.0"	6.0"	5.0"	5.0"	5.0"	5.0"	5.0"	5.0"	5.0"	
	60	12.0"	12.0"	12.0"	11.0"	10.0"	10.0"	9.0"	9.0"	8.0"	8.0"	7.0"	7.0"	7.0"	6.0"	6.0"	6.0"	6.0"	5.0"	5.0"	5.0"	5.0"	5.0"	5.0"				
	65	12.0"	12.0"	12.0"	11.0"	10.0"	9.0"	9.0"	8.0"	8.0"	7.0"	7.0"	6.0"	6.0"	6.0"	6.0"	6.0"	5.0"	5.0"	5.0"	5.0"	5.0"	5.0"					
	70	12.0"	12.0"	11.0"	10.0"	9.0"	9.0"	8.0"	8.0"	7.0"	7.0"	6.0"	6.0"	6.0"	6.0"	5.0"	5.0"	5.0"	5.0"	5.0"	5.0"							
	75	12.0"	12.0"	10.0"	10.0"	9.0"	8.0"	8.0"	7.0"	7.0"	6.0"	6.0"	6.0"	5.0"	5.0"	5.0"	5.0"	5.0"	5.0"									
	80	12.0"	11.0"	10.0"	9.0"	8.0"	8.0"	7.0"	7.0"	6.0"	6.0"	6.0"	5.0"	5.0"	5.0"	5.0"	5.0"											
	85	12.0"	11.0"	9.0"	9.0"	8.0"	7.0"	7.0"	6.0"	6.0"	6.0"	5.0"	5.0"	5.0"	5.0"	5.0"												
	90	11.0"	10.0"	9.0"	8.0"	8.0"	7.0"	7.0"	6.0"	6.0"	5.0"	5.0"	5.0"	5.0"	5.0"													
	95	11.0"	10.0"	9.0"	8.0"	7.0"	7.0"	6.0"	6.0"	6.0"	5.0"	5.0"	5.0"	5.0"														
	100	10.0"	9.0"	8.0"	8.0"	7.0"	6.0"	6.0"	6.0"	5.0"	5.0"	5.0"	5.0"															
	105	10.0"	9.0"	8.0"	7.0"	7.0"	6.0"	6.0"	5.0"	5.0"	5.0"	5.0"																
	110	10.0"	9.0"	8.0"	7.0"	6.0"	6.0"	6.0"	5.0"	5.0"	5.0"																	
	115	9.0"	8.0"	7.0"	7.0"	6.0"	6.0"	5.0"	5.0"	5.0"																		
	120	9.0"	8.0"	7.0"	7.0"	6.0"	6.0"	5.0"	5.0"	5.0"																		
	125	9.0"	8.0"	7.0"	6.0"	6.0"	5.0"	5.0"	5.0"																			
	130	9.0"	8.0"	7.0"	6.0"	6.0"	5.0"	5.0"	5.0"																			

HOST STRUCT.: GROUT-FILLED BLOCK

ANCHOR TYPE	LOAD (psf)	SPANS 16' ≤ 16'-6"	SPANS 16'-7" ≤ 17'	SPANS 17' ≤ 17'-6"	SPANS 17'-7" ≤ 18'	SPANS 18' ≤ 18'-6"	SPANS 18'-7" ≤ 19'	SPANS 19' ≤ 19'-6"	SPANS 19'-7" ≤ 20'	SPANS 20' ≤ 20'-6"	SPANS 20'-7" ≤ 21'	SPANS 21' ≤ 21'-6"	SPANS 21'-7" ≤ 22'	SPANS 22' ≤ 22'-6"	SPANS 22'-7" ≤ 23'	SPANS 23' ≤ 23'-6"	SPANS 23'-7" ≤ 24'	SPANS 24' ≤ 24'-6"	SPANS 24'-7" ≤ 25'	SPANS 25' ≤ 25'-6"	SPANS 25'-7" ≤ 26'	SPANS 26' ≤ 26'-6"	SPANS 26'-7" ≤ 27'	SPANS 27' ≤ 27'-6"	SPANS 27'-7" ≤ 28'	SPANS 28' ≤ 28'-6"	SPANS 28'-7" ≤ 29'	SPANS 29' ≤ 29'-6"	SPANS 29'-7" ≤ 30'
		5" MIN EDGE DISTANCE																										
1/2" POWERS HOLLOW-SET 1-1/2" EMBEDMENT (1500 PSI BLOCK)	30	11.0"	10.0"	10.0"	10.0"	10.0"	10.0"	9.0"	9.0"	9.0"	9.0"	9.0"	9.0"	8.0"	8.0"	8.0"	8.0"	8.0"	8.0"	8.0"	8.0"	8.0"	8.0"	8.0"	7.0"	7.0"	7.0"	7.0"
	35	10.0"	9.0"	9.0"	9.0"	9.0"	9.0"	8.0"	8.0"	8.0"	8.0"	8.0"	8.0"	7.0"	7.0"	7.0"	7.0"	7.0"	7.0"	7.0"	7.0"	7.0"	7.0"	7.0"	6.0"	6.0"	6.0"	6.0"
	40	9.0"	8.0"	8.0"	8.0"	8.0"	8.0"	8.0"	7.0"	7.0"	7.0"	7.0"	7.0"	7.0"	7.0"	7.0"	6.0"	6.0"	6.0"	6.0"	6.0"	6.0"	6.0"	6.0"	6.0"	6.0"	6.0"	6.0"
	45	8.0"	8.0"	7.0"	7.0"	7.0"	7.0"	7.0"	7.0"	7.0"	6.0"	6.0"	6.0"	6.0"	6.0"	6.0"	6.0"	6.0"	6.0"	5.0"	6.0"	5.0"	5.0"	5.0"	5.0"	5.0"	5.0"	5.0"
	50	7.0"	7.0"	7.0"	7.0"	7.0"	6.0"	6.0"	6.0"	6.0"	6.0"	6.0"	6.0"	6.0"	6.0"	5.0"	5.0"	5.0"	5.0"	5.0"	5.0"	5.0"	5.0"	5.0"	5.0"	5.0"	5.0"	5.0"
	55	7.0"	7.0"	6.0"	6.0"	6.0"	6.0"	6.0"	6.0"	6.0"	5.0"	5.0"	5.0"	5.0"	5.0"	5.0"	5.0"	5.0"	5.0"	5.0"	5.0"	5.0"	5.0"					
	60	6.0"	6.0"	6.0"	6.0"	6.0"	6.0"	5.0"	5.0"	5.0"	5.0"	5.0"	5.0"	5.0"	5.0"	5.0"	5.0"											
		4" MIN EDGE DISTANCE																										
3/8" POWERS HOLLOW-SET 1-1/4" EMBEDMENT (1500 PSI BLOCK)	30	7.0"	7.0"	7.0"	7.0"	6.0"	6.0"	6.0"	6.0"	6.0"	6.0"	6.0"	6.0"	5.0"	5.0"	5.0"	5.0"	5.0"	5.0"	5.0"	5.0"	5.0"	5.0"	5.0"	5.0"	5.0"	5.0"	5.0"
	35	6.0"	6.0"	6.0"	6.0"	6.0"	6.0"	5.0"	5.0"	5.0"	5.0"	5.0"	5.0"	5.0"	5.0"	5.0"	5.0"											
	40	6.0"	5.0"	5.0"	5.0"	5.0"	5.0"	5.0"	5.0"	5.0"	5.0"																	
	45	5.0"	5.0"	5.0"	5.0"	5.0"	5.0"																					
	50	5.0"	5.0"																									
	55																											
	60																											

NOTES:

1. APPROVED FOR USE ATTACHING GROMMET SCREENS & ALL TRACKS OR STUDDED ANGLE WITH ¼" SIDEWALK BOLT
2. APPROVED FOR USE WITH ½" & ⅜" EYE BOLTS

FRANK L. BENNARDO, P.E.
PE# 0046549
LICENSE NO. PE0046549
10/20/2017
IF CHECKED, CERTIFYING P.E. INVERS BELOW
FRANK L. BENNARDO, P.E. 46549
STATE OF FLORIDA
PROFESSIONAL ENGINEER

ENGINEERING EXPRESS®
CORPORATE OFFICE:
160 SW 12th AVE, SUITE 106
DEERFIELD BEACH, FL 33442
P: (954) 354-0660 F: (954) 354-0443
E: HELLO@ENGINEERINGEXPRESS.COM
ENGINEERINGEXPRESS.COM
CERT OF AUTH #9885

STORM SMART INDUSTRIES, INC.
6182 IDLEWILD STREET
FORT MYERS , FL
(239) 938-1000

STORM CATCHER WIND ABATEMENT SYSTEM FL11291.2 HVHZ
-
-, FL

REMARKS	DRWN	CHKD	DATE
INIT ISSUE	RWN	FLB	10/18/17

THIS DOCUMENT IS THE PROPERTY OF ENGINEERING EXPRESS, AND SHALL NOT BE REPRODUCED IN WHOLE OR PART WITHOUT WRITTEN CONSENT OF ENGINEERING EXPRESS. ALTERATIONS, ADDITIONS, OR OTHER MARKINGS TO THIS DOCUMENT ARE NOT PERMITTED AND INVALIDATE OUR CERTIFICATION.

COPYRIGHT ENGINEERING EXPRESS®

16-3080

SCALE: NTS UNLESS NOTED

10/20/2017 - 3:08pm zachr V:\Projects\16-3080 Storm Catcher Wind Abatement System FL11291-R4\WP\2017 FBC Update\16-3080e-Dwg-112912.dwg

TABLE 14 - GROUT FILLED BLOCK

$\frac{1}{4}$" PANELMATE PRO, PLUS, TVAS & FEMALE & INSERT

HOST STRUCT.	ANCHOR TYPE	LOAD (psf)	SPANS 0" ≤ 3'	SPANS 3' ≤ 3'-6"	SPANS 3'-7" ≤ 4'	SPANS 4' ≤ 4'-6"	SPANS 4'-7" ≤ 5'	SPANS 5' ≤ 5'-6"	SPANS 5'-7" ≤ 6'	SPANS 6' ≤ 6'-6"	SPANS 6'-7" ≤ 7'	SPANS 7' ≤ 7'-6"	SPANS 7'-7" ≤ 8'	SPANS 8' ≤ 8'-6"	SPANS 8'-7" ≤ 9'	SPANS 9' ≤ 9'-6"	SPANS 9'-7" ≤ 10'	SPANS 10' ≤ 10'-6"	SPANS 10'-7" ≤ 11'	SPANS 11' ≤ 11'-6"	SPANS 11'-7" ≤ 12'	SPANS 12' ≤ 12'-6"	SPANS 12'-7" ≤ 13'	SPANS 13' ≤ 13'-6"	SPANS 13'-7" ≤ 14'	SPANS 14' ≤ 14'-6"	SPANS 14'-7" ≤ 15'	SPANS 15' ≤ 15'-6"	SPANS 15'-7" ≤ 16'
			3" MIN EDGE DISTANCE																										
GROUT-FILLED BLOCK	#14-10 PANELMATE PRO,PLUS, TVAS 1-1/4" EMBEDMENT (2000 PSI)	30	11.0"	10.0"	9.0"	8.0"	8.0"	7.0"	7.0"	6.0"	6.0"	6.0"	5.0"	5.0"	5.0"	5.0"	5.0"	4.0"	4.0"	4.0"	4.0"	4.0"	4.0"	4.0"					
		35	10.0"	9.0"	8.0"	8.0"	7.0"	6.0"	6.0"	6.0"	5.0"	5.0"	5.0"	5.0"	4.0"	4.0"	4.0"	4.0"	4.0"	4.0"									
		40	9.0"	8.0"	7.0"	7.0"	6.0"	6.0"	5.0"	5.0"	5.0"	5.0"	4.0"	4.0"	4.0"	4.0"	4.0"	4.0"											
		45	8.0"	8.0"	7.0"	6.0"	6.0"	5.0"	5.0"	5.0"	4.0"	4.0"	4.0"	4.0"	4.0"	4.0"													
		50	8.0"	7.0"	6.0"	6.0"	5.0"	5.0"	5.0"	4.0"	4.0"	4.0"	4.0"	4.0"															
		55	7.0"	6.0"	6.0"	5.0"	5.0"	5.0"	4.0"	4.0"	4.0"	4.0"																	
		60	7.0"	6.0"	5.0"	5.0"	5.0"	4.0"	4.0"	4.0"	4.0"																		
		65	6.0"	6.0"	5.0"	5.0"	4.0"	4.0"	4.0"	4.0"																			
		70	6.0"	5.0"	5.0"	4.0"	4.0"	4.0"	4.0"																				
		75	6.0"	5.0"	5.0"	4.0"	4.0"	4.0"																					
		80	5.0"	5.0"	4.0"	4.0"	4.0"																						
		85	5.0"	5.0"	4.0"	4.0"	4.0"																						
		90	5.0"	4.0"	4.0"	4.0"																							
		95	5.0"	4.0"	4.0"	4.0"																							
		100	5.0"	4.0"	4.0"																								
		105	4.0"	4.0"	4.0"																								
		110	4.0"	4.0"																									
		115	4.0"	4.0"																									
		120	4.0"	4.0"																									
		125	4.0"																										
		130	4.0"																										
			3" MIN EDGE DISTANCE																										
	#14-10 PANELMATE FEMALE ID 1-1/4" EMBEDMENT (2000 PSI)	30	9.0"	8.0"	7.0"	6.0"	6.0"	6.0"	5.0"	5.0"	5.0"	4.0"	4.0"	4.0"	4.0"	4.0"	4.0"												
		35	8.0"	7.0"	6.0"	6.0"	5.0"	5.0"	5.0"	4.0"	4.0"	4.0"	4.0"	4.0"															
		40	7.0"	6.0"	6.0"	5.0"	5.0"	4.0"	4.0"	4.0"	4.0"	4.0"																	
		45	6.0"	6.0"	5.0"	5.0"	4.0"	4.0"	4.0"	4.0"																			
		50	6.0"	5.0"	5.0"	4.0"	4.0"	4.0"	4.0"																				
		55	6.0"	5.0"	4.0"	4.0"	4.0"																						
		60	5.0"	5.0"	4.0"	4.0"	4.0"																						
		65	5.0"	4.0"	4.0"	4.0"																							
		70	5.0"	4.0"	4.0"																								
		75	4.0"	4.0"	4.0"																								
		80	4.0"	4.0"																									
		85	4.0"	4.0"																									
		90	4.0"																										
		95	4.0"																										
		100	4.0"																										
		105																											
		110																											
		115																											
		120																											
		125																											
		130																											

NOTES:

1. APPROVED FOR USE ATTACHING GROMMET SCREENS & ALL TRACKS OR STUDDED ANGLE WITH ¼" SIDEWALK BOLT

FRANK L. BENNARDO, P.E.
PE# 0046549

FRANK L. BENNARDO LICENSE No PE0046549 STATE OF FLORIDA PROFESSIONAL ENGINEER

10/20/2017

IF CHECKED, CERTIFYING P.E. APPEARS BELOW

FRANK L. BENNARDO, P.E.
46549

ENGINEERING EXPRESS®
CORPORATE OFFICE:
160 SW 12th AVE, SUITE 106
DEERFIELD BEACH, FL 33442
P: (954) 354-0660 F: (954) 354-0443
E: HELLO@ENGINEERINGEXPRESS.COM
ENGINEERINGEXPRESS.COM
CERT OF AUTH #9885

STORM SMART INDUSTRIES, INC.
6182 IDLEWILD STREET
FORT MYERS , FL
(239) 938-1000

STORM CATCHER WIND ABATEMENT SYSTEM FL11291.2 HVHZ
-
-, FL

REMARKS	DRWN	CHKD	DATE
INIT ISSUE	RWN	FLB	10/18/17

THIS DOCUMENT IS THE PROPERTY OF ENGINEERING EXPRESS, AND SHALL NOT BE REPRODUCED IN WHOLE OR PART WITHOUT WRITTEN CONSENT OF ENGINEERING EXPRESS. ALTERATIONS, ADDITIONS, OR OTHER MARKINGS TO THIS DOCUMENT ARE NOT PERMITTED AND INVALIDATE OUR CERTIFICATION.

COPYRIGHT ENGINEERING EXPRESS®

16-3080

SCALE: NTS UNLESS NOTED

10/20/2017 - 3:08pm zachr V:\Projects\16-3080 Storm Catcher Wind Abatement System FL11291-R4\WP\2017 FBC Update\16-3080e-Dwg-11291.2.dwg

TABLE 15 - GROUT FILLED BLOCK

$\frac{5}{16}$"& $\frac{1}{4}$" ELCO ULTRACON HFH STRAP BRACKET SPACING

HOST STRUCT.	ANCHOR TYPE	LOAD (psf)	SPANS 0" ≤ 3'	SPANS 3' ≤ 3'-6"	SPANS 0" ≤ 3'	SPANS 3' ≤ 3'-6"	SPANS 4'-7" ≤ 5'	SPANS 5' ≤ 5'-6"	SPANS 5'-7" ≤ 6'	SPANS 6' ≤ 6'-6"	SPANS 6'-7" ≤ 7'	SPANS 7' ≤ 7'-6"	SPANS 7'-7" ≤ 8'	SPANS 8' ≤ 8'-6"	SPANS 8'-7" ≤ 9'	SPANS 9' ≤ 9'-6"	SPANS 9'-7" ≤ 10'	SPANS 10' ≤ 10'-6"	SPANS 10'-7" ≤ 11'	SPANS 11' ≤ 11'-6"	SPANS 11'-7" ≤ 12'	SPANS 12' ≤ 12'-6"	SPANS 12'-7" ≤ 13'	SPANS 13' ≤ 13'-6"	SPANS 13'-7" ≤ 14'	SPANS 14' ≤ 14'-6"	SPANS 14'-7" ≤ 15'	SPANS 15' ≤ 15'-6"	SPANS 15'-7" ≤ 16'
			2 1/2" MIN EDGE DISTANCE																									
GROUT-FILLED BLOCK	5/16" ELCO ULTRACON HFH 2-1/4" EMBEDMENT	30	18.0"	18.0"	18.0"	18.0"	18.0"	18.0"	17.0"	17.0"	16.0"	15.0"	14.0"	14.0"	13.0"	12.0"	12.0"	12.0"	11.0"	11.0"	10.0"	10.0"	10.0"	10.0"	9.0"	9.0"	9.0"	9.0"	8.0"
		35	18.0"	18.0"	18.0"	18.0"	18.0"	17.0"	16.0"	15.0"	14.0"	13.0"	13.0"	12.0"	12.0"	11.0"	11.0"	10.0"	10.0"	10.0"	9.0"	9.0"	9.0"	9.0"	8.0"	8.0"	8.0"	8.0"	7.0"
		40	18.0"	18.0"	18.0"	17.0"	16.0"	15.0"	14.0"	13.0"	13.0"	12.0"	11.0"	11.0"	10.0"	10.0"	10.0"	9.0"	9.0"	9.0"	8.0"	8.0"	8.0"	8.0"	7.0"	7.0"	7.0"	7.0"	7.0"
		45	18.0"	18.0"	17.0"	16.0"	15.0"	14.0"	13.0"	12.0"	12.0"	11.0"	10.0"	10.0"	10.0"	9.0"	9.0"	9.0"	8.0"	8.0"	8.0"	7.0"	7.0"	7.0"	7.0"	7.0"	6.0"	6.0"	6.0"
		50	18.0"	18.0"	16.0"	15.0"	14.0"	13.0"	12.0"	11.0"	11.0"	10.0"	10.0"	9.0"	9.0"	9.0"	8.0"	8.0"	8.0"	7.0"	7.0"	7.0"	7.0"	6.0"	6.0"	6.0"	6.0"	6.0"	6.0"
		55	18.0"	17.0"	15.0"	14.0"	13.0"	12.0"	11.0"	11.0"	10.0"	9.0"	9.0"	9.0"	8.0"	8.0"	8.0"	7.0"	7.0"	7.0"	7.0"	6.0"	6.0"	6.0"	6.0"	6.0"	6.0"		
		60	17.0"	16.0"	14.0"	13.0"	12.0"	11.0"	10.0"	10.0"	9.0"	9.0"	8.0"	8.0"	8.0"	7.0"	7.0"	7.0"	7.0"	6.0"	6.0"	6.0"	6.0"	6.0"					
		65	17.0"	13.0"	12.0"	11.0"	10.0"	9.0"	9.0"	8.0"	8.0"	7.0"	7.0"	7.0"	6.0"	6.0"	6.0"	6.0"	6.0"										
		70	16.0"	13.0"	11.0"	10.0"	10.0"	9.0"	8.0"	8.0"	7.0"	7.0"	7.0"	6.0"	6.0"	6.0"	6.0"												
		75	15.0"	12.0"	11.0"	10.0"	9.0"	8.0"	8.0"	7.0"	7.0"	7.0"	6.0"	6.0"	6.0"	6.0"													
		80	14.0"	11.0"	10.0"	9.0"	9.0"	8.0"	8.0"	7.0"	7.0"	6.0"	6.0"	6.0"															
		85	14.0"	11.0"	10.0"	9.0"	8.0"	8.0"	7.0"	7.0"	6.0"	6.0"	6.0"																
		90	13.0"	10.0"	9.0"	9.0"	8.0"	7.0"	7.0"	6.0"	6.0"	6.0"																	
		95	12.0"	10.0"	9.0"	8.0"	8.0"	7.0"	7.0"	6.0"	6.0"	6.0"																	
		100	12.0"	9.0"	8.0"	8.0"	7.0"	6.0"	6.0"	6.0"																			
		105	12.0"	9.0"	8.0"	7.0"	7.0"	6.0"	6.0"																				
		110	11.0"	8.0"	8.0"	7.0"	6.0"	6.0"	6.0"																				
		115	11.0"	8.0"	7.0"	7.0"	6.0"	6.0"																					
		120	10.0"	8.0"	7.0"	7.0"	6.0"	6.0"																					
		125	10.0"	8.0"	7.0"	6.0"	6.0"																						
		130	10.0"	7.0"	7.0"	6.0"	6.0"																						
			2 1/2" MIN EDGE DISTANCE																									
	1/4" ELCO ULTRACON HFH 2-1/4" EMBEDMENT	30	18.0"	18.0"	16.0"	15.0"	14.0"	13.0"	12.0"	11.0"	11.0"	10.0"	10.0"	9.0"	9.0"	9.0"	8.0"	8.0"	8.0"	8.0"	7.0"	7.0"	7.0"	7.0"	7.0"	6.0"	6.0"	6.0"	6.0"
		35	18.0"	16.0"	14.0"	13.0"	12.0"	12.0"	11.0"	10.0"	10.0"	9.0"	9.0"	8.0"	8.0"	8.0"	8.0"	7.0"	7.0"	7.0"	7.0"	6.0"	6.0"	6.0"	6.0"	6.0"	6.0"		
		40	16.0"	14.0"	13.0"	12.0"	11.0"	10.0"	10.0"	9.0"	9.0"	8.0"	8.0"	8.0"	7.0"	7.0"	7.0"	7.0"	6.0"	6.0"	6.0"	6.0"	6.0"						
		45	15.0"	13.0"	12.0"	11.0"	10.0"	10.0"	9.0"	9.0"	8.0"	8.0"	7.0"	7.0"	7.0"	6.0"	6.0"	6.0"	6.0"	6.0"	6.0"								
		50	14.0"	12.0"	11.0"	10.0"	10.0"	9.0"	8.0"	8.0"	8.0"	7.0"	7.0"	7.0"	6.0"	6.0"	6.0"	6.0"											
		55	13.0"	12.0"	10.0"	10.0"	9.0"	8.0"	8.0"	7.0"	7.0"	7.0"	6.0"	6.0"	6.0"	6.0"													
		60	12.0"	11.0"	10.0"	9.0"	8.0"	8.0"	7.0"	7.0"	7.0"	6.0"	6.0"	6.0"															
		65	10.0"	9.0"	8.0"	8.0"	7.0"	7.0"	6.0"	6.0"	6.0"																		
		70	10.0"	9.0"	8.0"	7.0"	7.0"	6.0"	6.0"	6.0"																			
		75	9.0"	8.0"	8.0"	7.0"	6.0"	6.0"	6.0"																				
		80	9.0"	8.0"	7.0"	7.0"	6.0"	6.0"																					
		85	8.0"	8.0"	7.0"	6.0"	6.0"																						
		90	8.0"	7.0"	7.0"	6.0"	6.0"																						
		95	8.0"	7.0"	6.0"	6.0"																							
		100	7.0"	6.0"	6.0"																								
		105	7.0"	6.0"	6.0"																								
		110	7.0"	6.0"																									
		115	6.0"	6.0"																									
		120	6.0"	6.0"																									
		125	6.0"																										
		130	6.0"																										

HOST STRUCT.	ANCHOR TYPE	LOAD (psf)	SPANS 16' ≤ 16'-6"	SPANS 16'-7" ≤ 17'	SPANS 17' ≤ 17'-6"	SPANS 17'-7" ≤ 18'	SPANS 18' ≤ 18'-6"	SPANS 18'-7" ≤ 19'	SPANS 19' ≤ 19'-6"	SPANS 19'-7" ≤ 20'	SPANS 20' ≤ 20'-6"	SPANS 20'-7" ≤ 21'	SPANS 21' ≤ 21'-6"	SPANS 21'-7" ≤ 22'	SPANS 22' ≤ 22'-6"	SPANS 22'-7" ≤ 23'	SPANS 23' ≤ 23'-6"	SPANS 23'-7" ≤ 24'	SPANS 24' ≤ 24'-6"	SPANS 24'-7" ≤ 25'	SPANS 25' ≤ 25'-6"	SPANS 25'-7" ≤ 26'
			3 1/8" MIN EDGE DISTANCE																			
GROUT-FILLED BLOCK	5/16" ELCO ULTRACON HFH 2-1/4" EMBEDMENT	30	8.0"	8.0"	8.0"	8.0"	8.0"	7.0"	7.0"	7.0"	7.0"	7.0"	7.0"	7.0"	6.0"	6.0"	6.0"	6.0"	6.0"	6.0"	6.0"	6.0"
		35	7.0"	7.0"	7.0"	7.0"	7.0"	7.0"	6.0"	6.0"	6.0"	6.0"	6.0"	6.0"	6.0"	6.0"	6.0"					
		40	7.0"	6.0"	6.0"	6.0"	6.0"	6.0"	6.0"	6.0"	6.0"											
		45	6.0"	6.0"	6.0"	6.0"																
		50	6.0"																			
		55																				
		60																				

NOTES:
1. THE SPACING ON THIS CHART APPLIES ONLY TO THE INSTALLATION OF STRAP BRACKETS.

FRANK L. BENNARDO, P.E.
PE# 0046549
LICENSE
NO PE0046549
10/20/2017
NOT VALID WITHOUT THE RAISED SEAL OF A FLORIDA LICENSED PROFESSIONAL ENGINEER
FRANK L. BENNARDO, P.E.
46549
STATE OF FLORIDA

ENGINEERING EXPRESS®
CORPORATE OFFICE:
160 SW 12th AVE, SUITE 106
DEERFIELD BEACH, FL 33442
P: (954) 354-0660 F: (954) 354-0443
E: HELLO@ENGINEERINGEXPRESS.COM
ENGINEERINGEXPRESS.COM
CERT OF AUTH #9885

STORM SMART INDUSTRIES, INC.
6182 IDLEWILD STREET
FORT MYERS , FL
(239) 938-1000

STORM CATCHER WIND ABATEMENT SYSTEM FL11291.2 HVHZ
-
-, FL

REMARKS	DRWN	CHKD	DATE
INIT ISSUE	RWN	FLB	10/19/17

THIS DOCUMENT IS THE PROPERTY OF ENGINEERING EXPRESS, AND SHALL NOT BE REPRODUCED IN WHOLE OR PART WITHOUT WRITTEN CONSENT OF ENGINEERING EXPRESS. ALTERATIONS, ADDITIONS, OR OTHER MARKINGS TO THIS DOCUMENT ARE NOT PERMITTED AND INVALIDATE OUR CERTIFICATION.
COPYRIGHT ENGINEERING EXPRESS®

16-3080

SCALE: NTS UNLESS NOTED

10/20/2017 - 3:08pm zachr V:\Projects\16-3080 Storm Catcher Wind Abatement System FL11291-R4\WP\2017 FBC Update\16-3080e-Dwg-11291.2.dwg

$\frac{5}{16}$" & $\frac{1}{4}$" ELCO ULTRACON HFH
$\frac{1}{4}$" PANELMATE INSERT

TABLE 16 - HOLLOW BLOCK

HOST STRUCT.	ANCHOR TYPE	LOAD (psf)	SPANS 0" ≤ 3'	SPANS 3' ≤ 3'-6"	SPANS 3'-7" ≤ 4'	SPANS 4' ≤ 4'-6"	SPANS 4'-7" ≤ 5'	SPANS 5' ≤ 5'-6"	SPANS 5'-7" ≤ 6'	SPANS 6' ≤ 6'-6"	SPANS 6'-7" ≤ 7'	SPANS 7' ≤ 7'-6"	SPANS 7'-7" ≤ 8'	SPANS 8' ≤ 8'-6"	SPANS 8'-7" ≤ 9'	SPANS 9' ≤ 9'-6"	SPANS 9'-7" ≤ 10'	SPANS 10' ≤ 10'-6"	SPANS 10'-7" ≤ 11'	SPANS 11' ≤ 11'-6"	SPANS 11'-7" ≤ 12'	SPANS 12' ≤ 12'-6"	SPANS 12'-7" ≤ 13'	SPANS 13' ≤ 13'-6"	SPANS 13'-7" ≤ 14'	SPANS 14' ≤ 14'-6"	SPANS 14'-7" ≤ 15'	SPANS 15' ≤ 15'-6"	SPANS 15'-7" ≤ 16'
			3-1/8" MIN EDGE DISTANCE																										
HOLLOW BLOCK	5/16" ELCO ULTRACON HFH 1-1/4" EMBEDMENT	30	12.0"	11.0"	10.0"	9.0"	9.0"	8.0"	7.0"	7.0"	7.0"	6.0"	6.0"	6.0"															
		35	11.0"	10.0"	9.0"	8.0"	8.0"	7.0"	7.0"	6.0"	6.0"	6.0"																	
		40	10.0"	9.0"	8.0"	7.0"	7.0"	6.0"	6.0"	6.0"																			
		45	9.0"	8.0"	7.0"	7.0"	6.0"	6.0"																					
		50	9.0"	8.0"	7.0"	6.0"	6.0"																						
		55	8.0"	7.0"	6.0"	6.0"																							
		60	7.0"	7.0"	6.0"																								
		65	7.0"	6.0"	6.0"																								
		70	7.0"	6.0"																									
		75	6.0"	6.0"																									
		80	6.0"																										
		85	6.0"																										
		90																											
		95																											
		100																											
		105																											
		110																											
		115																											
		120																											
		125																											
		130																											
			2 1/2" MIN EDGE DISTANCE																										
	1/4" ELCO ULTRACON HFH 1-1/4" EMBEDMENT	30	12.0"	11.0"	10.0"	9.0"	8.0"	7.0"	7.0"	7.0"	6.0"	6.0"	6.0"																
		35	11.0"	9.0"	9.0"	8.0"	7.0"	7.0"	6.0"	6.0"																			
		40	10.0"	9.0"	8.0"	7.0"	6.0"	6.0"	6.0"																				
		45	9.0"	8.0"	7.0"	6.0"	6.0"																						
		50	8.0"	7.0"	6.0"	6.0"																							
		55	7.0"	7.0"	6.0"																								
		60	7.0"	6.0"	6.0"																								
		65	7.0"	6.0"																									
		70	6.0"																										
		75	6.0"																										
		80	6.0"																										
		85																											
		90																											
		95																											
		100																											
		105																											
		110																											
		115																											
		120																											
		125																											
		130																											
			3 1/2" MIN EDGE DISTANCE																										
	1/4" PANELMATE INSERT 1-1/4" EMBEDMENT (1794 PSI CONC)	30	12.0"	12.0"	12.0"	12.0"	12.0"	12.0"	12.0"	12.0"	12.0"	12.0"	11.0"	11.0"	10.0"	10.0"	10.0"	9.0"	9.0"	9.0"	8.0"	8.0"	8.0"	8.0"	7.0"	7.0"	7.0"	7.0"	7.0"
		35	12.0"	12.0"	12.0"	12.0"	12.0"	12.0"	12.0"	12.0"	11.0"	11.0"	10.0"	10.0"	9.0"	9.0"	8.0"	8.0"	8.0"	8.0"	7.0"	7.0"	7.0"	7.0"	6.0"	6.0"	6.0"	6.0"	6.0"
		40	12.0"	12.0"	12.0"	12.0"	12.0"	12.0"	11.0"	11.0"	10.0"	10.0"	9.0"	9.0"	8.0"	8.0"	8.0"	7.0"	7.0"	7.0"	7.0"	6.0"	6.0"	6.0"	6.0"	6.0"			
		45	12.0"	12.0"	12.0"	12.0"	12.0"	11.0"	10.0"	10.0"	9.0"	9.0"	8.0"	8.0"	8.0"	7.0"	7.0"	7.0"	6.0"	6.0"	6.0"	6.0"	6.0"						
		50	12.0"	12.0"	12.0"	12.0"	11.0"	10.0"	10.0"	9.0"	8.0"	8.0"	8.0"	7.0"	7.0"	7.0"	6.0"	6.0"	6.0"	6.0"									
		55	12.0"	12.0"	12.0"	11.0"	10.0"	9.0"	9.0"	8.0"	8.0"	7.0"	7.0"	7.0"	6.0"	6.0"	6.0"	6.0"											
		60	12.0"	12.0"	11.0"	10.0"	10.0"	9.0"	8.0"	8.0"	7.0"	7.0"	7.0"	6.0"	6.0"	6.0"													
		65	12.0"	12.0"	11.0"	10.0"	9.0"	8.0"	8.0"	7.0"	7.0"	6.0"	6.0"	6.0"	6.0"														
		70	12.0"	11.0"	10.0"	9.0"	8.0"	8.0"	7.0"	7.0"	6.0"	6.0"	6.0"	6.0"															
		75	12.0"	11.0"	10.0"	9.0"	8.0"	7.0"	7.0"	6.0"	6.0"	6.0"																	
		80	11.0"	10.0"	9.0"	8.0"	8.0"	7.0"	7.0"	6.0"	6.0"																		
		85	11.0"	10.0"	9.0"	8.0"	7.0"	7.0"	6.0"	6.0"	6.0"																		
		90	10.0"	9.0"	8.0"	8.0"	7.0"	6.0"	6.0"	6.0"																			
		95	10.0"	9.0"	8.0"	7.0"	7.0"	6.0"	6.0"																				
		100	10.0"	8.0"	8.0"	7.0"	6.0"	6.0"																					
		105	9.0"	8.0"	7.0"	7.0"	6.0"	6.0"																					
		110	9.0"	8.0"	7.0"	6.0"	6.0"																						
		115	9.0"	8.0"	7.0"	6.0"	6.0"																						
		120	8.0"	7.0"	7.0"	6.0"																							
		125	8.0"	7.0"	6.0"	6.0"																							
		130	8.0"	7.0"	6.0"	6.0"																							

NOTES:

1. APPROVED FOR USE ATTACHING GROMMET SCREENS & ALL TRACKS OR STUDDED ANGLE WITH ¼" SIDEWALK BOLT

FRANK L. BENNARDO, P.E.
PE# 0046549
10/20/2017
IF CHECKED, CERTIFICATE #'S, INITIALS BELOW
FRANK L. BENNARDO, P.E.
46549

FRANK L. BENNARDO LICENSE No PE0046549 STATE OF FLORIDA PROFESSIONAL ENGINEER

ENGINEERING EXPRESS®
CORPORATE OFFICE:
160 SW 12th AVE, SUITE 106
DEERFIELD BEACH, FL 33442
P: (954) 354-0660 F: (954) 354-0443
E: HELLO@ENGINEERINGEXPRESS.COM
ENGINEERINGEXPRESS.COM
CERT OF AUTH: #9885

STORM SMART INDUSTRIES, INC.
6182 IDLEWILD STREET
FORT MYERS , FL
(239) 938-1000

STORM CATCHER WIND ABATEMENT SYSTEM FL11291.2 HVHZ
-
-, FL

REMARKS	DRWN	CHKD	DATE
INIT ISSUE	RWN	FLB	10/18/17

THIS DOCUMENT IS THE PROPERTY OF ENGINEERING EXPRESS, AND SHALL NOT BE REPRODUCED IN WHOLE OR PART WITHOUT WRITTEN CONSENT OF ENGINEERING EXPRESS. ALTERATIONS, ADDITIONS, OR OTHER MARKINGS TO THIS DOCUMENT ARE NOT PERMITTED AND INVALIDATE OUR CERTIFICATION.

COPYRIGHT ENGINEERING EXPRESS ©

16-3080

SCALE: NTS UNLESS NOTED

10/20/2017 - 3:09pm zachr V:\Projects\16-3080 Storm Catcher Wind Abatement System FL11291-R4\WP\2017 FBC Update\16-3080e-Dwg-11291.2.dwg

TABLE 17 - HOLLOW BLOCK

$\frac{1}{2}$"& $\frac{3}{8}$" POWERS HOLLOW-SET & $\frac{3}{8}$" EXPOXY

HOST STRUCT.	ANCHOR TYPE	LOAD (psf)	SPANS 0" ≤ 3'	SPANS 3' ≤ 3'-6"	SPANS 0" ≤ 3'	SPANS 3' ≤ 3'-6"	SPANS 4'-7" ≤ 5'	SPANS 5' ≤ 5'-6"	SPANS 5'-7" ≤ 6'	SPANS 6' ≤ 6'-6"	SPANS 6'-7" ≤ 7'	SPANS 7' ≤ 7'-6"	SPANS 7'-7" ≤ 8'	SPANS 8' ≤ 8'-6"	SPANS 8'-7" ≤ 9'	SPANS 9' ≤ 9'-6"	SPANS 9'-7" ≤ 10'	SPANS 10' ≤ 10'-6"	SPANS 10'-7" ≤ 11'	SPANS 11' ≤ 11'-6"	SPANS 11'-7" ≤ 12'	SPANS 12' ≤ 12'-6"	SPANS 12'-7" ≤ 13'	SPANS 13' ≤ 13'-6"	SPANS 13'-7" ≤ 14'	SPANS 14' ≤ 14'-6"	SPANS 14'-7" ≤ 15'	SPANS 15' ≤ 15'-6"	SPANS 15'-7" ≤ 16'
			3-3/4" MIN EDGE DISTANCE																									
HOLLOW BLOCK	1/2" POWERS HOLLOW-SET 1-1/4" EMBEDMENT (1500 PSI BLOCK)	30	11.0"	10.0"	9.0"	8.0"	8.0"	7.0"	7.0"	6.0"	6.0"	6.0"	5.0"	5.0"	5.0"	5.0"	5.0"	N/A	N/A	N/A	N/A	N/A	N/A	N/A	N/A	N/A	N/A	N/A	N/A
		35	10.0"	9.0"	8.0"	7.0"	7.0"	6.0"	6.0"	6.0"	5.0"	5.0"	5.0"	5.0"	N/A	N/A	N/A	N/A	N/A	N/A	N/A	N/A	N/A	N/A	N/A	N/A	N/A	N/A
		40	9.0"	8.0"	7.0"	7.0"	6.0"	6.0"	5.0"	5.0"	5.0"	5.0"	N/A	N/A	N/A	N/A	N/A	N/A	N/A	N/A	N/A	N/A	N/A	N/A	N/A	N/A	N/A	N/A
		45	8.0"	7.0"	7.0"	6.0"	6.0"	5.0"	5.0"	5.0"	N/A	N/A	N/A	N/A	N/A	N/A	N/A	N/A	N/A	N/A	N/A	N/A	N/A	N/A	N/A	N/A	N/A	N/A
		50	8.0"	7.0"	6.0"	6.0"	5.0"	5.0"	5.0"	N/A	N/A	N/A	N/A	N/A	N/A	N/A	N/A	N/A	N/A	N/A	N/A	N/A	N/A	N/A	N/A	N/A	N/A	N/A
		55	7.0"	6.0"	6.0"	5.0"	5.0"	N/A	N/A	N/A	N/A	N/A	N/A	N/A	N/A	N/A	N/A	N/A	N/A	N/A	N/A	N/A	N/A	N/A	N/A	N/A	N/A	N/A
		60	7.0"	6.0"	5.0"	5.0"	5.0"	N/A	N/A	N/A	N/A	N/A	N/A	N/A	N/A	N/A	N/A	N/A	N/A	N/A	N/A	N/A	N/A	N/A	N/A	N/A	N/A	N/A
		65	6.0"	6.0"	5.0"	5.0"	N/A	N/A	N/A	N/A	N/A	N/A	N/A	N/A	N/A	N/A	N/A	N/A	N/A	N/A	N/A	N/A	N/A	N/A	N/A	N/A	N/A	N/A
		70	6.0"	5.0"	5.0"	N/A	N/A	N/A	N/A	N/A	N/A	N/A	N/A	N/A	N/A	N/A	N/A	N/A	N/A	N/A	N/A	N/A	N/A	N/A	N/A	N/A	N/A	N/A
		75	6.0"	5.0"	5.0"	N/A	N/A	N/A	N/A	N/A	N/A	N/A	N/A	N/A	N/A	N/A	N/A	N/A	N/A	N/A	N/A	N/A	N/A	N/A	N/A	N/A	N/A	N/A
		80	5.0"	5.0"	N/A	N/A	N/A	N/A	N/A	N/A	N/A	N/A	N/A	N/A	N/A	N/A	N/A	N/A	N/A	N/A	N/A	N/A	N/A	N/A	N/A	N/A	N/A	N/A
		85	5.0"	5.0"	N/A	N/A	N/A	N/A	N/A	N/A	N/A	N/A	N/A	N/A	N/A	N/A	N/A	N/A	N/A	N/A	N/A	N/A	N/A	N/A	N/A	N/A	N/A	N/A
		90	5.0"	N/A	N/A	N/A	N/A	N/A	N/A	N/A	N/A	N/A	N/A	N/A	N/A	N/A	N/A	N/A	N/A	N/A	N/A	N/A	N/A	N/A	N/A	N/A	N/A	N/A
		95	5.0"	N/A	N/A	N/A	N/A	N/A	N/A	N/A	N/A	N/A	N/A	N/A	N/A	N/A	N/A	N/A	N/A	N/A	N/A	N/A	N/A	N/A	N/A	N/A	N/A	N/A
		100	5.0"	N/A	N/A	N/A	N/A	N/A	N/A	N/A	N/A	N/A	N/A	N/A	N/A	N/A	N/A	N/A	N/A	N/A	N/A	N/A	N/A	N/A	N/A	N/A	N/A	N/A
			3-3/4" MIN EDGE DISTANCE																									
	3/8" POWERS HOLLOW-SET 1-1/4" EMBEDMENT (1500 PSI BLOCK)	30	10.0"	9.0"	8.0"	8.0"	7.0"	7.0"	6.0"	6.0"	5.0"	5.0"	5.0"	5.0"	N/A	N/A	N/A	N/A	N/A	N/A	N/A	N/A	N/A	N/A	N/A	N/A	N/A	N/A
		35	9.0"	8.0"	7.0"	7.0"	6.0"	6.0"	5.0"	5.0"	5.0"	5.0"	N/A	N/A	N/A	N/A	N/A	N/A	N/A	N/A	N/A	N/A	N/A	N/A	N/A	N/A	N/A	N/A
		40	8.0"	7.0"	7.0"	6.0"	6.0"	5.0"	5.0"	5.0"	N/A	N/A	N/A	N/A	N/A	N/A	N/A	N/A	N/A	N/A	N/A	N/A	N/A	N/A	N/A	N/A	N/A	N/A
		45	8.0"	7.0"	6.0"	6.0"	5.0"	5.0"	N/A	N/A	N/A	N/A	N/A	N/A	N/A	N/A	N/A	N/A	N/A	N/A	N/A	N/A	N/A	N/A	N/A	N/A	N/A	N/A
		50	7.0"	6.0"	6.0"	5.0"	5.0"	N/A	N/A	N/A	N/A	N/A	N/A	N/A	N/A	N/A	N/A	N/A	N/A	N/A	N/A	N/A	N/A	N/A	N/A	N/A	N/A	N/A
		55	7.0"	6.0"	5.0"	5.0"	N/A	N/A	N/A	N/A	N/A	N/A	N/A	N/A	N/A	N/A	N/A	N/A	N/A	N/A	N/A	N/A	N/A	N/A	N/A	N/A	N/A	N/A
		60	6.0"	5.0"	5.0"	N/A	N/A	N/A	N/A	N/A	N/A	N/A	N/A	N/A	N/A	N/A	N/A	N/A	N/A	N/A	N/A	N/A	N/A	N/A	N/A	N/A	N/A	N/A
		65	6.0"	5.0"	5.0"	N/A	N/A	N/A	N/A	N/A	N/A	N/A	N/A	N/A	N/A	N/A	N/A	N/A	N/A	N/A	N/A	N/A	N/A	N/A	N/A	N/A	N/A	N/A
		70	5.0"	5.0"	N/A	N/A	N/A	N/A	N/A	N/A	N/A	N/A	N/A	N/A	N/A	N/A	N/A	N/A	N/A	N/A	N/A	N/A	N/A	N/A	N/A	N/A	N/A	N/A
		75	5.0"	5.0"	N/A	N/A	N/A	N/A	N/A	N/A	N/A	N/A	N/A	N/A	N/A	N/A	N/A	N/A	N/A	N/A	N/A	N/A	N/A	N/A	N/A	N/A	N/A	N/A
		80	5.0"	N/A	N/A	N/A	N/A	N/A	N/A	N/A	N/A	N/A	N/A	N/A	N/A	N/A	N/A	N/A	N/A	N/A	N/A	N/A	N/A	N/A	N/A	N/A	N/A	N/A
		85	5.0"	N/A	N/A	N/A	N/A	N/A	N/A	N/A	N/A	N/A	N/A	N/A	N/A	N/A	N/A	N/A	N/A	N/A	N/A	N/A	N/A	N/A	N/A	N/A	N/A	N/A
		90	N/A	N/A	N/A	N/A	N/A	N/A	N/A	N/A	N/A	N/A	N/A	N/A	N/A	N/A	N/A	N/A	N/A	N/A	N/A	N/A	N/A	N/A	N/A	N/A	N/A	N/A
		95	N/A	N/A	N/A	N/A	N/A	N/A	N/A	N/A	N/A	N/A	N/A	N/A	N/A	N/A	N/A	N/A	N/A	N/A	N/A	N/A	N/A	N/A	N/A	N/A	N/A	N/A
		100	N/A	N/A	N/A	N/A	N/A	N/A	N/A	N/A	N/A	N/A	N/A	N/A	N/A	N/A	N/A	N/A	N/A	N/A	N/A	N/A	N/A	N/A	N/A	N/A	N/A	N/A
			12" MIN EDGE DISTANCE																									
HOLLOW BLOCK	ITW RED HEAD UMBRELLA INSERT FOR 3/8" ROD WITH 3-3/4" EMBEDMENT USING A7 EPOXY IN BLOCK	30	12.0"	12.0"	12.0"	12.0"	12.0"	12.0"	12.0"	12.0"	12.0"	12.0"	12.0"	12.0"	12.0"	12.0"	11.0"	11.0"	11.0"	10.0"	10.0"	10.0"	10.0"	9.0"	9.0"	9.0"	9.0"	8.0"
		35	12.0"	12.0"	12.0"	12.0"	12.0"	12.0"	12.0"	12.0"	12.0"	12.0"	12.0"	12.0"	11.0"	11.0"	11.0"	10.0"	10.0"	10.0"	9.0"	9.0"	9.0"	9.0"	8.0"	8.0"	8.0"	8.0"	8.0"
		40	12.0"	12.0"	12.0"	12.0"	12.0"	12.0"	12.0"	12.0"	12.0"	12.0"	11.0"	11.0"	10.0"	10.0"	10.0"	9.0"	9.0"	9.0"	8.0"	8.0"	8.0"	8.0"	8.0"	N/A	N/A	N/A	N/A
		45	12.0"	12.0"	12.0"	12.0"	12.0"	12.0"	12.0"	12.0"	11.0"	11.0"	10.0"	10.0"	10.0"	9.0"	9.0"	9.0"	8.0"	8.0"	8.0"	N/A	N/A	N/A	N/A	N/A	N/A	N/A	N/A
		50	12.0"	12.0"	12.0"	12.0"	12.0"	12.0"	12.0"	11.0"	11.0"	10.0"	10.0"	9.0"	9.0"	8.0"	8.0"	8.0"	8.0"	N/A	N/A	N/A	N/A	N/A	N/A	N/A	N/A	N/A	N/A
		55	12.0"	12.0"	12.0"	12.0"	12.0"	12.0"	11.0"	10.0"	10.0"	9.0"	9.0"	9.0"	8.0"	8.0"	8.0"	N/A	N/A	N/A	N/A	N/A	N/A	N/A	N/A	N/A	N/A	N/A	N/A
		60	12.0"	12.0"	12.0"	12.0"	12.0"	11.0"	10.0"	10.0"	9.0"	9.0"	8.0"	8.0"	8.0"	N/A	N/A	N/A	N/A	N/A	N/A	N/A	N/A	N/A	N/A	N/A	N/A	N/A	N/A
		65	12.0"	12.0"	12.0"	12.0"	11.0"	10.0"	10.0"	9.0"	9.0"	8.0"	8.0"	8.0"	N/A	N/A	N/A	N/A	N/A	N/A	N/A	N/A	N/A	N/A	N/A	N/A	N/A	N/A	N/A
		70	12.0"	12.0"	12.0"	11.0"	11.0"	10.0"	9.0"	9.0"	8.0"	8.0"	8.0"	N/A	N/A	N/A	N/A	N/A	N/A	N/A	N/A	N/A	N/A	N/A	N/A	N/A	N/A	N/A	N/A
		75	12.0"	12.0"	12.0"	11.0"	10.0"	9.0"	9.0"	8.0"	8.0"	N/A	N/A	N/A	N/A	N/A	N/A	N/A	N/A	N/A	N/A	N/A	N/A	N/A	N/A	N/A	N/A	N/A	N/A
		80	12.0"	12.0"	11.0"	10.0"	10.0"	9.0"	8.0"	8.0"	8.0"	N/A	N/A	N/A	N/A	N/A	N/A	N/A	N/A	N/A	N/A	N/A	N/A	N/A	N/A	N/A	N/A	N/A	N/A
		85	12.0"	12.0"	11.0"	10.0"	9.0"	9.0"	8.0"	8.0"	N/A	N/A	N/A	N/A	N/A	N/A	N/A	N/A	N/A	N/A	N/A	N/A	N/A	N/A	N/A	N/A	N/A	N/A	N/A
		90	12.0"	11.0"	10.0"	10.0"	9.0"	8.0"	8.0"	N/A	N/A	N/A	N/A	N/A	N/A	N/A	N/A	N/A	N/A	N/A	N/A	N/A	N/A	N/A	N/A	N/A	N/A	N/A	N/A
		95	12.0"	11.0"	10.0"	9.0"	8.0"	8.0"	N/A	N/A	N/A	N/A	N/A	N/A	N/A	N/A	N/A	N/A	N/A	N/A	N/A	N/A	N/A	N/A	N/A	N/A	N/A	N/A	N/A
		100	12.0"	11.0"	10.0"	9.0"	8.0"	8.0"	N/A	N/A	N/A	N/A	N/A	N/A	N/A	N/A	N/A	N/A	N/A	N/A	N/A	N/A	N/A	N/A	N/A	N/A	N/A	N/A	N/A
		105	11.0"	10.0"	9.0"	9.0"	8.0"	N/A	N/A	N/A	N/A	N/A	N/A	N/A	N/A	N/A	N/A	N/A	N/A	N/A	N/A	N/A	N/A	N/A	N/A	N/A	N/A	N/A	N/A
		110	11.0"	10.0"	9.0"	8.0"	8.0"	N/A	N/A	N/A	N/A	N/A	N/A	N/A	N/A	N/A	N/A	N/A	N/A	N/A	N/A	N/A	N/A	N/A	N/A	N/A	N/A	N/A	N/A
		115	11.0"	10.0"	9.0"	8.0"	N/A	N/A	N/A	N/A	N/A	N/A	N/A	N/A	N/A	N/A	N/A	N/A	N/A	N/A	N/A	N/A	N/A	N/A	N/A	N/A	N/A	N/A	N/A
		120	10.0"	9.0"	8.0"	8.0"	N/A	N/A	N/A	N/A	N/A	N/A	N/A	N/A	N/A	N/A	N/A	N/A	N/A	N/A	N/A	N/A	N/A	N/A	N/A	N/A	N/A	N/A	N/A
		125	10.0"	9.0"	8.0"	N/A	N/A	N/A	N/A	N/A	N/A	N/A	N/A	N/A	N/A	N/A	N/A	N/A	N/A	N/A	N/A	N/A	N/A	N/A	N/A	N/A	N/A	N/A	N/A
		130	10.0"	9.0"	8.0"	N/A	N/A	N/A	N/A	N/A	N/A	N/A	N/A	N/A	N/A	N/A	N/A	N/A	N/A	N/A	N/A	N/A	N/A	N/A	N/A	N/A	N/A	N/A	N/A
			12" MIN EDGE DISTANCE																									
HOLLOW BLOCK	ITW RED HEAD UMBRELLA INSERT FOR 3/8" ROD WITH 3-3/4" EMBEDMENT USING C6 EPOXY IN BLOCK	30	12.0"	12.0"	12.0"	12.0"	12.0"	12.0"	12.0"	11.0"	10.0"	10.0"	9.0"	9.0"	9.0"	8.0"	8.0"	8.0"	N/A	N/A	N/A	N/A	N/A	N/A	N/A	N/A	N/A	N/A	N/A
		35	12.0"	12.0"	12.0"	12.0"	12.0"	11.0"	10.0"	10.0"	9.0"	9.0"	8.0"	8.0"	8.0"	N/A	N/A	N/A	N/A	N/A	N/A	N/A	N/A	N/A	N/A	N/A	N/A	N/A	N/A
		40	12.0"	12.0"	12.0"	12.0"	11.0"	10.0"	9.0"	9.0"	8.0"	8.0"	8.0"	N/A	N/A	N/A	N/A	N/A	N/A	N/A	N/A	N/A	N/A	N/A	N/A	N/A	N/A	N/A	N/A
		45	12.0"	12.0"	12.0"	11.0"	10.0"	9.0"	9.0"	8.0"	8.0"	N/A	N/A	N/A	N/A	N/A	N/A	N/A	N/A	N/A	N/A	N/A	N/A	N/A	N/A	N/A	N/A	N/A	N/A
		50	12.0"	12.0"	11.0"	10.0"	9.0"	9.0"	8.0"	8.0"	N/A	N/A	N/A	N/A	N/A	N/A	N/A	N/A	N/A	N/A	N/A	N/A	N/A	N/A	N/A	N/A	N/A	N/A	N/A
		55	12.0"	11.0"	10.0"	9.0"	9.0"	8.0"	N/A	N/A	N/A	N/A	N/A	N/A	N/A	N/A	N/A	N/A	N/A	N/A	N/A	N/A	N/A	N/A	N/A	N/A	N/A	N/A	N/A
		60	12.0"	10.0"	9.0"	9.0"	8.0"	N/A	N/A	N/A	N/A	N/A	N/A	N/A	N/A	N/A	N/A	N/A	N/A	N/A	N/A	N/A	N/A	N/A	N/A	N/A	N/A	N/A	N/A
		65	11.0"	10.0"	9.0"	8.0"	8.0"	N/A	N/A	N/A	N/A	N/A	N/A	N/A	N/A	N/A	N/A	N/A	N/A	N/A	N/A	N/A	N/A	N/A	N/A	N/A	N/A	N/A	N/A
		70	10.0"	9.0"	8.0"	8.0"	N/A	N/A	N/A	N/A	N/A	N/A	N/A	N/A	N/A	N/A	N/A	N/A	N/A	N/A	N/A	N/A	N/A	N/A	N/A	N/A	N/A	N/A	N/A
		75	10.0"	9.0"	8.0"	N/A	N/A	N/A	N/A	N/A	N/A	N/A	N/A	N/A	N/A	N/A	N/A	N/A	N/A	N/A	N/A	N/A	N/A	N/A	N/A	N/A	N/A	N/A	N/A
		80	9.0"	8.0"	8.0"	N/A	N/A	N/A	N/A	N/A	N/A	N/A	N/A	N/A	N/A	N/A	N/A	N/A	N/A	N/A	N/A	N/A	N/A	N/A	N/A	N/A	N/A	N/A	N/A
		85	9.0"	8.0"	N/A	N/A	N/A	N/A	N/A	N/A	N/A	N/A	N/A	N/A	N/A	N/A	N/A	N/A	N/A	N/A	N/A	N/A	N/A	N/A	N/A	N/A	N/A	N/A	N/A
		90	9.0"	8.0"	N/A	N/A	N/A	N/A	N/A	N/A	N/A	N/A	N/A	N/A	N/A	N/A	N/A	N/A	N/A	N/A	N/A	N/A	N/A	N/A	N/A	N/A	N/A	N/A	N/A
		95	8.0"	N/A	N/A	N/A	N/A	N/A	N/A	N/A	N/A	N/A	N/A	N/A	N/A	N/A	N/A	N/A	N/A	N/A	N/A	N/A	N/A	N/A	N/A	N/A	N/A	N/A	N/A
		100	8.0"	N/A	N/A	N/A	N/A	N/A	N/A	N/A	N/A	N/A	N/A	N/A	N/A	N/A	N/A	N/A	N/A	N/A	N/A	N/A	N/A	N/A	N/A	N/A	N/A	N/A	N/A
		105	8.0"	N/A	N/A	N/A	N/A	N/A	N/A	N/A	N/A	N/A	N/A	N/A	N/A	N/A	N/A	N/A	N/A	N/A	N/A	N/A	N/A	N/A	N/A	N/A	N/A	N/A	N/A

NOTES:

1. APPROVED FOR USE ATTACHING GROMMET SCREENS & ALL TRACKS OR STUDDED ANGLE WITH ½" OR ⅜" SIDEWALK BOLT

FRANK L. BENNARDO, P.E.
PE# PE46549
10/20/2017
IF CHECKED, CERTIFICATE NUMBERS BELOW
FRANK L. BENNARDO, P.E.
46549
STATE OF FLORIDA
PROFESSIONAL ENGINEER
LICENSE No PE46549

ENGINEERING EXPRESS INC
CORPORATE OFFICE:
160 SW 12th AVE, SUITE 100
DEERFIELD BEACH, FL 33442
P: (954) 354-0660 F: (954) 354-0443
E: HELLO@ENGINEERINGEXPRESS.COM
ENGINEERINGEXPRESS.COM
CERT OF AUTH: #9885

STORM SMART INDUSTRIES, INC.
6182 IDLEWILD STREET
FORT MYERS , FL
(239) 938-1000

STORM CATCHER WIND ABATEMENT SYSTEM FL11291.2 HVHZ
-
-, FL

REMARKS	DRWN	CHKD	DATE
INT ISSUE	RWN	FLB	10/18/17
-	-	-	-
-	-	-	-
-	-	-	-
-	-	-	-

THIS DOCUMENT IS THE PROPERTY OF ENGINEERING EXPRESS, AND SHALL NOT BE REPRODUCED IN WHOLE OR PART WITHOUT WRITTEN CONSENT OF ENGINEERING EXPRESS. ALTERATIONS, ADDITIONS, OR OTHER MARKINGS TO THIS DOCUMENT ARE NOT PERMITTED AND INVALIDATE OUR CERTIFICATION.

COPYRIGHT ENGINEERING EXPRESS ®

16-3080

SCALE: NTS UNLESS NOTED

10/20/2017 - 3:08pm zachr V:\Projects\16-3080 Storm Catcher Wind Abatement System FL11291-R4\WP\2017 FBC Update\16-3080e-Dwg-112912.dwg

#14-10 PANELMATE

TABLE 18 - HOLLOW BLOCK

HOST STRUCT.	ANCHOR TYPE	LOAD (psf)	SPANS 0" ≤ 3'	SPANS 3' ≤ 3'-6"	SPANS 3'-7" ≤ 4'	SPANS 4' ≤ 3'-6"	SPANS 4'-7" ≤ 5'	SPANS 5' ≤ 5'-6"	SPANS 5'-7" ≤ 6'	SPANS 6' ≤ 6'-6"	SPANS 6'-7" ≤ 7'	SPANS 7' ≤ 7'-6"	SPANS 7'-7" ≤ 8'	SPANS 8' ≤ 8'-6"	SPANS 8'-7" ≤ 9'	SPANS 9' ≤ 9'-6"	SPANS 9'-7" ≤ 10'	SPANS 10' ≤ 10'-6"	SPANS 10'-7" ≤ 11'	SPANS 11' ≤ 11'-6"	SPANS 11'-7" ≤ 12'	SPANS 12' ≤ 12'-6"	SPANS 12'-7" ≤ 13'	SPANS 13' ≤ 13'-6"	SPANS 13'-7" ≤ 14'	SPANS 14' ≤ 14'-6"	SPANS 14'-7" ≤ 15'	SPANS 15' ≤ 15'-6"	SPANS 15'-7" ≤ 16'
			3" MIN EDGE DISTANCE																										
HOLLOW BLOCK	14-10 PANELMATE PRO, PLUS, TVAS 1-1/4" EMBEDMENT (CMU 2000 PSI)	30	11.0"	10.0"	9.0"	8.0"	8.0"	7.0"	7.0"	6.0"	6.0"	6.0"	5.0"	5.0"	5.0"	5.0"	4.0"	4.0"	4.0"	4.0"	4.0"	4.0"	4.0"	4.0"	3.0"	3.0"	3.0"	3.0"	3.0"
		35	10.0"	9.0"	8.0"	7.0"	7.0"	6.0"	6.0"	6.0"	5.0"	5.0"	5.0"	5.0"	4.0"	4.0"	4.0"	4.0"	4.0"	3.0"	3.0"	3.0"	3.0"	3.0"	3.0"	3.0"	3.0"	3.0"	3.0"
		40	9.0"	8.0"	7.0"	7.0"	6.0"	6.0"	5.0"	5.0"	5.0"	4.0"	4.0"	4.0"	4.0"	4.0"	4.0"	3.0"	3.0"	3.0"	3.0"	3.0"	3.0"	3.0"	3.0"	3.0"	3.0"	2.0"	2.0"
		45	8.0"	7.0"	7.0"	6.0"	6.0"	5.0"	5.0"	5.0"	4.0"	4.0"	4.0"	4.0"	4.0"	3.0"	3.0"	3.0"	3.0"	3.0"	3.0"	3.0"	3.0"	3.0"	2.0"	2.0"	2.0"	2.0"	2.0"
		50	8.0"	7.0"	6.0"	6.0"	5.0"	5.0"	4.0"	4.0"	4.0"	4.0"	4.0"	3.0"	3.0"	3.0"	3.0"	3.0"	3.0"	3.0"	3.0"	2.0"	2.0"	2.0"	2.0"	2.0"	2.0"	2.0"	2.0"
		55	7.0"	6.0"	6.0"	5.0"	5.0"	4.0"	4.0"	4.0"	4.0"	3.0"	3.0"	3.0"	3.0"	3.0"	3.0"	3.0"	3.0"	3.0"	2.0"	2.0"	2.0"	2.0"	2.0"	2.0"	2.0"	2.0"	2.0"
		60	7.0"	6.0"	5.0"	5.0"	4.0"	4.0"	4.0"	4.0"	3.0"	3.0"	3.0"	3.0"	3.0"	3.0"	3.0"	2.0"	2.0"	2.0"	2.0"	2.0"	2.0"	2.0"	2.0"	2.0"	2.0"	2.0"	2.0"
		65	6.0"	6.0"	5.0"	5.0"	4.0"	4.0"	4.0"	3.0"	3.0"	3.0"	3.0"	3.0"	3.0"	2.0"	2.0"	2.0"	2.0"	2.0"	2.0"	2.0"	2.0"	2.0"	2.0"	2.0"	2.0"	2.0"	2.0"
		70	6.0"	5.0"	5.0"	4.0"	4.0"	4.0"	3.0"	3.0"	3.0"	3.0"	3.0"	3.0"	2.0"	2.0"	2.0"	2.0"	2.0"	2.0"	2.0"	2.0"	2.0"	2.0"	2.0"	2.0"	2.0"	2.0"	
		75	6.0"	5.0"	4.0"	4.0"	4.0"	3.0"	3.0"	3.0"	3.0"	3.0"	3.0"	2.0"	2.0"	2.0"	2.0"	2.0"	2.0"	2.0"	2.0"	2.0"	2.0"	2.0"	2.0"				
		80	5.0"	5.0"	4.0"	4.0"	4.0"	3.0"	3.0"	3.0"	3.0"	3.0"	2.0"	2.0"	2.0"	2.0"	2.0"	2.0"	2.0"	2.0"	2.0"	2.0"	2.0"						
		85	5.0"	5.0"	4.0"	4.0"	3.0"	3.0"	3.0"	3.0"	3.0"	2.0"	2.0"	2.0"	2.0"	2.0"	2.0"	2.0"	2.0"	2.0"	2.0"	2.0"							
		90	5.0"	4.0"	4.0"	4.0"	3.0"	3.0"	3.0"	3.0"	2.0"	2.0"	2.0"	2.0"	2.0"	2.0"	2.0"	2.0"	2.0"	2.0"	2.0"								
		95	5.0"	4.0"	4.0"	3.0"	3.0"	3.0"	3.0"	2.0"	2.0"	2.0"	2.0"	2.0"	2.0"	2.0"	2.0"	2.0"	2.0"	2.0"									
		100	4.0"	4.0"	4.0"	3.0"	3.0"	3.0"	3.0"	2.0"	2.0"	2.0"	2.0"	2.0"	2.0"	2.0"	2.0"	2.0"	2.0"										
		105	4.0"	4.0"	3.0"	3.0"	3.0"	3.0"	2.0"	2.0"	2.0"	2.0"	2.0"	2.0"	2.0"	2.0"	2.0"												
		110	4.0"	4.0"	3.0"	3.0"	3.0"	3.0"	2.0"	2.0"	2.0"	2.0"	2.0"	2.0"	2.0"	2.0"													
		115	4.0"	4.0"	3.0"	3.0"	3.0"	2.0"	2.0"	2.0"	2.0"	2.0"	2.0"	2.0"	2.0"														
		120	4.0"	3.0"	3.0"	3.0"	3.0"	2.0"	2.0"	2.0"	2.0"	2.0"	2.0"	2.0"															
		125	4.0"	3.0"	3.0"	3.0"	2.0"	2.0"	2.0"	2.0"	2.0"	2.0"	2.0"																
		130	4.0"	3.0"	3.0"	3.0"	2.0"	2.0"	2.0"	2.0"	2.0"	2.0"	2.0"																
			3" MIN EDGE DISTANCE																										
	14-10 PANELMATE FEMALE ID 1-1/4" EMBEDMENT (CMU 2000 PSI)	30	9.0"	8.0"	7.0"	6.0"	6.0"	5.0"	5.0"	5.0"	5.0"	4.0"	4.0"	4.0"	4.0"	4.0"	3.0"	3.0"	3.0"	3.0"	3.0"	3.0"	3.0"	3.0"	3.0"	3.0"	2.0"	2.0"	2.0"
		35	8.0"	7.0"	6.0"	6.0"	5.0"	5.0"	5.0"	4.0"	4.0"	4.0"	4.0"	3.0"	3.0"	3.0"	3.0"	3.0"	3.0"	3.0"	3.0"	2.0"	2.0"	2.0"	2.0"	2.0"	2.0"	2.0"	2.0"
		40	7.0"	6.0"	6.0"	5.0"	5.0"	4.0"	4.0"	4.0"	4.0"	3.0"	3.0"	3.0"	3.0"	3.0"	3.0"	3.0"	3.0"	2.0"	2.0"	2.0"	2.0"	2.0"	2.0"	2.0"	2.0"	2.0"	2.0"
		45	6.0"	6.0"	5.0"	5.0"	4.0"	4.0"	4.0"	4.0"	3.0"	3.0"	3.0"	3.0"	3.0"	3.0"	2.0"	2.0"	2.0"	2.0"	2.0"	2.0"	2.0"	2.0"	2.0"	2.0"	2.0"	2.0"	2.0"
		50	6.0"	5.0"	5.0"	4.0"	4.0"	4.0"	3.0"	3.0"	3.0"	3.0"	3.0"	3.0"	3.0"	2.0"	2.0"	2.0"	2.0"	2.0"	2.0"	2.0"	2.0"	2.0"	2.0"	2.0"	2.0"	2.0"	
		55	5.0"	5.0"	4.0"	4.0"	4.0"	3.0"	3.0"	3.0"	3.0"	3.0"	3.0"	2.0"	2.0"	2.0"	2.0"	2.0"	2.0"	2.0"	2.0"	2.0"	2.0"	2.0"	2.0"				
		60	5.0"	5.0"	4.0"	4.0"	3.0"	3.0"	3.0"	3.0"	3.0"	2.0"	2.0"	2.0"	2.0"	2.0"	2.0"	2.0"	2.0"	2.0"	2.0"	2.0"	2.0"						
		65	5.0"	4.0"	4.0"	4.0"	3.0"	3.0"	3.0"	3.0"	2.0"	2.0"	2.0"	2.0"	2.0"	2.0"	2.0"	2.0"	2.0"	2.0"	2.0"								
		70	5.0"	4.0"	4.0"	3.0"	3.0"	3.0"	3.0"	2.0"	2.0"	2.0"	2.0"	2.0"	2.0"	2.0"	2.0"	2.0"	2.0"										
		75	4.0"	4.0"	3.0"	3.0"	3.0"	3.0"	2.0"	2.0"	2.0"	2.0"	2.0"	2.0"	2.0"	2.0"	2.0"												
		80	4.0"	4.0"	3.0"	3.0"	3.0"	3.0"	2.0"	2.0"	2.0"	2.0"	2.0"	2.0"	2.0"	2.0"													
		85	4.0"	3.0"	3.0"	3.0"	3.0"	2.0"	2.0"	2.0"	2.0"	2.0"	2.0"	2.0"	2.0"														
		90	4.0"	3.0"	3.0"	3.0"	2.0"	2.0"	2.0"	2.0"	2.0"	2.0"	2.0"	2.0"															
		95	4.0"	3.0"	3.0"	3.0"	2.0"	2.0"	2.0"	2.0"	2.0"	2.0"	2.0"																
		100	3.0"	3.0"	3.0"	2.0"	2.0"	2.0"	2.0"	2.0"	2.0"	2.0"																	
		105	3.0"	3.0"	3.0"	2.0"	2.0"	2.0"	2.0"	2.0"	2.0"																		
		110	3.0"	3.0"	3.0"	2.0"	2.0"	2.0"	2.0"	2.0"	2.0"																		
		115	3.0"	3.0"	2.0"	2.0"	2.0"	2.0"	2.0"	2.0"																			
		120	3.0"	3.0"	2.0"	2.0"	2.0"	2.0"	2.0"	2.0"																			
		125	3.0"	3.0"	2.0"	2.0"	2.0"	2.0"	2.0"																				
		130	3.0"	2.0"	2.0"	2.0"	2.0"	2.0"	2.0"																				

HOST STRUCT.	ANCHOR TYPE	LOAD (psf)	SPANS 16' ≤ 16'-6"	SPANS 16'-7" ≤ 17'	SPANS 17' ≤ 17'-6"	SPANS 17'-7" ≤ 18'	SPANS 18' ≤ 18'-6"	SPANS 18'-7" ≤ 19'	SPANS 19' ≤ 19'-6"	SPANS 19'-7" ≤ 20'	SPANS 20' ≤ 20'-6"	SPANS 20'-7" ≤ 21'	SPANS 21' ≤ 21'-6"	SPANS 21'-7" ≤ 22'	SPANS 22' ≤ 22'-6"	SPANS 22'-7" ≤ 23'	SPANS 23' ≤ 23'-6"	SPANS 23'-7" ≤ 24'	SPANS 24' ≤ 24'-6"	SPANS 24'-7" ≤ 25'	SPANS 25' ≤ 25'-6"	SPANS 25'-7" ≤ 26'
			3" MIN EDGE DISTANCE																			
HOLLOW BLOCK	14-10 PANELMATE PRO, PLUS, TVAS 1-1/4" EMBEDMENT (CMU 2000 PSI)	30	3.0"	3.0"	3.0"	3.0"	3.0"	3.0"	3.0"	3.0"	2.0"	2.0"	2.0"	2.0"	2.0"	2.0"	2.0"	2.0"	2.0"	2.0"	2.0"	2.0"
		35	3.0"	3.0"	2.0"	2.0"	2.0"	2.0"	2.0"	2.0"	2.0"	2.0"	2.0"	2.0"	2.0"	2.0"	2.0"	2.0"	2.0"	2.0"	2.0"	2.0"
		40	2.0"	2.0"	2.0"	2.0"	2.0"	2.0"	2.0"	2.0"	2.0"	2.0"	2.0"	2.0"	2.0"	2.0"	2.0"	2.0"	2.0"	2.0"	2.0"	2.0"
		45	2.0"	2.0"	2.0"	2.0"	2.0"	2.0"	2.0"	2.0"	2.0"	2.0"	2.0"	2.0"	2.0"	2.0"						
		50	2.0"	2.0"	2.0"	2.0"	2.0"	2.0"	2.0"	2.0"	2.0"	2.0"										
		55	2.0"	2.0"	2.0"	2.0"	2.0"	2.0"														
		60	2.0"	2.0"	2.0"																	
			3" MIN EDGE DISTANCE																			
	14-10 PANELMATE FEMALE ID 1-1/4" EMBEDMENT (CMU 2000 PSI)	30	2.0"	2.0"	2.0"	2.0"	2.0"	2.0"	2.0"	2.0"	2.0"	2.0"	2.0"	2.0"	2.0"	2.0"	2.0"	2.0"	2.0"	2.0"	2.0"	2.0"
		35	2.0"	2.0"	2.0"	2.0"	2.0"	2.0"	2.0"	2.0"	2.0"	2.0"	2.0"	2.0"								
		40	2.0"	2.0"	2.0"	2.0"	2.0"	2.0"	2.0"													
		45	2.0"	2.0"																		
		50																				
		55																				
		60																				

NOTES:

1. APPROVED FOR USE ATTACHING GROMMET SCREENS & ALL TRACKS OR STUDDED ANGLE WITH ¼" SIDEWALK BOLT

FRANK L. BENNARDO, P.E.
PE# 0046549
10/20/2017
IF CHECKED, CERTIFICATE PER REPORT BELOW
FRANK L. BENNARDO, P.E.
46549

ENGINEERING EXPRESS®
CORPORATE OFFICE:
160 SW 12th AVE, SUITE 106
DEERFIELD BEACH, FL 33442
P: (954) 354-0660 F: (954) 354-0443
E: HELLO@ENGINEERINGEXPRESS.COM
ENGINEERINGEXPRESS.COM
CERT OF AUTH #9885

STORM SMART INDUSTRIES, INC.
6182 IDLEWILD STREET
FORT MYERS , FL
(239) 938-1000

STORM CATCHER WIND ABATEMENT SYSTEM FL11291.2 HVHZ
-
-, FL

REMARKS	DRWN	CHKD	DATE
INIT ISSUE	RWN	FLB	10/18/17

THIS DOCUMENT IS THE PROPERTY OF ENGINEERING EXPRESS, AND SHALL NOT BE REPRODUCED IN WHOLE OR PART WITHOUT WRITTEN CONSENT OF ENGINEERING EXPRESS. ALTERATIONS, ADDITIONS, OR OTHER MARKINGS TO THIS DOCUMENT ARE NOT PERMITTED AND INVALIDATE OUR CERTIFICATION.

COPYRIGHT ENGINEERING EXPRESS®

16-3080

SCALE: NTS UNLESS NOTED

V:\Projects\16-3080 Storm Catcher Wind Abatement System FL11291-R4\WP\2017 FBC Update\16-3080e-Dwg-11291.2.dwg
zachr
10/20/2017 - 3:08pm

$\frac{5}{16}$" & $\frac{1}{4}$" ELCO ULTRACON HFH STRAP BRACKET SPACING

TABLE 19 - HOLLOW BLOCK

HOST STRUCT.	ANCHOR TYPE	LOAD (psf)	SPANS 0" ≤ 3'	SPANS 3' ≤ 3'-6"	SPANS 3'-7" ≤ 4'	SPANS 4' ≤ 4'-6"	SPANS 4'-7" ≤ 5'	SPANS 5' ≤ 5'-6"	SPANS 5'-7" ≤ 6'	SPANS 6' ≤ 6'-6"	SPANS 6'-7" ≤ 7'	SPANS 7' ≤ 7'-6"	SPANS 7'-7" ≤ 8'	SPANS 8' ≤ 8'-6"	SPANS 8'-7" ≤ 9'	SPANS 9' ≤ 9'-6"	SPANS 9'-7" ≤ 10'	SPANS 10' ≤ 10'-6"	SPANS 10'-7" ≤ 11'	SPANS 11' ≤ 11'-6"	SPANS 11'-7" ≤ 12'	SPANS 12' ≤ 12'-6"	SPANS 12'-7" ≤ 13'	SPANS 13' ≤ 13'-6"	SPANS 13'-7" ≤ 14'	SPANS 14' ≤ 14'-6"	SPANS 14'-7" ≤ 15'	SPANS 15' ≤ 15'-6"	SPANS 15'-7" ≤ 16'
			3-1/8" MIN EDGE DISTANCE																										
HOLLOW BLOCK	5/16" ELCO ULTRACON HFH 1-1/4" EMBEDMENT	30	18.0"	18.0"	18.0"	17.0"	15.0"	14.0"	13.0"	13.0"	12.0"	11.0"	11.0"	10.0"	10.0"	10.0"	9.0"	9.0"	9.0"	8.0"	8.0"	8.0"	8.0"	7.0"	7.0"	7.0"	7.0"	7.0"	6.0"
		35	18.0"	18.0"	16.0"	15.0"	14.0"	13.0"	12.0"	11.0"	11.0"	10.0"	10.0"	9.0"	9.0"	9.0"	8.0"	8.0"	8.0"	7.0"	7.0"	7.0"	7.0"	6.0"	6.0"	6.0"	6.0"	6.0"	6.0"
		40	18.0"	16.0"	15.0"	13.0"	12.0"	12.0"	11.0"	10.0"	10.0"	9.0"	9.0"	8.0"	8.0"	8.0"	7.0"	7.0"	7.0"	7.0"	6.0"	6.0"	6.0"	6.0"	6.0"	6.0"	N/A	N/A	N/A
		45	17.0"	15.0"	13.0"	12.0"	11.0"	11.0"	10.0"	9.0"	9.0"	8.0"	8.0"	8.0"	7.0"	7.0"	7.0"	6.0"	6.0"	6.0"	6.0"	6.0"	N/A	N/A	N/A	N/A	N/A	N/A	N/A
		50	15.0"	14.0"	12.0"	11.0"	11.0"	10.0"	9.0"	9.0"	8.0"	8.0"	7.0"	7.0"	7.0"	6.0"	6.0"	6.0"	6.0"	6.0"	6.0"	N/A	N/A	N/A	N/A	N/A	N/A	N/A	N/A
		55	14.0"	13.0"	12.0"	11.0"	10.0"	9.0"	9.0"	8.0"	8.0"	7.0"	7.0"	7.0"	6.0"	6.0"	6.0"	6.0"	N/A	N/A	N/A	N/A	N/A	N/A	N/A	N/A	N/A	N/A	N/A
		60	13.0"	12.0"	11.0"	10.0"	9.0"	9.0"	8.0"	8.0"	7.0"	7.0"	6.0"	6.0"	6.0"	6.0"	N/A	N/A	N/A	N/A	N/A	N/A	N/A	N/A	N/A	N/A	N/A	N/A	N/A
		65	13.0"	11.0"	10.0"	9.0"	9.0"	8.0"	8.0"	7.0"	7.0"	6.0"	6.0"	6.0"	N/A	N/A	N/A	N/A	N/A	N/A	N/A	N/A	N/A	N/A	N/A	N/A	N/A	N/A	N/A
		70	12.0"	11.0"	10.0"	9.0"	8.0"	8.0"	7.0"	7.0"	6.0"	6.0"	6.0"	N/A	N/A	N/A	N/A	N/A	N/A	N/A	N/A	N/A	N/A	N/A	N/A	N/A	N/A	N/A	N/A
		75	11.0"	10.0"	9.0"	8.0"	8.0"	7.0"	7.0"	6.0"	6.0"	6.0"	N/A	N/A	N/A	N/A	N/A	N/A	N/A	N/A	N/A	N/A	N/A	N/A	N/A	N/A	N/A	N/A	N/A
		80	11.0"	10.0"	9.0"	8.0"	7.0"	7.0"	6.0"	6.0"	6.0"	N/A	N/A	N/A	N/A	N/A	N/A	N/A	N/A	N/A	N/A	N/A	N/A	N/A	N/A	N/A	N/A	N/A	N/A
		85	10.0"	9.0"	8.0"	8.0"	7.0"	7.0"	6.0"	6.0"	N/A	N/A	N/A	N/A	N/A	N/A	N/A	N/A	N/A	N/A	N/A	N/A	N/A	N/A	N/A	N/A	N/A	N/A	N/A
		90	10.0"	9.0"	8.0"	7.0"	7.0"	6.0"	6.0"	N/A	N/A	N/A	N/A	N/A	N/A	N/A	N/A	N/A	N/A	N/A	N/A	N/A	N/A	N/A	N/A	N/A	N/A	N/A	N/A
		95	10.0"	9.0"	8.0"	7.0"	6.0"	6.0"	6.0"	N/A	N/A	N/A	N/A	N/A	N/A	N/A	N/A	N/A	N/A	N/A	N/A	N/A	N/A	N/A	N/A	N/A	N/A	N/A	N/A
		100	9.0"	8.0"	7.0"	7.0"	6.0"	6.0"	N/A	N/A	N/A	N/A	N/A	N/A	N/A	N/A	N/A	N/A	N/A	N/A	N/A	N/A	N/A	N/A	N/A	N/A	N/A	N/A	N/A
		105	9.0"	8.0"	7.0"	6.0"	6.0"	6.0"	N/A	N/A	N/A	N/A	N/A	N/A	N/A	N/A	N/A	N/A	N/A	N/A	N/A	N/A	N/A	N/A	N/A	N/A	N/A	N/A	N/A
		110	9.0"	8.0"	7.0"	6.0"	6.0"	N/A	N/A	N/A	N/A	N/A	N/A	N/A	N/A	N/A	N/A	N/A	N/A	N/A	N/A	N/A	N/A	N/A	N/A	N/A	N/A	N/A	N/A
		115	8.0"	7.0"	7.0"	6.0"	6.0"	N/A	N/A	N/A	N/A	N/A	N/A	N/A	N/A	N/A	N/A	N/A	N/A	N/A	N/A	N/A	N/A	N/A	N/A	N/A	N/A	N/A	N/A
		120	8.0"	7.0"	6.0"	6.0"	N/A	N/A	N/A	N/A	N/A	N/A	N/A	N/A	N/A	N/A	N/A	N/A	N/A	N/A	N/A	N/A	N/A	N/A	N/A	N/A	N/A	N/A	N/A
		125	8.0"	7.0"	6.0"	6.0"	N/A	N/A	N/A	N/A	N/A	N/A	N/A	N/A	N/A	N/A	N/A	N/A	N/A	N/A	N/A	N/A	N/A	N/A	N/A	N/A	N/A	N/A	N/A
		130	8.0"	7.0"	6.0"	N/A	N/A	N/A	N/A	N/A	N/A	N/A	N/A	N/A	N/A	N/A	N/A	N/A	N/A	N/A	N/A	N/A	N/A	N/A	N/A	N/A	N/A	N/A	N/A
			2 1/2" MIN EDGE DISTANCE																										
	1/4" ELCO ULTRACON HFH 1-1/4" EMBEDMENT	30	18.0"	18.0"	18.0"	18.0"	17.0"	15.0"	14.0"	14.0"	13.0"	12.0"	12.0"	11.0"	11.0"	10.0"	10.0"	9.0"	9.0"	9.0"	8.0"	8.0"	8.0"	8.0"	7.0"	7.0"	7.0"	7.0"	7.0"
		35	18.0"	18.0"	18.0"	16.0"	15.0"	14.0"	13.0"	12.0"	11.0"	11.0"	10.0"	10.0"	9.0"	9.0"	9.0"	8.0"	8.0"	8.0"	7.0"	7.0"	7.0"	7.0"	7.0"	6.0"	6.0"	6.0"	6.0"
		40	18.0"	18.0"	16.0"	14.0"	13.0"	12.0"	12.0"	11.0"	10.0"	10.0"	9.0"	9.0"	8.0"	8.0"	8.0"	7.0"	7.0"	7.0"	7.0"	6.0"	6.0"	6.0"	6.0"	6.0"	N/A	N/A	N/A
		45	18.0"	16.0"	14.0"	13.0"	12.0"	11.0"	11.0"	10.0"	9.0"	9.0"	8.0"	8.0"	8.0"	7.0"	7.0"	7.0"	6.0"	6.0"	6.0"	6.0"	6.0"	N/A	N/A	N/A	N/A	N/A	N/A
		50	17.0"	15.0"	13.0"	12.0"	11.0"	10.0"	10.0"	9.0"	9.0"	8.0"	8.0"	7.0"	7.0"	7.0"	6.0"	6.0"	6.0"	6.0"	N/A	N/A	N/A	N/A	N/A	N/A	N/A	N/A	N/A
		55	15.0"	14.0"	12.0"	11.0"	10.0"	10.0"	9.0"	8.0"	8.0"	8.0"	7.0"	7.0"	6.0"	6.0"	6.0"	6.0"	N/A	N/A	N/A	N/A	N/A	N/A	N/A	N/A	N/A	N/A	N/A
		60	14.0"	13.0"	12.0"	11.0"	10.0"	9.0"	8.0"	8.0"	7.0"	7.0"	7.0"	6.0"	6.0"	6.0"	N/A	N/A	N/A	N/A	N/A	N/A	N/A	N/A	N/A	N/A	N/A	N/A	N/A
		65	14.0"	12.0"	11.0"	10.0"	9.0"	8.0"	8.0"	7.0"	7.0"	7.0"	6.0"	6.0"	6.0"	N/A	N/A	N/A	N/A	N/A	N/A	N/A	N/A	N/A	N/A	N/A	N/A	N/A	N/A
		70	13.0"	11.0"	10.0"	9.0"	9.0"	8.0"	7.0"	7.0"	7.0"	6.0"	6.0"	6.0"	N/A	N/A	N/A	N/A	N/A	N/A	N/A	N/A	N/A	N/A	N/A	N/A	N/A	N/A	N/A
		75	12.0"	11.0"	10.0"	9.0"	8.0"	8.0"	7.0"	7.0"	6.0"	6.0"	N/A	N/A	N/A	N/A	N/A	N/A	N/A	N/A	N/A	N/A	N/A	N/A	N/A	N/A	N/A	N/A	N/A
		80	12.0"	10.0"	9.0"	8.0"	8.0"	7.0"	7.0"	6.0"	6.0"	N/A	N/A	N/A	N/A	N/A	N/A	N/A	N/A	N/A	N/A	N/A	N/A	N/A	N/A	N/A	N/A	N/A	N/A
		85	11.0"	10.0"	9.0"	8.0"	7.0"	7.0"	6.0"	6.0"	6.0"	N/A	N/A	N/A	N/A	N/A	N/A	N/A	N/A	N/A	N/A	N/A	N/A	N/A	N/A	N/A	N/A	N/A	N/A
		90	11.0"	9.0"	8.0"	8.0"	7.0"	6.0"	6.0"	6.0"	N/A	N/A	N/A	N/A	N/A	N/A	N/A	N/A	N/A	N/A	N/A	N/A	N/A	N/A	N/A	N/A	N/A	N/A	N/A
		95	10.0"	9.0"	8.0"	7.0"	7.0"	6.0"	6.0"	N/A	N/A	N/A	N/A	N/A	N/A	N/A	N/A	N/A	N/A	N/A	N/A	N/A	N/A	N/A	N/A	N/A	N/A	N/A	N/A
		100	10.0"	9.0"	8.0"	7.0"	6.0"	6.0"	N/A	N/A	N/A	N/A	N/A	N/A	N/A	N/A	N/A	N/A	N/A	N/A	N/A	N/A	N/A	N/A	N/A	N/A	N/A	N/A	N/A
		105	9.0"	8.0"	7.0"	7.0"	6.0"	6.0"	N/A	N/A	N/A	N/A	N/A	N/A	N/A	N/A	N/A	N/A	N/A	N/A	N/A	N/A	N/A	N/A	N/A	N/A	N/A	N/A	N/A
		110	9.0"	8.0"	7.0"	6.0"	6.0"	N/A	N/A	N/A	N/A	N/A	N/A	N/A	N/A	N/A	N/A	N/A	N/A	N/A	N/A	N/A	N/A	N/A	N/A	N/A	N/A	N/A	N/A
		115	9.0"	8.0"	7.0"	6.0"	6.0"	N/A	N/A	N/A	N/A	N/A	N/A	N/A	N/A	N/A	N/A	N/A	N/A	N/A	N/A	N/A	N/A	N/A	N/A	N/A	N/A	N/A	N/A
		120	8.0"	7.0"	7.0"	6.0"	N/A	N/A	N/A	N/A	N/A	N/A	N/A	N/A	N/A	N/A	N/A	N/A	N/A	N/A	N/A	N/A	N/A	N/A	N/A	N/A	N/A	N/A	N/A
		125	8.0"	7.0"	6.0"	6.0"	N/A	N/A	N/A	N/A	N/A	N/A	N/A	N/A	N/A	N/A	N/A	N/A	N/A	N/A	N/A	N/A	N/A	N/A	N/A	N/A	N/A	N/A	N/A
		130	8.0"	7.0"	6.0"	6.0"	N/A	N/A	N/A	N/A	N/A	N/A	N/A	N/A	N/A	N/A	N/A	N/A	N/A	N/A	N/A	N/A	N/A	N/A	N/A	N/A	N/A	N/A	N/A

NOTES:
1. THIS SPACING IS APPROVED FOR USE ATTACHING STRAP BRACKETS ONLY

FRANK L. BENNARDO, P.E.
PE# 0046549
10/20/2017
IF CHECKED, CONFIRMING P.E. APPEARS BELOW
FRANK L. BENNARDO, P.E.
46549

FRANK L. BENNARDO LICENSE No PE0046549 STATE OF FLORIDA PROFESSIONAL ENGINEER

ENGINEERING EXPRESS®
CORPORATE OFFICE:
160 SW 12th AVE, SUITE 106
DEERFIELD BEACH, FL 33442
P: (954) 354-0660 F: (954) 354-0443
E: HELLO@ENGINEERINGEXPRESS.COM
ENGINEERINGEXPRESS.COM
CERT OF AUTH #9885

STORM SMART INDUSTRIES, INC.
6182 IDLEWILD STREET
FORT MYERS , FL
(239) 938-1000

STORM CATCHER WIND ABATEMENT SYSTEM FL11291.2 HVHZ
-
-, FL

REMARKS	DRWN	CHKD	DATE
INIT ISSUE	RWN	FLB	10/18/17

THIS DOCUMENT IS THE PROPERTY OF ENGINEERING EXPRESS, AND SHALL NOT BE REPRODUCED IN WHOLE OR PART WITHOUT WRITTEN CONSENT OF ENGINEERING EXPRESS. ALTERATIONS, ADDITIONS, OR OTHER MARKINGS TO THIS DOCUMENT ARE NOT PERMITTED AND INVALIDATE OUR CERTIFICATION.

COPYRIGHT ENGINEERING EXPRESS ®

16-3080

SCALE: NTS UNLESS NOTED

10/20/2017 - 3:08pm zachr V:\Projects\16-3080 Storm Catcher Wind Abatement System FL11291-R4\WP\2017 FBC Update\16-3080e-Dwg-11291.2.dwg

TABLE 20 - WOOD

$\frac{5}{16}$" & $\frac{1}{4}$" ULTACONS & $\frac{1}{4}$" WOOD BUSHING

HOST STRUCT.	ANCHOR TYPE	LOAD (psf)	SPANS 0" ≤ 3'	SPANS 3' ≤ 3'-6"	SPANS 3'-7" ≤ 4'	SPANS 4' ≤ 3'-6"	SPANS 4'-7" ≤ 5'	SPANS 5' ≤ 5'-6"	SPANS 5'-7" ≤ 6'	SPANS 6' ≤ 6'-6"	SPANS 6'-7" ≤ 7'	SPANS 7' ≤ 7'-6"	SPANS 7'-7" ≤ 8'	SPANS 8' ≤ 8'-6"	SPANS 8'-7" ≤ 9'	SPANS 9' ≤ 9'-6"	SPANS 9'-7" ≤ 10'	SPANS 10' ≤ 10'-6"	SPANS 10'-7" ≤ 11'	SPANS 11' ≤ 11'-6"	SPANS 11'-7" ≤ 12'	SPANS 12' ≤ 12'-6"	SPANS 12'-7" ≤ 13'	SPANS 13' ≤ 13'-6"	SPANS 13'-7" ≤ 14'	SPANS 14' ≤ 14'-6"	SPANS 14'-7" ≤ 15'	SPANS 15' ≤ 15'-6"	SPANS 15'-7" ≤ 16'
			3/4" MIN EDGE DISTANCE																										
WOOD	5/16" ELCO ULTRACON HFH 1-1/2" THREAD PENETRATION	30	11.0"	10.0"	9.0"	8.0"	7.0"	7.0"	7.0"	6.0"	6.0"	6.0"	5.0"	5.0"	5.0"	5.0"	5.0"	4.0"	4.0"	4.0"	4.0"	4.0"	4.0"	4.0"	3.0"	3.0"	3.0"	3.0"	3.0"
		35	10.0"	9.0"	8.0"	7.0"	7.0"	6.0"	6.0"	6.0"	5.0"	5.0"	5.0"	5.0"	4.0"	4.0"	4.0"	4.0"	4.0"	3.0"	3.0"	3.0"	3.0"	3.0"	3.0"	3.0"	3.0"	3.0"	3.0"
		40	9.0"	8.0"	7.0"	7.0"	6.0"	6.0"	5.0"	5.0"	5.0"	5.0"	4.0"	4.0"	4.0"	4.0"	4.0"	3.0"	3.0"	3.0"	3.0"	3.0"	3.0"	3.0"	3.0"	3.0"	3.0"	3.0"	3.0"
		45	8.0"	7.0"	7.0"	6.0"	6.0"	5.0"	5.0"	5.0"	4.0"	4.0"	4.0"	4.0"	4.0"	3.0"	3.0"	3.0"	3.0"	3.0"	3.0"	3.0"	3.0"	3.0"	2.0"	2.0"	2.0"	2.0"	2.0"
		50	7.0"	7.0"	6.0"	6.0"	5.0"	5.0"	5.0"	4.0"	4.0"	4.0"	4.0"	3.0"	3.0"	3.0"	3.0"	3.0"	3.0"	3.0"	3.0"	3.0"	2.0"	2.0"	2.0"	2.0"	2.0"	2.0"	2.0"
		55	7.0"	6.0"	6.0"	5.0"	5.0"	4.0"	4.0"	4.0"	4.0"	4.0"	3.0"	3.0"	3.0"	3.0"	3.0"	3.0"	3.0"	3.0"	2.0"	2.0"	2.0"	2.0"	2.0"	2.0"	2.0"	2.0"	2.0"
		60	7.0"	6.0"	5.0"	5.0"	5.0"	4.0"	4.0"	4.0"	3.0"	3.0"	3.0"	3.0"	3.0"	3.0"	3.0"	3.0"	2.0"	2.0"	2.0"	2.0"	2.0"	2.0"	2.0"	2.0"	2.0"	2.0"	2.0"
		65	6.0"	6.0"	5.0"	5.0"	4.0"	4.0"	4.0"	3.0"	3.0"	3.0"	3.0"	3.0"	3.0"	3.0"	2.0"	2.0"	2.0"	2.0"	2.0"	2.0"	2.0"	2.0"	2.0"	2.0"	2.0"	2.0"	2.0"
		70	6.0"	5.0"	5.0"	4.0"	4.0"	4.0"	3.0"	3.0"	3.0"	3.0"	3.0"	3.0"	3.0"	2.0"	2.0"	2.0"	2.0"	2.0"	2.0"	2.0"	2.0"	2.0"	2.0"	2.0"	2.0"	2.0"	2.0"
		75	6.0"	5.0"	5.0"	4.0"	4.0"	4.0"	3.0"	3.0"	3.0"	3.0"	3.0"	3.0"	2.0"	2.0"	2.0"	2.0"	2.0"	2.0"	2.0"	2.0"	2.0"	2.0"	2.0"	2.0"	2.0"	2.0"	
		80	5.0"	5.0"	4.0"	4.0"	4.0"	3.0"	3.0"	3.0"	3.0"	3.0"	3.0"	2.0"	2.0"	2.0"	2.0"	2.0"	2.0"	2.0"	2.0"	2.0"	2.0"	2.0"	2.0"	2.0"			
		85	5.0"	5.0"	4.0"	4.0"	3.0"	3.0"	3.0"	3.0"	3.0"	3.0"	2.0"	2.0"	2.0"	2.0"	2.0"	2.0"	2.0"	2.0"	2.0"	2.0"	2.0"	2.0"					
		90	5.0"	4.0"	4.0"	4.0"	3.0"	3.0"	3.0"	3.0"	3.0"	2.0"	2.0"	2.0"	2.0"	2.0"	2.0"	2.0"	2.0"	2.0"	2.0"	2.0"	2.0"						
		95	5.0"	4.0"	4.0"	3.0"	3.0"	3.0"	3.0"	3.0"	2.0"	2.0"	2.0"	2.0"	2.0"	2.0"	2.0"	2.0"	2.0"	2.0"	2.0"	2.0"							
		100	5.0"	4.0"	4.0"	3.0"	3.0"	3.0"	3.0"	2.0"	2.0"	2.0"	2.0"	2.0"	2.0"	2.0"	2.0"	2.0"	2.0"	2.0"	2.0"								
		105	4.0"	4.0"	3.0"	3.0"	3.0"	3.0"	3.0"	2.0"	2.0"	2.0"	2.0"	2.0"	2.0"	2.0"	2.0"	2.0"	2.0"										
		110	4.0"	4.0"	3.0"	3.0"	3.0"	3.0"	2.0"	2.0"	2.0"	2.0"	2.0"	2.0"	2.0"	2.0"	2.0"	2.0"											
		115	4.0"	4.0"	3.0"	3.0"	3.0"	2.0"	2.0"	2.0"	2.0"	2.0"	2.0"	2.0"	2.0"	2.0"	2.0"												
		120	4.0"	3.0"	3.0"	3.0"	3.0"	2.0"	2.0"	2.0"	2.0"	2.0"	2.0"	2.0"	2.0"	2.0"													
		125	4.0"	3.0"	3.0"	3.0"	3.0"	2.0"	2.0"	2.0"	2.0"	2.0"	2.0"	2.0"	2.0"														
		130	4.0"	3.0"	3.0"	3.0"	2.0"	2.0"	2.0"	2.0"	2.0"	2.0"	2.0"	2.0"															
			3/4" MIN EDGE DISTANCE																										
	1/4" ELCO ULTRACON HFH 1-1/2" THREAD PENETRATION	30	11.0"	9.0"	9.0"	8.0"	7.0"	7.0"	6.0"	6.0"	6.0"	5.0"	5.0"	5.0"	5.0"	5.0"	4.0"	4.0"	4.0"	4.0"	4.0"	4.0"	4.0"	4.0"	3.0"	3.0"	3.0"	3.0"	3.0"
		35	9.0"	8.0"	8.0"	7.0"	7.0"	6.0"	6.0"	5.0"	5.0"	5.0"	5.0"	4.0"	4.0"	4.0"	4.0"	4.0"	4.0"	3.0"	3.0"	3.0"	3.0"	3.0"	3.0"	3.0"	3.0"	3.0"	3.0"
		40	9.0"	8.0"	7.0"	6.0"	6.0"	6.0"	5.0"	5.0"	5.0"	4.0"	4.0"	4.0"	4.0"	4.0"	4.0"	3.0"	3.0"	3.0"	3.0"	3.0"	3.0"	3.0"	3.0"	3.0"	3.0"	3.0"	2.0"
		45	8.0"	7.0"	6.0"	6.0"	5.0"	5.0"	5.0"	5.0"	4.0"	4.0"	4.0"	4.0"	4.0"	3.0"	3.0"	3.0"	3.0"	3.0"	3.0"	3.0"	3.0"	3.0"	2.0"	2.0"	2.0"	2.0"	2.0"
		50	7.0"	7.0"	6.0"	5.0"	5.0"	5.0"	4.0"	4.0"	4.0"	4.0"	4.0"	3.0"	3.0"	3.0"	3.0"	3.0"	3.0"	3.0"	3.0"	3.0"	2.0"	2.0"	2.0"	2.0"	2.0"	2.0"	2.0"
		55	7.0"	6.0"	6.0"	5.0"	5.0"	4.0"	4.0"	4.0"	4.0"	3.0"	3.0"	3.0"	3.0"	3.0"	3.0"	3.0"	3.0"	3.0"	2.0"	2.0"	2.0"	2.0"	2.0"	2.0"	2.0"	2.0"	2.0"
		60	6.0"	6.0"	5.0"	5.0"	4.0"	4.0"	4.0"	4.0"	3.0"	3.0"	3.0"	3.0"	3.0"	3.0"	3.0"	2.0"	2.0"	2.0"	2.0"	2.0"	2.0"	2.0"	2.0"	2.0"	2.0"	2.0"	2.0"
		65	6.0"	5.0"	5.0"	5.0"	4.0"	4.0"	4.0"	3.0"	3.0"	3.0"	3.0"	3.0"	3.0"	3.0"	2.0"	2.0"	2.0"	2.0"	2.0"	2.0"	2.0"	2.0"	2.0"	2.0"	2.0"	2.0"	2.0"
		70	6.0"	5.0"	5.0"	4.0"	4.0"	4.0"	3.0"	3.0"	3.0"	3.0"	3.0"	3.0"	2.0"	2.0"	2.0"	2.0"	2.0"	2.0"	2.0"	2.0"	2.0"	2.0"	2.0"	2.0"	2.0"	2.0"	2.0"
		75	5.0"	5.0"	4.0"	4.0"	4.0"	3.0"	3.0"	3.0"	3.0"	3.0"	3.0"	2.0"	2.0"	2.0"	2.0"	2.0"	2.0"	2.0"	2.0"	2.0"	2.0"	2.0"	2.0"	2.0"	2.0"		
		80	5.0"	4.0"	4.0"	4.0"	3.0"	3.0"	3.0"	3.0"	3.0"	2.0"	2.0"	2.0"	2.0"	2.0"	2.0"	2.0"	2.0"	2.0"	2.0"	2.0"	2.0"	2.0"	2.0"				
		85	5.0"	4.0"	4.0"	3.0"	3.0"	3.0"	3.0"	3.0"	2.0"	2.0"	2.0"	2.0"	2.0"	2.0"	2.0"	2.0"	2.0"	2.0"	2.0"	2.0"	2.0"	2.0"					
		90	5.0"	4.0"	4.0"	3.0"	3.0"	3.0"	3.0"	2.0"	2.0"	2.0"	2.0"	2.0"	2.0"	2.0"	2.0"	2.0"	2.0"	2.0"	2.0"	2.0"	2.0"						
		95	5.0"	4.0"	4.0"	3.0"	3.0"	3.0"	3.0"	3.0"	2.0"	2.0"	2.0"	2.0"	2.0"	2.0"	2.0"	2.0"	2.0"	2.0"	2.0"	2.0"							
		100	4.0"	4.0"	4.0"	3.0"	3.0"	3.0"	3.0"	2.0"	2.0"	2.0"	2.0"	2.0"	2.0"	2.0"	2.0"	2.0"	2.0"	2.0"	2.0"								
		105	4.0"	4.0"	3.0"	3.0"	3.0"	3.0"	2.0"	2.0"	2.0"	2.0"	2.0"	2.0"	2.0"	2.0"	2.0"	2.0"											
		110	4.0"	4.0"	3.0"	3.0"	3.0"	3.0"	2.0"	2.0"	2.0"	2.0"	2.0"	2.0"	2.0"	2.0"	2.0"												
		115	4.0"	4.0"	3.0"	3.0"	3.0"	2.0"	2.0"	2.0"	2.0"	2.0"	2.0"	2.0"	2.0"	2.0"													
		120	4.0"	3.0"	3.0"	3.0"	3.0"	2.0"	2.0"	2.0"	2.0"	2.0"	2.0"	2.0"	2.0"														
		125	4.0"	3.0"	3.0"	3.0"	2.0"	2.0"	2.0"	2.0"	2.0"	2.0"	2.0"	2.0"	2.0"														
		130	4.0"	3.0"	3.0"	3.0"	2.0"	2.0"	2.0"	2.0"	2.0"	2.0"	2.0"	2.0"															
			3/4" MIN EDGE DISTANCE																										
	1/4" BRASS WOOD BUSHING 1-1/8" THREAD PENETRATION	30	10.0"	9.0"	8.0"	7.0"	7.0"	6.0"	6.0"	6.0"	5.0"	5.0"	5.0"	5.0"	4.0"	4.0"	4.0"	4.0"	4.0"	4.0"	4.0"	3.0"	3.0"	3.0"	3.0"	3.0"	3.0"	3.0"	3.0"
		35	9.0"	8.0"	7.0"	7.0"	6.0"	6.0"	5.0"	5.0"	5.0"	5.0"	4.0"	4.0"	4.0"	4.0"	4.0"	3.0"	3.0"	3.0"	3.0"	3.0"	3.0"	3.0"	3.0"	3.0"	3.0"	3.0"	2.0"
		40	8.0"	7.0"	7.0"	6.0"	6.0"	5.0"	5.0"	5.0"	4.0"	4.0"	4.0"	4.0"	4.0"	3.0"	3.0"	3.0"	3.0"	3.0"	3.0"	3.0"	3.0"	3.0"	2.0"	2.0"	2.0"	2.0"	2.0"
		45	7.0"	7.0"	6.0"	5.0"	5.0"	5.0"	4.0"	4.0"	4.0"	4.0"	4.0"	3.0"	3.0"	3.0"	3.0"	3.0"	3.0"	3.0"	3.0"	2.0"	2.0"	2.0"	2.0"	2.0"	2.0"	2.0"	2.0"
		50	7.0"	6.0"	6.0"	5.0"	5.0"	4.0"	4.0"	4.0"	4.0"	3.0"	3.0"	3.0"	3.0"	3.0"	3.0"	3.0"	2.0"	2.0"	2.0"	2.0"	2.0"	2.0"	2.0"	2.0"	2.0"	2.0"	2.0"
		55	6.0"	6.0"	5.0"	5.0"	4.0"	4.0"	4.0"	4.0"	3.0"	3.0"	3.0"	3.0"	3.0"	3.0"	2.0"	2.0"	2.0"	2.0"	2.0"	2.0"	2.0"	2.0"	2.0"	2.0"	2.0"	2.0"	2.0"
		60	6.0"	5.0"	5.0"	4.0"	4.0"	4.0"	4.0"	3.0"	3.0"	3.0"	3.0"	3.0"	3.0"	2.0"	2.0"	2.0"	2.0"	2.0"	2.0"	2.0"	2.0"	2.0"	2.0"	2.0"	2.0"	2.0"	
		65	6.0"	5.0"	5.0"	4.0"	4.0"	4.0"	3.0"	3.0"	3.0"	3.0"	3.0"	2.0"	2.0"	2.0"	2.0"	2.0"	2.0"	2.0"	2.0"	2.0"	2.0"	2.0"	2.0"	2.0"			
		70	5.0"	5.0"	4.0"	4.0"	4.0"	3.0"	3.0"	3.0"	3.0"	3.0"	2.0"	2.0"	2.0"	2.0"	2.0"	2.0"	2.0"	2.0"	2.0"	2.0"	2.0"	2.0"					
		75	5.0"	5.0"	4.0"	4.0"	3.0"	3.0"	3.0"	3.0"	3.0"	2.0"	2.0"	2.0"	2.0"	2.0"	2.0"	2.0"	2.0"	2.0"	2.0"	2.0"	2.0"						
		80	5.0"	4.0"	4.0"	4.0"	3.0"	3.0"	3.0"	3.0"	2.0"	2.0"	2.0"	2.0"	2.0"	2.0"	2.0"	2.0"	2.0"	2.0"	2.0"								
		85	5.0"	4.0"	4.0"	3.0"	3.0"	3.0"	3.0"	2.0"	2.0"	2.0"	2.0"	2.0"	2.0"	2.0"	2.0"	2.0"	2.0"										
		90	4.0"	4.0"	4.0"	3.0"	3.0"	3.0"	3.0"	2.0"	2.0"	2.0"	2.0"	2.0"	2.0"	2.0"	2.0"	2.0"											
		95	4.0"	4.0"	3.0"	3.0"	3.0"	3.0"	2.0"	2.0"	2.0"	2.0"	2.0"	2.0"	2.0"	2.0"	2.0"												
		100	4.0"	4.0"	3.0"	3.0"	3.0"	2.0"	2.0"	2.0"	2.0"	2.0"	2.0"	2.0"	2.0"	2.0"													
		105	4.0"	3.0"	3.0"	3.0"	3.0"	2.0"	2.0"	2.0"	2.0"	2.0"	2.0"	2.0"	2.0"														
		110	4.0"	3.0"	3.0"	3.0"	2.0"	2.0"	2.0"	2.0"	2.0"	2.0"	2.0"	2.0"															
		115	4.0"	3.0"	3.0"	3.0"	2.0"	2.0"	2.0"	2.0"	2.0"	2.0"	2.0"																
		120	4.0"	3.0"	3.0"	3.0"	2.0"	2.0"	2.0"	2.0"	2.0"	2.0"																	
		125	3.0"	3.0"	3.0"	2.0"	2.0"	2.0"	2.0"	2.0"	2.0"	2.0"																	
		130	3.0"	3.0"	3.0"	2.0"	2.0"	2.0"	2.0"	2.0"	2.0"																		

HOST STRUCT.	ANCHOR TYPE	LOAD (psf)	SPANS 16' ≤ 16'-6"	SPANS 16'-7" ≤ 17'	SPANS 17' ≤ 17'-6"	SPANS 17'-7" ≤ 18'	SPANS 18' ≤ 18'-6"	SPANS 18'-7" ≤ 19'	SPANS 19' ≤ 19'-6"	SPANS 19'-7" ≤ 20'	SPANS 20' ≤ 20'-6"	SPANS 20'-7" ≤ 21'	SPANS 21' ≤ 21'-6"	SPANS 21'-7" ≤ 22'	SPANS 22' ≤ 22'-6"	SPANS 22'-7" ≤ 23'	SPANS 23' ≤ 23'-6"	SPANS 23'-7" ≤ 24'	SPANS 24' ≤ 24'-6"	SPANS 24'-7" ≤ 25'	SPANS 25' ≤ 25'-6"	SPANS 25'-7" ≤ 26'	SPANS 26' ≤ 26'-6"	SPANS 26'-7" ≤ 27'	SPANS 27' ≤ 27'-6"	SPANS 27'-7" ≤ 28'	SPANS 28' ≤ 28'-6"	SPANS 28'-7" ≤ 29'	SPANS 29' ≤ 29'-6"	SPANS 29'-7" ≤ 30'
			3/4" MIN EDGE DISTANCE																										
WOOD	5/16" ELCO ULTRACON HFH 1-1/2" THREAD PENETRATION	30	3.0"	3.0"	3.0"	3.0"	3.0"	3.0"	3.0"	3.0"	3.0"	3.0"	2.0"	2.0"	2.0"	2.0"	2.0"	2.0"	2.0"	2.0"	2.0"	2.0"	2.0"	2.0"	2.0"	2.0"	2.0"		
		35	3.0"	3.0"	3.0"	3.0"	2.0"	2.0"	2.0"	2.0"	2.0"	2.0"	2.0"	2.0"	2.0"	2.0"	2.0"	2.0"	2.0"	2.0"	2.0"	2.0"	2.0"	2.0"					
		40	2.0"	2.0"	2.0"	2.0"	2.0"	2.0"	2.0"	2.0"	2.0"	2.0"	2.0"	2.0"	2.0"	2.0"	2.0"	2.0"	2.0"	2.0"	2.0"	2.0"							
		45	2.0"	2.0"	2.0"	2.0"	2.0"	2.0"	2.0"	2.0"	2.0"	2.0"	2.0"	2.0"	2.0"	2.0"	2.0"	2.0"	2.0"	2.0"	2.0"								
		50	2.0"	2.0"	2.0"	2.0"	2.0"	2.0"	2.0"	2.0"	2.0"	2.0"	2.0"	2.0"	2.0"														
		55	2.0"	2.0"	2.0"	2.0"	2.0"	2.0"	2.0"	2.0"	2.0"	2.0"																	
		60	2.0"	2.0"	2.0"	2.0"	2.0"	2.0"																					
			3/4" MIN EDGE DISTANCE																										
	1/4" ELCO ULTRACON HFH 1-1/2" THREAD PENETRATION	30	3.0"	3.0"	3.0"	3.0"	3.0"	3.0"	3.0"	3.0"	3.0"	2.0"	2.0"	2.0"	2.0"	2.0"	2.0"	2.0"	2.0"	2.0"	2.0"	2.0"	2.0"	2.0"	2.0"				
		35	3.0"	3.0"	3.0"	2.0"	2.0"	2.0"	2.0"	2.0"	2.0"	2.0"	2.0"	2.0"	2.0"	2.0"	2.0"	2.0"	2.0"	2.0"	2.0"	2.0"	2.0"						
		40	2.0"	2.0"	2.0"	2.0"	2.0"	2.0"	2.0"	2.0"	2.0"	2.0"	2.0"	2.0"	2.0"	2.0"	2.0"	2.0"	2.0"	2.0"	2.0"								
		45	2.0"	2.0"	2.0"	2.0"	2.0"	2.0"	2.0"	2.0"	2.0"	2.0"	2.0"	2.0"	2.0"	2.0"	2.0"	2.0"	2.0"										
		50	2.0"	2.0"	2.0"	2.0"	2.0"	2.0"	2.0"	2.0"	2.0"	2.0"	2.0"	2.0"															
		55	2.0"	2.0"	2.0"	2.0"	2.0"	2.0"	2.0"	2.0"																			
		60	2.0"	2.0"	2.0"	2.0"	2.0"																						
			3/4" MIN EDGE DISTANCE																										
	1/4" BRASS WOOD BUSHING 1-1/8" THREAD PENETRATION	30	3.0"	3.0"	3.0"	3.0"	2.0"	2.0"	2.0"	2.0"	2.0"	2.0"	2.0"	2.0"	2.0"	2.0"	2.0"	2.0"	2.0"	2.0"	2.0"	2.0"	2.0"	2.0"					
		35	2.0"	2.0"	2.0"	2.0"	2.0"	2.0"	2.0"	2.0"	2.0"	2.0"	2.0"	2.0"	2.0"	2.0"	2.0"	2.0"	2.0"	2.0"	2.0"								
		40	2.0"	2.0"	2.0"	2.0"	2.0"	2.0"	2.0"	2.0"	2.0"	2.0"	2.0"	2.0"	2.0"	2.0"													
		45	2.0"	2.0"	2.0"	2.0"	2.0"	2.0"	2.0"	2.0"	2.0"	2.0"																	
		50	2.0"	2.0"	2.0"	2.0"	2.0"	2.0"																					
		55	2.0"	2.0"																									
		60																											

NOTES:

1. APPROVED FOR USE ATTACHING GROMMET SCREENS & ALL TRACKS OR STUDDED ANGLE & ¼" SIDEWALK BOLTS

FRANK L. BENNARDO, P.E.
PE# 0046549

LICENSE No PE0046549 STATE OF FLORIDA PROFESSIONAL ENGINEER

10/20/2017

IF ORIGINAL TEXT APPEARS RED IT IS AN ELECTRONIC SIGNATURE

FRANK L. BENNARDO, P.E.
46549

ENGINEERING EXPRESS®
CORPORATE OFFICE:
160 SW 12th AVE, SUITE 106
DEERFIELD BEACH, FL 33442
P: (954) 354-0660 F: (954) 354-0443
E: HELLO@ENGINEERINGEXPRESS.COM
ENGINEERINGEXPRESS.COM
CERT OF AUTH #9885

STORM SMART INDUSTRIES, INC.
6182 IDLEWILD STREET
FORT MYERS , FL
(239) 938-1000

STORM CATCHER WIND ABATEMENT SYSTEM FL11291.2 HVHZ
-
-, FL

REMARKS	DRWN	CHKD	DATE
INIT ISSUE	RWN	FLB	10/18/17

THIS DOCUMENT IS THE PROPERTY OF ENGINEERING EXPRESS, AND SHALL NOT BE REPRODUCED IN WHOLE OR PART WITHOUT WRITTEN CONSENT OF ENGINEERING EXPRESS. ALTERATIONS, ADDITIONS, OR OTHER MARKINGS TO THIS DOCUMENT ARE NOT PERMITTED AND INVALIDATE OUR CERTIFICATION.

COPYRIGHT ENGINEERING EXPRESS ®

16-3080

SCALE: NTS UNLESS NOTED

10/20/2017 - 3:08pm zachr V:\Projects\16-3080 Storm Catcher Wind Abatement System FL11291-R4\WP\2017 FBC Update\16-3080e-Dwg-11291.2.dwg

¼" & #14 PANELMATE

TABLE 21 - WOOD

HOST STRUCT.	ANCHOR TYPE	LOAD (psf)	SPANS 0" ≤ 3'	SPANS 3' ≤ 3'-6"	SPANS 3'-7" ≤ 4'	SPANS 4' ≤ 3'-6"	SPANS 4'-7" ≤ 5'	SPANS 5' ≤ 5'-6"	SPANS 5'-7" ≤ 6'	SPANS 6' ≤ 6'-6"	SPANS 6'-7" ≤ 7'	SPANS 7' ≤ 7'-6"	SPANS 7'-7" ≤ 8'	SPANS 8' ≤ 8'-6"	SPANS 8'-7" ≤ 9'	SPANS 9' ≤ 9'-6"	SPANS 9'-7" ≤ 10'	SPANS 10' ≤ 10'-6"	SPANS 10'-7" ≤ 11'	SPANS 11' ≤ 11'-6"	SPANS 11'-7" ≤ 12'	SPANS 12' ≤ 12'-6"	SPANS 12'-7" ≤ 13'	SPANS 13' ≤ 13'-6"	SPANS 13'-7" ≤ 14'	SPANS 14' ≤ 14'-6"	SPANS 14'-7" ≤ 15'	SPANS 15' ≤ 15'-6"	SPANS 15'-7" ≤ 16'
			2" MIN EDGE DISTANCE																										
WOOD	1/4" PANELMATE INSERT 1-5/8" EMBEDMENT (#2SYP w/ SG .55)	30	11.0"	10.0"	9.0"	8.0"	7.0"	7.0"	7.0"	6.0"	6.0"	6.0"	5.0"	5.0"	5.0"	5.0"	5.0"	4.0"	4.0"	4.0"	4.0"	4.0"	4.0"	4.0"	3.0"	3.0"	3.0"	3.0"	3.0"
		35	10.0"	9.0"	8.0"	7.0"	7.0"	6.0"	6.0"	6.0"	5.0"	5.0"	5.0"	5.0"	4.0"	4.0"	4.0"	4.0"	4.0"	4.0"	3.0"	3.0"	3.0"	3.0"	3.0"	3.0"	3.0"	3.0"	3.0"
		40	9.0"	8.0"	7.0"	7.0"	6.0"	6.0"	5.0"	5.0"	5.0"	5.0"	4.0"	4.0"	4.0"	4.0"	4.0"	3.0"	3.0"	3.0"	3.0"	3.0"	3.0"	3.0"	3.0"	3.0"	3.0"	3.0"	3.0"
		45	8.0"	7.0"	7.0"	6.0"	6.0"	5.0"	5.0"	5.0"	4.0"	4.0"	4.0"	4.0"	4.0"	3.0"	3.0"	3.0"	3.0"	3.0"	3.0"	3.0"	3.0"	3.0"	2.0"	2.0"	2.0"	2.0"	2.0"
		50	7.0"	7.0"	6.0"	6.0"	5.0"	5.0"	5.0"	4.0"	4.0"	4.0"	4.0"	3.0"	3.0"	3.0"	3.0"	3.0"	3.0"	3.0"	3.0"	3.0"	2.0"	2.0"	2.0"	2.0"	2.0"	2.0"	2.0"
		55	7.0"	6.0"	6.0"	5.0"	5.0"	4.0"	4.0"	4.0"	4.0"	4.0"	3.0"	3.0"	3.0"	3.0"	3.0"	3.0"	3.0"	3.0"	2.0"	2.0"	2.0"	2.0"	2.0"	2.0"	2.0"	2.0"	2.0"
		60	7.0"	6.0"	5.0"	5.0"	5.0"	4.0"	4.0"	4.0"	4.0"	3.0"	3.0"	3.0"	3.0"	3.0"	3.0"	3.0"	3.0"	2.0"	2.0"	2.0"	2.0"	2.0"	2.0"	2.0"	2.0"	2.0"	2.0"
		65	6.0"	6.0"	5.0"	5.0"	4.0"	4.0"	4.0"	3.0"	3.0"	3.0"	3.0"	3.0"	3.0"	3.0"	2.0"	2.0"	2.0"	2.0"	2.0"	2.0"	2.0"	2.0"	2.0"	2.0"	2.0"	2.0"	2.0"
		70	6.0"	5.0"	5.0"	4.0"	4.0"	4.0"	3.0"	3.0"	3.0"	3.0"	3.0"	3.0"	3.0"	2.0"	2.0"	2.0"	2.0"	2.0"	2.0"	2.0"	2.0"	2.0"	2.0"	2.0"	2.0"	2.0"	2.0"
		75	6.0"	5.0"	5.0"	4.0"	4.0"	4.0"	3.0"	3.0"	3.0"	3.0"	3.0"	3.0"	2.0"	2.0"	2.0"	2.0"	2.0"	2.0"	2.0"	2.0"	2.0"	2.0"	2.0"	2.0"	2.0"	2.0"	
		80	5.0"	5.0"	4.0"	4.0"	4.0"	3.0"	3.0"	3.0"	3.0"	3.0"	3.0"	2.0"	2.0"	2.0"	2.0"	2.0"	2.0"	2.0"	2.0"	2.0"	2.0"	2.0"	2.0"	2.0"			
		85	5.0"	5.0"	4.0"	4.0"	3.0"	3.0"	3.0"	3.0"	3.0"	3.0"	2.0"	2.0"	2.0"	2.0"	2.0"	2.0"	2.0"	2.0"	2.0"	2.0"	2.0"	2.0"					
		90	5.0"	4.0"	4.0"	4.0"	3.0"	3.0"	3.0"	3.0"	3.0"	2.0"	2.0"	2.0"	2.0"	2.0"	2.0"	2.0"	2.0"	2.0"	2.0"	2.0"	2.0"						
		95	5.0"	4.0"	4.0"	3.0"	3.0"	3.0"	3.0"	3.0"	2.0"	2.0"	2.0"	2.0"	2.0"	2.0"	2.0"	2.0"	2.0"	2.0"	2.0"	2.0"							
		100	5.0"	4.0"	4.0"	3.0"	3.0"	3.0"	3.0"	2.0"	2.0"	2.0"	2.0"	2.0"	2.0"	2.0"	2.0"	2.0"	2.0"	2.0"	2.0"								
		105	4.0"	4.0"	3.0"	3.0"	3.0"	3.0"	3.0"	2.0"	2.0"	2.0"	2.0"	2.0"	2.0"	2.0"	2.0"	2.0"	2.0"	2.0"									
		110	4.0"	4.0"	3.0"	3.0"	3.0"	3.0"	2.0"	2.0"	2.0"	2.0"	2.0"	2.0"	2.0"	2.0"	2.0"	2.0"											
		115	4.0"	4.0"	3.0"	3.0"	3.0"	3.0"	2.0"	2.0"	2.0"	2.0"	2.0"	2.0"	2.0"	2.0"	2.0"												
		120	4.0"	3.0"	3.0"	3.0"	3.0"	2.0"	2.0"	2.0"	2.0"	2.0"	2.0"	2.0"	2.0"	2.0"													
		125	4.0"	3.0"	3.0"	3.0"	3.0"	2.0"	2.0"	2.0"	2.0"	2.0"	2.0"	2.0"	2.0"														
		130	4.0"	3.0"	3.0"	3.0"	2.0"	2.0"	2.0"	2.0"	2.0"	2.0"	2.0"	2.0"															
			2" MIN EDGE DISTANCE																										
	#14-10 PANELMATE PRO, PLUS, TVAS, FEMALE ID 1-5/8" EMBEDMENT (#2SYP w/ SG .54)	30	12.0"	12.0"	10.0"	10.0"	9.0"	8.0"	8.0"	7.0"	7.0"	7.0"	6.0"	6.0"	6.0"	6.0"	5.0"	5.0"	5.0"	5.0"	5.0"	5.0"	4.0"	4.0"	4.0"	4.0"	4.0"	4.0"	4.0"
		35	12.0"	10.0"	9.0"	9.0"	8.0"	7.0"	7.0"	7.0"	6.0"	6.0"	6.0"	5.0"	5.0"	5.0"	5.0"	5.0"	5.0"	4.0"	4.0"	4.0"	4.0"	4.0"	4.0"	4.0"	4.0"	3.0"	3.0"
		40	10.0"	9.0"	9.0"	8.0"	7.0"	7.0"	6.0"	6.0"	6.0"	5.0"	5.0"	5.0"	5.0"	5.0"	4.0"	4.0"	4.0"	4.0"	4.0"	4.0"	4.0"	3.0"	3.0"	3.0"	3.0"	3.0"	3.0"
		45	10.0"	9.0"	8.0"	7.0"	7.0"	6.0"	6.0"	6.0"	5.0"	5.0"	5.0"	5.0"	4.0"	4.0"	4.0"	4.0"	4.0"	4.0"	3.0"	3.0"	3.0"	3.0"	3.0"	3.0"	3.0"	3.0"	3.0"
		50	9.0"	8.0"	7.0"	7.0"	6.0"	6.0"	5.0"	5.0"	5.0"	5.0"	4.0"	4.0"	4.0"	4.0"	4.0"	4.0"	3.0"	3.0"	3.0"	3.0"	3.0"	3.0"	3.0"	3.0"	3.0"	3.0"	3.0"
		55	8.0"	7.0"	7.0"	6.0"	6.0"	5.0"	5.0"	5.0"	5.0"	4.0"	4.0"	4.0"	4.0"	4.0"	3.0"	3.0"	3.0"	3.0"	3.0"	3.0"	3.0"	3.0"	3.0"	2.0"	2.0"	2.0"	2.0"
		60	8.0"	7.0"	6.0"	6.0"	5.0"	5.0"	5.0"	4.0"	4.0"	4.0"	4.0"	4.0"	3.0"	3.0"	3.0"	3.0"	3.0"	3.0"	3.0"	3.0"	3.0"	3.0"	2.0"	2.0"	2.0"	2.0"	2.0"
		65	7.0"	7.0"	6.0"	6.0"	5.0"	5.0"	4.0"	4.0"	4.0"	4.0"	4.0"	3.0"	3.0"	3.0"	3.0"	3.0"	3.0"	3.0"	3.0"	3.0"	2.0"	2.0"	2.0"	2.0"	2.0"	2.0"	2.0"
		70	7.0"	6.0"	6.0"	5.0"	5.0"	5.0"	4.0"	4.0"	4.0"	4.0"	3.0"	3.0"	3.0"	3.0"	3.0"	3.0"	3.0"	3.0"	2.0"	2.0"	2.0"	2.0"	2.0"	2.0"	2.0"	2.0"	2.0"
		75	7.0"	6.0"	5.0"	5.0"	5.0"	4.0"	4.0"	4.0"	4.0"	3.0"	3.0"	3.0"	3.0"	3.0"	3.0"	3.0"	2.0"	2.0"	2.0"	2.0"	2.0"	2.0"	2.0"	2.0"	2.0"	2.0"	2.0"
		80	6.0"	6.0"	5.0"	5.0"	4.0"	4.0"	4.0"	4.0"	3.0"	3.0"	3.0"	3.0"	3.0"	3.0"	3.0"	2.0"	2.0"	2.0"	2.0"	2.0"	2.0"	2.0"	2.0"	2.0"	2.0"	2.0"	2.0"
		85	6.0"	5.0"	5.0"	5.0"	4.0"	4.0"	4.0"	3.0"	3.0"	3.0"	3.0"	3.0"	3.0"	3.0"	2.0"	2.0"	2.0"	2.0"	2.0"	2.0"	2.0"	2.0"	2.0"	2.0"	2.0"	2.0"	2.0"
		90	6.0"	5.0"	5.0"	4.0"	4.0"	4.0"	3.0"	3.0"	3.0"	3.0"	3.0"	3.0"	3.0"	2.0"	2.0"	2.0"	2.0"	2.0"	2.0"	2.0"	2.0"	2.0"	2.0"	2.0"	2.0"	2.0"	2.0"
		95	6.0"	5.0"	5.0"	4.0"	4.0"	4.0"	3.0"	3.0"	3.0"	3.0"	3.0"	3.0"	2.0"	2.0"	2.0"	2.0"	2.0"	2.0"	2.0"	2.0"	2.0"	2.0"	2.0"	2.0"	2.0"	2.0"	
		100	5.0"	5.0"	4.0"	4.0"	4.0"	3.0"	3.0"	3.0"	3.0"	3.0"	3.0"	2.0"	2.0"	2.0"	2.0"	2.0"	2.0"	2.0"	2.0"	2.0"	2.0"	2.0"	2.0"				
		105	5.0"	5.0"	4.0"	4.0"	4.0"	3.0"	3.0"	3.0"	3.0"	3.0"	2.0"	2.0"	2.0"	2.0"	2.0"	2.0"	2.0"	2.0"	2.0"	2.0"	2.0"	2.0"					
		110	5.0"	5.0"	4.0"	4.0"	3.0"	3.0"	3.0"	3.0"	3.0"	2.0"	2.0"	2.0"	2.0"	2.0"	2.0"	2.0"	2.0"	2.0"	2.0"	2.0"	2.0"						
		115	5.0"	4.0"	4.0"	4.0"	3.0"	3.0"	3.0"	3.0"	3.0"	2.0"	2.0"	2.0"	2.0"	2.0"	2.0"	2.0"	2.0"	2.0"	2.0"	2.0"							
		120	5.0"	4.0"	4.0"	3.0"	3.0"	3.0"	3.0"	3.0"	2.0"	2.0"	2.0"	2.0"	2.0"	2.0"	2.0"	2.0"	2.0"	2.0"	2.0"								
		125	5.0"	4.0"	4.0"	3.0"	3.0"	3.0"	3.0"	3.0"	2.0"	2.0"	2.0"	2.0"	2.0"	2.0"	2.0"	2.0"	2.0"	2.0"									
		130	4.0"	4.0"	4.0"	3.0"	3.0"	3.0"	3.0"	2.0"	2.0"	2.0"	2.0"	2.0"	2.0"	2.0"	2.0"	2.0"	2.0"										

HOST STRUCT.	ANCHOR TYPE	LOAD (psf)	SPANS 16' ≤ 16'-6"	SPANS 16'-7" ≤ 17'	SPANS 17' ≤ 17'-6"	SPANS 17'-7" ≤ 18'	SPANS 18' ≤ 18'-6"	SPANS 18'-7" ≤ 19'	SPANS 19' ≤ 19'-6"	SPANS 19'-7" ≤ 20'	SPANS 20' ≤ 20'-6"	SPANS 20'-7" ≤ 21'	SPANS 21' ≤ 21'-6"	SPANS 21'-7" ≤ 22'	SPANS 22' ≤ 22'-6"	SPANS 22'-7" ≤ 23'	SPANS 23' ≤ 23'-6"	SPANS 23'-7" ≤ 24'	SPANS 24' ≤ 24'-6"	SPANS 24'-7" ≤ 25'	SPANS 25' ≤ 25'-6"	SPANS 25'-7" ≤ 26'	SPANS 26' ≤ 26'-6"	SPANS 26'-7" ≤ 27'	SPANS 27' ≤ 27'-6"	SPANS 27'-7" ≤ 28'	SPANS 28' ≤ 28'-6"	SPANS 28'-7" ≤ 29'	SPANS 29' ≤ 29'-6"	SPANS 29'-7" ≤ 30'
			2" MIN EDGE DISTANCE																										
WOOD	1/4" PANELMATE INSERT 1-5/8" EMBEDMENT (#2SYP w/ SG .55)	30	3.0"	3.0"	3.0"	3.0"	3.0"	3.0"	3.0"	3.0"	3.0"	3.0"	2.0"	2.0"	2.0"	2.0"	2.0"	2.0"	2.0"	2.0"	2.0"	2.0"	2.0"	2.0"	2.0"	2.0"	2.0"	2.0"	
		35	3.0"	3.0"	3.0"	3.0"	2.0"	2.0"	2.0"	2.0"	2.0"	2.0"	2.0"	2.0"	2.0"	2.0"	2.0"	2.0"	2.0"	2.0"	2.0"	2.0"	2.0"	2.0"	2.0"				
		40	2.0"	2.0"	2.0"	2.0"	2.0"	2.0"	2.0"	2.0"	2.0"	2.0"	2.0"	2.0"	2.0"	2.0"	2.0"	2.0"	2.0"	2.0"	2.0"	2.0"	2.0"						
		45	2.0"	2.0"	2.0"	2.0"	2.0"	2.0"	2.0"	2.0"	2.0"	2.0"	2.0"	2.0"	2.0"	2.0"	2.0"	2.0"	2.0"	2.0"	2.0"								
		50	2.0"	2.0"	2.0"	2.0"	2.0"	2.0"	2.0"	2.0"	2.0"	2.0"	2.0"	2.0"	2.0"	2.0"													
		55	2.0"	2.0"	2.0"	2.0"	2.0"	2.0"	2.0"	2.0"	2.0"	2.0"																	
		60	2.0"	2.0"	2.0"	2.0"	2.0"	2.0"																					
			2" MIN EDGE DISTANCE																										
	#14-10 PANELMATE PRO, PLUS, TVAS, FEMALE ID 1-5/8" EMBEDMENT (#2SYP w/ SG .54)	30	4.0"	4.0"	4.0"	3.0"	3.0"	3.0"	3.0"	3.0"	3.0"	3.0"	3.0"	3.0"	3.0"	3.0"	3.0"	3.0"	3.0"	3.0"	2.0"	2.0"	2.0"	2.0"	2.0"	2.0"	2.0"	2.0"	
		35	3.0"	3.0"	3.0"	3.0"	3.0"	3.0"	3.0"	3.0"	3.0"	3.0"	3.0"	3.0"	3.0"	3.0"	2.0"	2.0"	2.0"	2.0"	2.0"	2.0"	2.0"	2.0"	2.0"	2.0"	2.0"		
		40	3.0"	3.0"	3.0"	3.0"	3.0"	3.0"	3.0"	3.0"	2.0"	2.0"	2.0"	2.0"	2.0"	2.0"	2.0"	2.0"	2.0"	2.0"	2.0"	2.0"	2.0"	2.0"	2.0"				
		45	3.0"	3.0"	3.0"	3.0"	2.0"	2.0"	2.0"	2.0"	2.0"	2.0"	2.0"	2.0"	2.0"	2.0"	2.0"	2.0"	2.0"	2.0"	2.0"	2.0"	2.0"	2.0"					
		50	2.0"	2.0"	2.0"	2.0"	2.0"	2.0"	2.0"	2.0"	2.0"	2.0"	2.0"	2.0"	2.0"	2.0"	2.0"	2.0"	2.0"	2.0"	2.0"	2.0"							
		55	2.0"	2.0"	2.0"	2.0"	2.0"	2.0"	2.0"	2.0"	2.0"	2.0"	2.0"	2.0"	2.0"	2.0"	2.0"	2.0"	2.0"	2.0"	2.0"								
		60	2.0"	2.0"	2.0"	2.0"	2.0"	2.0"	2.0"	2.0"	2.0"	2.0"	2.0"	2.0"	2.0"	2.0"	2.0"	2.0"	2.0"										

NOTES:

1. APPROVED FOR USE ATTACHING GROMMET SCREENS & ALL TRACKS OR STUDDED ANGLE WITH ¼" SIDEWALK BOLT

FRANK L. BENNARDO, P.E.
PE# 0046549
10/20/2017
☐ CONSULTING ENGINEERING P.E. APPEARS BELOW
FRANK L. BENNARDO, P.E.
46549
FRANK L. BENNARDO LICENSE No PE0046549 STATE OF FLORIDA PROFESSIONAL ENGINEER

ENGINEERING EXPRESS®
CORPORATE OFFICE:
160 SW 12th AVE, SUITE 106
DEERFIELD BEACH, FL 33442
P: (954) 354-0660 F: (954) 354-0443
E: HELLO@ENGINEERINGEXPRESS.COM
ENGINEERINGEXPRESS.COM
CERT OF AUTH #9885

STORM SMART INDUSTRIES, INC.
6182 IDLEWILD STREET
FORT MYERS , FL
(239) 938-1000

STORM CATCHER WIND ABATEMENT SYSTEM FL11291.2 HVHZ
-
-, FL

REMARKS	DRWN	CHKD	DATE
INIT ISSUE	RWN	FLB	10/18/17

THIS DOCUMENT IS THE PROPERTY OF ENGINEERING EXPRESS, AND SHALL NOT BE REPRODUCED IN WHOLE OR PART WITHOUT WRITTEN CONSENT OF ENGINEERING EXPRESS. ALTERATIONS, ADDITIONS, OR OTHER MARKINGS TO THIS DOCUMENT ARE NOT PERMITTED AND INVALIDATE OUR CERTIFICATION.

COPYRIGHT ENGINEERING EXPRESS ®

16-3080

SCALE: NTS UNLESS NOTED

10/20/2017 - 3:08pm zachr V:\Projects\16-3080 Storm Catcher Wind Abatement System FL11291-R4\WP\2017 FBC Update\16-3080e-Dwg-11291.2.dwg

TABLE 22 - WOOD

$\frac{3}{8}$" & $\frac{1}{2}$" LAG BOLT

HOST STRUCT.	ANCHOR TYPE	LOAD (psf)	SPANS 0" ≤ 3'	SPANS 3' ≤ 3'-6"	SPANS 3'-7" ≤ 4'	SPANS 4' ≤ 3'-6"	SPANS 4'-7" ≤ 5'	SPANS 5' ≤ 5'-6"	SPANS 5'-7" ≤ 6'	SPANS 6' ≤ 6'-6"	SPANS 6'-7" ≤ 7'	SPANS 7' ≤ 7'-6"	SPANS 7'-7" ≤ 8'	SPANS 8' ≤ 8'-6"	SPANS 8'-7" ≤ 9'	SPANS 9' ≤ 9'-6"	SPANS 9'-7" ≤ 10'	SPANS 10' ≤ 10'-6"	SPANS 10'-7" ≤ 11'	SPANS 11' ≤ 11'-6"	SPANS 11'-7" ≤ 12'	SPANS 12' ≤ 12'-6"	SPANS 12'-7" ≤ 13'	SPANS 13' ≤ 13'-6"	SPANS 13'-7" ≤ 14'	SPANS 14' ≤ 14'-6"	SPANS 14'-7" ≤ 15'	SPANS 15' ≤ 15'-6"	SPANS 15'-7" ≤ 16'
			2 1/2" MIN EDGE DISTANCE																										
WOOD	3/8" LAG BOLT OR ALL POINTS COMBO WITH MIN. 2-1/2" THREAD PENETRATION	30	11.0"	10.0"	9.0"	9.0"	8.0"	7.0"	7.0"	6.0"	6.0"	6.0"	6.0"	5.0"	5.0"	5.0"	5.0"	5.0"	4.0"	4.0"	4.0"	4.0"	4.0"	4.0"	4.0"	4.0"	3.0"	3.0"	3.0"
		35	10.0"	9.0"	8.0"	8.0"	7.0"	7.0"	6.0"	6.0"	5.0"	5.0"	5.0"	5.0"	5.0"	4.0"	4.0"	4.0"	4.0"	4.0"	4.0"	4.0"	3.0"	3.0"	3.0"	3.0"	3.0"	3.0"	3.0"
		40	9.0"	8.0"	8.0"	7.0"	6.0"	6.0"	6.0"	5.0"	5.0"	5.0"	4.0"	4.0"	4.0"	4.0"	4.0"	4.0"	3.0"	3.0"	3.0"	3.0"	3.0"	3.0"	3.0"	3.0"	3.0"	3.0"	3.0"
		45	9.0"	8.0"	7.0"	6.0"	6.0"	5.0"	5.0"	5.0"	5.0"	4.0"	4.0"	4.0"	4.0"	4.0"	3.0"	3.0"	3.0"	3.0"	3.0"	3.0"	3.0"	3.0"	3.0"	2.0"	2.0"	2.0"	2.0"
		50	8.0"	7.0"	6.0"	6.0"	5.0"	5.0"	5.0"	4.0"	4.0"	4.0"	4.0"	4.0"	3.0"	3.0"	3.0"	3.0"	3.0"	3.0"	3.0"	3.0"	3.0"	2.0"	2.0"	2.0"	2.0"	2.0"	2.0"
		55	7.0"	7.0"	6.0"	5.0"	5.0"	5.0"	4.0"	4.0"	4.0"	4.0"	3.0"	3.0"	3.0"	3.0"	3.0"	3.0"	3.0"	3.0"	3.0"	2.0"	2.0"	2.0"	2.0"	2.0"	2.0"	2.0"	2.0"
		60	7.0"	6.0"	6.0"	5.0"	5.0"	4.0"	4.0"	4.0"	4.0"	3.0"	3.0"	3.0"	3.0"	3.0"	3.0"	3.0"	3.0"	2.0"	2.0"	2.0"	2.0"	2.0"	2.0"	2.0"	2.0"	2.0"	2.0"
		65	6.0"	6.0"	5.0"	5.0"	4.0"	4.0"	4.0"	4.0"	3.0"	3.0"	3.0"	3.0"	3.0"	3.0"	3.0"	2.0"	2.0"	2.0"	2.0"	2.0"	2.0"	2.0"	2.0"	2.0"	2.0"	2.0"	2.0"
		70	6.0"	5.0"	5.0"	5.0"	4.0"	4.0"	4.0"	3.0"	3.0"	3.0"	3.0"	3.0"	3.0"	2.0"	2.0"	2.0"	2.0"	2.0"	2.0"	2.0"	2.0"	2.0"	2.0"	2.0"	2.0"	2.0"	2.0"
		75	6.0"	5.0"	5.0"	4.0"	4.0"	4.0"	3.0"	3.0"	3.0"	3.0"	3.0"	3.0"	2.0"	2.0"	2.0"	2.0"	2.0"	2.0"	2.0"	2.0"	2.0"	2.0"	2.0"	2.0"	2.0"	2.0"	N/A
		80	6.0"	5.0"	4.0"	4.0"	4.0"	3.0"	3.0"	3.0"	3.0"	3.0"	3.0"	2.0"	2.0"	2.0"	2.0"	2.0"	2.0"	2.0"	2.0"	2.0"	2.0"	2.0"	2.0"	2.0"	N/A	N/A	N/A
		85	5.0"	5.0"	4.0"	4.0"	4.0"	3.0"	3.0"	3.0"	3.0"	3.0"	2.0"	2.0"	2.0"	2.0"	2.0"	2.0"	2.0"	2.0"	2.0"	2.0"	2.0"	2.0"	N/A	N/A	N/A	N/A	N/A
		90	5.0"	5.0"	4.0"	4.0"	3.0"	3.0"	3.0"	3.0"	3.0"	2.0"	2.0"	2.0"	2.0"	2.0"	2.0"	2.0"	2.0"	2.0"	2.0"	2.0"	2.0"	N/A	N/A	N/A	N/A	N/A	N/A
		95	5.0"	4.0"	4.0"	4.0"	3.0"	3.0"	3.0"	3.0"	2.0"	2.0"	2.0"	2.0"	2.0"	2.0"	2.0"	2.0"	2.0"	2.0"	2.0"	N/A	N/A	N/A	N/A	N/A	N/A	N/A	N/A
		100	5.0"	4.0"	4.0"	3.0"	3.0"	3.0"	3.0"	3.0"	2.0"	2.0"	2.0"	2.0"	2.0"	2.0"	2.0"	2.0"	2.0"	2.0"	N/A	N/A	N/A	N/A	N/A	N/A	N/A	N/A	N/A
		105	5.0"	4.0"	4.0"	3.0"	3.0"	3.0"	3.0"	2.0"	2.0"	2.0"	2.0"	2.0"	2.0"	2.0"	2.0"	2.0"	2.0"	N/A	N/A	N/A	N/A	N/A	N/A	N/A	N/A	N/A	N/A
		110	4.0"	4.0"	3.0"	3.0"	3.0"	3.0"	3.0"	2.0"	2.0"	2.0"	2.0"	2.0"	2.0"	2.0"	2.0"	2.0"	N/A	N/A	N/A	N/A	N/A	N/A	N/A	N/A	N/A	N/A	N/A
		115	4.0"	4.0"	3.0"	3.0"	3.0"	3.0"	2.0"	2.0"	2.0"	2.0"	2.0"	2.0"	2.0"	2.0"	2.0"	N/A	N/A	N/A	N/A	N/A	N/A	N/A	N/A	N/A	N/A	N/A	N/A
		120	4.0"	4.0"	3.0"	3.0"	3.0"	3.0"	2.0"	2.0"	2.0"	2.0"	2.0"	2.0"	2.0"	2.0"	N/A	N/A	N/A	N/A	N/A	N/A	N/A	N/A	N/A	N/A	N/A	N/A	N/A
		125	4.0"	4.0"	3.0"	3.0"	3.0"	2.0"	2.0"	2.0"	2.0"	2.0"	2.0"	2.0"	2.0"	N/A	N/A	N/A	N/A	N/A	N/A	N/A	N/A	N/A	N/A	N/A	N/A	N/A	N/A
		130	4.0"	3.0"	3.0"	3.0"	3.0"	2.0"	2.0"	2.0"	2.0"	2.0"	2.0"	2.0"	2.0"	N/A	N/A	N/A	N/A	N/A	N/A	N/A	N/A	N/A	N/A	N/A	N/A	N/A	N/A
			2 1/2" MIN EDGE DISTANCE																										
	1/2" LAG BOLT OR ALL POINTS COMBO WITH MIN. 2-1/2" THREAD PENETRATION	30	12.0"	12.0"	12.0"	12.0"	12.0"	12.0"	12.0"	12.0"	11.0"	11.0"	10.0"	10.0"	10.0"	9.0"	9.0"	9.0"	8.0"	8.0"	8.0"	7.0"	7.0"	7.0"	7.0"	7.0"	7.0"	6.0"	6.0"
		35	12.0"	12.0"	12.0"	12.0"	12.0"	12.0"	11.0"	11.0"	10.0"	10.0"	9.0"	9.0"	9.0"	8.0"	8.0"	8.0"	7.0"	7.0"	7.0"	7.0"	6.0"	6.0"	6.0"	6.0"	6.0"	6.0"	6.0"
		40	12.0"	12.0"	12.0"	12.0"	12.0"	11.0"	10.0"	10.0"	9.0"	9.0"	8.0"	8.0"	8.0"	7.0"	7.0"	7.0"	7.0"	6.0"	6.0"	6.0"	6.0"	6.0"	6.0"	5.0"	5.0"	5.0"	5.0"
		45	12.0"	12.0"	12.0"	12.0"	11.0"	10.0"	10.0"	9.0"	9.0"	8.0"	8.0"	7.0"	7.0"	7.0"	7.0"	6.0"	6.0"	6.0"	6.0"	6.0"	5.0"	5.0"	5.0"	5.0"	5.0"	5.0"	5.0"
		50	12.0"	12.0"	12.0"	11.0"	10.0"	9.0"	9.0"	8.0"	8.0"	7.0"	7.0"	7.0"	7.0"	6.0"	6.0"	6.0"	6.0"	6.0"	5.0"	5.0"	5.0"	5.0"	5.0"	5.0"	4.0"	4.0"	4.0"
		55	12.0"	12.0"	11.0"	10.0"	9.0"	9.0"	8.0"	8.0"	7.0"	7.0"	7.0"	6.0"	6.0"	6.0"	6.0"	5.0"	5.0"	5.0"	5.0"	5.0"	5.0"	4.0"	4.0"	4.0"	4.0"	4.0"	4.0"
		60	12.0"	11.0"	10.0"	10.0"	9.0"	8.0"	8.0"	7.0"	7.0"	7.0"	6.0"	6.0"	6.0"	5.0"	5.0"	5.0"	5.0"	5.0"	5.0"	4.0"	4.0"	4.0"	4.0"	4.0"	4.0"	4.0"	4.0"
		65	12.0"	11.0"	10.0"	9.0"	8.0"	8.0"	7.0"	7.0"	6.0"	6.0"	6.0"	6.0"	5.0"	5.0"	5.0"	5.0"	5.0"	4.0"	4.0"	4.0"	4.0"	4.0"	4.0"	4.0"	4.0"	4.0"	3.0"
		70	11.0"	10.0"	9.0"	9.0"	8.0"	7.0"	7.0"	6.0"	6.0"	6.0"	6.0"	5.0"	5.0"	5.0"	5.0"	5.0"	4.0"	4.0"	4.0"	4.0"	4.0"	4.0"	4.0"	3.0"	3.0"	3.0"	3.0"
		75	11.0"	10.0"	9.0"	8.0"	7.0"	7.0"	7.0"	6.0"	6.0"	6.0"	5.0"	5.0"	5.0"	5.0"	4.0"	4.0"	4.0"	4.0"	4.0"	4.0"	4.0"	3.0"	3.0"	3.0"	3.0"	3.0"	3.0"
		80	10.0"	9.0"	8.0"	8.0"	7.0"	7.0"	6.0"	6.0"	6.0"	5.0"	5.0"	5.0"	5.0"	4.0"	4.0"	4.0"	4.0"	4.0"	4.0"	4.0"	3.0"	3.0"	3.0"	3.0"	3.0"	3.0"	3.0"
		85	10.0"	9.0"	8.0"	7.0"	7.0"	6.0"	6.0"	6.0"	5.0"	5.0"	5.0"	5.0"	4.0"	4.0"	4.0"	4.0"	4.0"	4.0"	3.0"	3.0"	3.0"	3.0"	3.0"	3.0"	3.0"	3.0"	3.0"
		90	10.0"	9.0"	8.0"	7.0"	7.0"	6.0"	6.0"	5.0"	5.0"	5.0"	5.0"	4.0"	4.0"	4.0"	4.0"	4.0"	4.0"	3.0"	3.0"	3.0"	3.0"	3.0"	3.0"	3.0"	3.0"	3.0"	3.0"
		95	9.0"	8.0"	7.0"	7.0"	6.0"	6.0"	5.0"	5.0"	5.0"	5.0"	4.0"	4.0"	4.0"	4.0"	4.0"	4.0"	3.0"	3.0"	3.0"	3.0"	3.0"	3.0"	3.0"	3.0"	3.0"	3.0"	2.0"
		100	9.0"	8.0"	7.0"	7.0"	6.0"	6.0"	5.0"	5.0"	5.0"	4.0"	4.0"	4.0"	4.0"	4.0"	4.0"	3.0"	3.0"	3.0"	3.0"	3.0"	3.0"	3.0"	3.0"	3.0"	3.0"	3.0"	2.0"
		105	9.0"	8.0"	7.0"	6.0"	6.0"	5.0"	5.0"	5.0"	5.0"	4.0"	4.0"	4.0"	4.0"	4.0"	3.0"	3.0"	3.0"	3.0"	3.0"	3.0"	3.0"	3.0"	3.0"	2.0"	2.0"	2.0"	2.0"
		110	8.0"	7.0"	7.0"	6.0"	6.0"	5.0"	5.0"	5.0"	4.0"	4.0"	4.0"	4.0"	4.0"	3.0"	3.0"	3.0"	3.0"	3.0"	3.0"	3.0"	3.0"	3.0"	2.0"	2.0"	2.0"	2.0"	2.0"
		115	8.0"	7.0"	6.0"	6.0"	5.0"	5.0"	5.0"	4.0"	4.0"	4.0"	4.0"	4.0"	3.0"	3.0"	3.0"	3.0"	3.0"	3.0"	3.0"	3.0"	3.0"	2.0"	2.0"	2.0"	2.0"	2.0"	2.0"
		120	8.0"	7.0"	6.0"	6.0"	5.0"	5.0"	5.0"	4.0"	4.0"	4.0"	4.0"	3.0"	3.0"	3.0"	3.0"	3.0"	3.0"	3.0"	3.0"	3.0"	2.0"	2.0"	2.0"	2.0"	2.0"	2.0"	2.0"
		125	7.0"	7.0"	6.0"	6.0"	5.0"	5.0"	4.0"	4.0"	4.0"	4.0"	4.0"	3.0"	3.0"	3.0"	3.0"	3.0"	3.0"	3.0"	3.0"	3.0"	2.0"	2.0"	2.0"	2.0"	2.0"	2.0"	2.0"
		130	7.0"	6.0"	6.0"	5.0"	5.0"	5.0"	4.0"	4.0"	4.0"	4.0"	3.0"	3.0"	3.0"	3.0"	3.0"	3.0"	3.0"	3.0"	3.0"	3.0"	2.0"	2.0"	2.0"	2.0"	2.0"	2.0"	2.0"

HOST STRUCT.	ANCHOR TYPE	SPANS 16' ≤ 16'-6"	SPANS 16'-7" ≤ 17'	SPANS 17' ≤ 17'-6"	SPANS 17'-7" ≤ 18'	SPANS 18' ≤ 18'-6"	SPANS 18'-7" ≤ 19'	SPANS 19' ≤ 19'-6"	SPANS 19'-7" ≤ 20'	SPANS 20' ≤ 20'-6"	SPANS 20'-7" ≤ 21'	SPANS 21' ≤ 21'-6"	SPANS 21'-7" ≤ 22'	SPANS 22' ≤ 22'-6"	SPANS 22'-7" ≤ 23'	SPANS 23' ≤ 23'-6"	SPANS 23'-7" ≤ 24'	SPANS 24' ≤ 24'-6"	SPANS 24'-7" ≤ 25'	SPANS 25' ≤ 25'-6"	SPANS 25'-7" ≤ 26'	SPANS 26' ≤ 26'-6"	SPANS 26'-7" ≤ 27'	SPANS 27' ≤ 27'-6"	SPANS 27'-7" ≤ 28'	SPANS 28' ≤ 28'-6"	SPANS 28'-7" ≤ 29'	SPANS 29' ≤ 29'-6"	SPANS 29'-7" ≤ 30'
		2 1/2" MIN EDGE DISTANCE																										
WOOD	3/8" LAG BOLT OR ALL POINTS COMBO WITH MIN. 2-1/2" THREAD PENETRATION	3.0"	3.0"	3.0"	3.0"	3.0"	3.0"	3.0"	3.0"	3.0"	3.0"	3.0"	3.0"	2.0"	2.0"	2.0"	2.0"	2.0"	2.0"	2.0"	2.0"	2.0"	2.0"	2.0"	2.0"	2.0"	2.0"	2.0"
		3.0"	3.0"	3.0"	3.0"	3.0"	2.0"	2.0"	2.0"	2.0"	2.0"	2.0"	2.0"	2.0"	2.0"	2.0"	2.0"	2.0"	2.0"	2.0"	2.0"	2.0"	2.0"	2.0"	2.0"	2.0"		
		3.0"	2.0"	2.0"	2.0"	2.0"	2.0"	2.0"	2.0"	2.0"	2.0"	2.0"	2.0"	2.0"	2.0"	2.0"	2.0"	2.0"	2.0"	2.0"	2.0"	2.0"	2.0"					
		2.0"	2.0"	2.0"	2.0"	2.0"	2.0"	2.0"	2.0"	2.0"	2.0"	2.0"	2.0"	2.0"	2.0"	2.0"	2.0"	2.0"	2.0"	2.0"	2.0"	2.0"						
		2.0"	2.0"	2.0"	2.0"	2.0"	2.0"	2.0"	2.0"	2.0"	2.0"	2.0"	2.0"	2.0"	2.0"	2.0"	2.0"	2.0"	2.0"	2.0"	2.0"							
		2.0"	2.0"	2.0"	2.0"	2.0"	2.0"	2.0"	2.0"	2.0"	2.0"	2.0"	2.0"	2.0"	2.0"	2.0"	2.0"	2.0"	2.0"	2.0"								
		2.0"	2.0"	2.0"	2.0"	2.0"	2.0"	2.0"	2.0"	2.0"	2.0"	2.0"	2.0"	2.0"	2.0"	2.0"	2.0"	2.0"	2.0"									
		2 1/2" MIN EDGE DISTANCE																										
	1/2" LAG BOLT OR ALL POINTS COMBO WITH MIN. 2-1/2" THREAD PENETRATION	6.0"	6.0"	6.0"	6.0"	6.0"	5.0"	5.0"	5.0"	5.0"	5.0"	5.0"	5.0"	5.0"	5.0"	5.0"	5.0"	4.0"	4.0"	4.0"	4.0"	4.0"	3.0"	3.0"	3.0"	2.0"	2.0"	2.0"
		5.0"	5.0"	5.0"	5.0"	5.0"	5.0"	5.0"	5.0"	5.0"	4.0"	4.0"	4.0"	4.0"	4.0"	4.0"	4.0"	4.0"	4.0"	4.0"	3.0"	3.0"	3.0"	3.0"	2.0"	2.0"	2.0"	2.0"
		5.0"	5.0"	5.0"	5.0"	4.0"	4.0"	4.0"	4.0"	4.0"	4.0"	4.0"	4.0"	4.0"	4.0"	4.0"	4.0"	4.0"	4.0"	3.0"	3.0"	3.0"	3.0"	3.0"	2.0"	2.0"	2.0"	2.0"
		4.0"	4.0"	4.0"	4.0"	4.0"	4.0"	4.0"	4.0"	4.0"	4.0"	4.0"	4.0"	3.0"	3.0"	3.0"	3.0"	3.0"	3.0"	3.0"	3.0"	3.0"	2.0"	2.0"	2.0"	2.0"	2.0"	
		4.0"	4.0"	4.0"	4.0"	4.0"	4.0"	4.0"	4.0"	3.0"	3.0"	3.0"	3.0"	3.0"	3.0"	3.0"	3.0"	3.0"	3.0"	3.0"	3.0"	3.0"	2.0"	2.0"	2.0"			
		4.0"	4.0"	4.0"	4.0"	3.0"	3.0"	3.0"	3.0"	3.0"	3.0"	3.0"	3.0"	3.0"	3.0"	3.0"	3.0"	3.0"	3.0"	3.0"	3.0"	2.0"	2.0"	2.0"				
		4.0"	3.0"	3.0"	3.0"	3.0"	3.0"	3.0"	3.0"	3.0"	3.0"	3.0"	3.0"	3.0"	3.0"	3.0"	3.0"	3.0"	3.0"	2.0"	2.0"	2.0"						

NOTES:

1. APPROVED FOR USE WITH ALL TRACKS
2. COMBO BOLTS ARE APPROVED FOR USE WITH ⅜" & ½" EYEBOLTS

FRANK L. BENNARDO, P.E.
PE# 0046549

10/20/2017

FRANK L. BENNARDO, P.E.
46949

ENGINEERING EXPRESS®
CORPORATE OFFICE:
160 SW 12th AVE, SUITE 106
DEERFIELD BEACH, FL 33442
P: (954) 354-0660 F: (954) 354-0443
E: HELLO@ENGINEERINGEXPRESS.COM
ENGINEERINGEXPRESS.COM
CERT OF AUTH #9885

STORM SMART INDUSTRIES, INC.
6182 IDLEWILD STREET
FORT MYERS , FL
(239) 938-1000

STORM CATCHER WIND ABATEMENT SYSTEM FL11291.2 HVHZ
-
-, FL

REMARKS	DRWN	CHKD	DATE
INIT ISSUE	RWN	FLB	10/18/17

THIS DOCUMENT IS THE PROPERTY OF ENGINEERING EXPRESS, AND SHALL NOT BE REPRODUCED IN WHOLE OR PART WITHOUT WRITTEN CONSENT OF ENGINEERING EXPRESS. ALTERATIONS, ADDITIONS, OR OTHER MARKINGS TO THIS DOCUMENT ARE NOT PERMITTED AND INVALIDATE OUR CERTIFICATION.

COPYRIGHT ENGINEERING EXPRESS ®

16-3080

SCALE: NTS UNLESS NOTED

V:\Projects\16-3080 Storm Catcher Wind Abatement System FL11291-R4\WP\2017 FBC Update\16-3080e-Dwg-112912.dwg
10/20/2017 - 3:08pm zachr

TABLE 23 - WOOD

$\frac{5}{16}$" & $\frac{1}{4}$" ULTACONS STRAP BRACKET SPACING

HOST STRUCT.	ANCHOR TYPE		3/4" MIN EDGE DISTANCE																									
			SPANS 0" ≤ 3'	SPANS 3' ≤ 3'-6"	SPANS 3'-7" ≤ 4'	SPANS 4' ≤ 4'-6"	SPANS 4'-7" ≤ 5'	SPANS 5' ≤ 5'-6"	SPANS 5'-7" ≤ 6'	SPANS 6' ≤ 6'-6"	SPANS 6'-7" ≤ 7'	SPANS 7' ≤ 7'-6"	SPANS 7'-7" ≤ 8'	SPANS 8' ≤ 8'-6"	SPANS 8'-7" ≤ 9'	SPANS 9' ≤ 9'-6"	SPANS 9'-7" ≤ 10'	SPANS 10' ≤ 10'-6"	SPANS 10'-7" ≤ 11'	SPANS 11' ≤ 11'-6"	SPANS 11'-7" ≤ 12'	SPANS 12' ≤ 12'-6"	SPANS 12'-7" ≤ 13'	SPANS 13' ≤ 13'-6"	SPANS 13'-7" ≤ 14'	SPANS 14' ≤ 14'-6"	SPANS 14'-7" ≤ 15'	SPANS 15' ≤ 15'-6"	SPANS 15'-7" ≤ 16'
WOOD	5/16" ELCO ULTRACON HFH 1-1/2" THREAD PENETRATION	30	18.0"	18.0"	18.0"	17.0"	15.0"	15.0"	14.0"	13.0"	12.0"	12.0"	11.0"	11.0"	10.0"	10.0"	10.0"	9.0"	9.0"	9.0"	8.0"	8.0"	8.0"	8.0"	7.0"	7.0"	7.0"	7.0"	7.0"
		35	18.0"	18.0"	16.0"	15.0"	14.0"	13.0"	12.0"	12.0"	11.0"	10.0"	10.0"	10.0"	9.0"	9.0"	9.0"	8.0"	8.0"	8.0"	7.0"	7.0"	7.0"	7.0"	7.0"	7.0"	6.0"	6.0"	6.0"
		40	18.0"	16.0"	15.0"	14.0"	13.0"	12.0"	11.0"	11.0"	10.0"	10.0"	9.0"	9.0"	8.0"	8.0"	8.0"	7.0"	7.0"	7.0"	7.0"	7.0"	6.0"	6.0"	6.0"	6.0"	6.0"	6.0"	6.0"
		45	17.0"	15.0"	14.0"	13.0"	12.0"	11.0"	10.0"	10.0"	9.0"	9.0"	8.0"	8.0"	8.0"	7.0"	7.0"	7.0"	7.0"	6.0"	6.0"	6.0"	6.0"	6.0"	6.0"	5.0"	5.0"	5.0"	5.0"
		50	15.0"	14.0"	13.0"	12.0"	11.0"	10.0"	10.0"	9.0"	9.0"	8.0"	8.0"	7.0"	7.0"	7.0"	7.0"	6.0"	6.0"	6.0"	6.0"	6.0"	5.0"	5.0"	5.0"	5.0"	5.0"	5.0"	5.0"
		55	15.0"	13.0"	12.0"	11.0"	10.0"	9.0"	9.0"	8.0"	8.0"	8.0"	7.0"	7.0"	7.0"	6.0"	6.0"	6.0"	6.0"	6.0"	5.0"	5.0"	5.0"	5.0"	5.0"	5.0"	5.0"	4.0"	4.0"
		60	14.0"	12.0"	11.0"	10.0"	10.0"	9.0"	8.0"	8.0"	7.0"	7.0"	7.0"	7.0"	6.0"	6.0"	6.0"	6.0"	5.0"	5.0"	5.0"	5.0"	5.0"	5.0"	5.0"	4.0"	4.0"	4.0"	4.0"
		65	13.0"	12.0"	11.0"	10.0"	9.0"	8.0"	8.0"	7.0"	7.0"	7.0"	6.0"	6.0"	6.0"	6.0"	5.0"	5.0"	5.0"	5.0"	5.0"	5.0"	4.0"	4.0"	4.0"	4.0"	4.0"	4.0"	4.0"
		70	12.0"	11.0"	10.0"	9.0"	9.0"	8.0"	7.0"	7.0"	7.0"	6.0"	6.0"	6.0"	6.0"	5.0"	5.0"	5.0"	5.0"	5.0"	5.0"	4.0"	4.0"	4.0"	4.0"	4.0"	4.0"	4.0"	4.0"
		75	12.0"	10.0"	10.0"	9.0"	8.0"	8.0"	7.0"	7.0"	6.0"	6.0"	6.0"	6.0"	5.0"	5.0"	5.0"	5.0"	5.0"	4.0"	4.0"	4.0"	4.0"	4.0"	4.0"	4.0"	4.0"	4.0"	N/A
		80	11.0"	10.0"	9.0"	8.0"	8.0"	7.0"	7.0"	6.0"	6.0"	6.0"	6.0"	5.0"	5.0"	5.0"	5.0"	5.0"	4.0"	4.0"	4.0"	4.0"	4.0"	4.0"	4.0"	4.0"	N/A	N/A	N/A
		85	11.0"	10.0"	9.0"	8.0"	7.0"	7.0"	7.0"	6.0"	6.0"	6.0"	5.0"	5.0"	5.0"	5.0"	4.0"	4.0"	4.0"	4.0"	4.0"	4.0"	4.0"	4.0"	N/A	N/A	N/A	N/A	N/A
		90	10.0"	9.0"	8.0"	8.0"	7.0"	7.0"	6.0"	6.0"	6.0"	5.0"	5.0"	5.0"	5.0"	4.0"	4.0"	4.0"	4.0"	4.0"	4.0"	4.0"	N/A	N/A	N/A	N/A	N/A	N/A	N/A
		95	10.0"	9.0"	8.0"	7.0"	7.0"	6.0"	6.0"	6.0"	5.0"	5.0"	5.0"	5.0"	4.0"	4.0"	4.0"	4.0"	4.0"	4.0"	4.0"	N/A	N/A	N/A	N/A	N/A	N/A	N/A	N/A
		100	10.0"	9.0"	8.0"	7.0"	7.0"	6.0"	6.0"	5.0"	5.0"	5.0"	5.0"	4.0"	4.0"	4.0"	4.0"	4.0"	4.0"	4.0"	N/A	N/A	N/A	N/A	N/A	N/A	N/A	N/A	N/A
		105	9.0"	8.0"	7.0"	7.0"	6.0"	6.0"	6.0"	5.0"	5.0"	5.0"	5.0"	4.0"	4.0"	4.0"	4.0"	4.0"	4.0"	N/A	N/A	N/A	N/A	N/A	N/A	N/A	N/A	N/A	N/A
		110	9.0"	8.0"	7.0"	7.0"	6.0"	6.0"	5.0"	5.0"	5.0"	5.0"	4.0"	4.0"	4.0"	4.0"	4.0"	4.0"	N/A	N/A	N/A	N/A	N/A	N/A	N/A	N/A	N/A	N/A	N/A
		115	9.0"	8.0"	7.0"	6.0"	6.0"	6.0"	5.0"	5.0"	5.0"	4.0"	4.0"	4.0"	4.0"	4.0"	4.0"	N/A	N/A	N/A	N/A	N/A	N/A	N/A	N/A	N/A	N/A	N/A	N/A
		120	8.0"	7.0"	7.0"	6.0"	6.0"	5.0"	5.0"	5.0"	5.0"	4.0"	4.0"	4.0"	4.0"	4.0"	N/A	N/A	N/A	N/A	N/A	N/A	N/A	N/A	N/A	N/A	N/A	N/A	N/A
		125	8.0"	7.0"	7.0"	6.0"	6.0"	5.0"	5.0"	5.0"	4.0"	4.0"	4.0"	4.0"	4.0"	N/A	N/A	N/A	N/A	N/A	N/A	N/A	N/A	N/A	N/A	N/A	N/A	N/A	N/A
		130	8.0"	7.0"	6.0"	6.0"	5.0"	5.0"	5.0"	4.0"	4.0"	4.0"	4.0"	4.0"	N/A	N/A	N/A	N/A	N/A	N/A	N/A	N/A	N/A	N/A	N/A	N/A	N/A	N/A	N/A
	1/4" ELCO ULTRACON HFH 1-1/2" THREAD PENETRATION		3/4"" MIN EDGE DISTANCE																									
		30	18.0"	18.0"	18.0"	16.0"	15.0"	14.0"	13.0"	13.0"	12.0"	11.0"	11.0"	10.0"	10.0"	10.0"	9.0"	9.0"	9.0"	8.0"	8.0"	8.0"	8.0"	8.0"	7.0"	7.0"	7.0"	7.0"	7.0"
		35	18.0"	17.0"	16.0"	15.0"	14.0"	13.0"	12.0"	11.0"	11.0"	10.0"	10.0"	9.0"	9.0"	9.0"	8.0"	8.0"	8.0"	7.0"	7.0"	7.0"	7.0"	7.0"	7.0"	6.0"	6.0"	6.0"	6.0"
		40	18.0"	16.0"	15.0"	13.0"	12.0"	12.0"	11.0"	10.0"	10.0"	9.0"	9.0"	9.0"	8.0"	8.0"	8.0"	7.0"	7.0"	7.0"	7.0"	6.0"	6.0"	6.0"	6.0"	6.0"	6.0"	6.0"	5.0"
		45	16.0"	15.0"	13.0"	12.0"	11.0"	11.0"	10.0"	10.0"	9.0"	9.0"	8.0"	8.0"	8.0"	7.0"	7.0"	7.0"	7.0"	6.0"	6.0"	6.0"	6.0"	6.0"	5.0"	5.0"	5.0"	5.0"	5.0"
		50	15.0"	14.0"	12.0"	11.0"	11.0"	10.0"	9.0"	9.0"	8.0"	8.0"	8.0"	7.0"	7.0"	7.0"	6.0"	6.0"	6.0"	6.0"	6.0"	5.0"	5.0"	5.0"	5.0"	5.0"	5.0"	5.0"	5.0"
		55	14.0"	13.0"	12.0"	11.0"	10.0"	9.0"	9.0"	8.0"	8.0"	7.0"	7.0"	7.0"	7.0"	6.0"	6.0"	6.0"	6.0"	5.0"	5.0"	5.0"	5.0"	5.0"	5.0"	5.0"	4.0"	4.0"	4.0"
		60	13.0"	12.0"	11.0"	10.0"	9.0"	9.0"	8.0"	8.0"	7.0"	7.0"	7.0"	6.0"	6.0"	6.0"	6.0"	6.0"	5.0"	5.0"	5.0"	5.0"	5.0"	5.0"	4.0"	4.0"	4.0"	4.0"	4.0"
		65	13.0"	11.0"	10.0"	10.0"	9.0"	8.0"	8.0"	7.0"	7.0"	7.0"	6.0"	6.0"	6.0"	6.0"	5.0"	5.0"	5.0"	5.0"	5.0"	5.0"	4.0"	4.0"	4.0"	4.0"	4.0"	4.0"	4.0"
		70	12.0"	11.0"	10.0"	9.0"	8.0"	8.0"	7.0"	7.0"	7.0"	6.0"	6.0"	6.0"	5.0"	5.0"	5.0"	5.0"	5.0"	5.0"	4.0"	4.0"	4.0"	4.0"	4.0"	4.0"	4.0"	4.0"	4.0"
		75	11.0"	10.0"	9.0"	9.0"	8.0"	7.0"	7.0"	7.0"	6.0"	6.0"	6.0"	5.0"	5.0"	5.0"	5.0"	5.0"	4.0"	4.0"	4.0"	4.0"	4.0"	4.0"	4.0"	4.0"	4.0"	N/A	N/A
		80	11.0"	10.0"	9.0"	8.0"	8.0"	7.0"	7.0"	6.0"	6.0"	6.0"	5.0"	5.0"	5.0"	5.0"	5.0"	4.0"	4.0"	4.0"	4.0"	4.0"	4.0"	4.0"	4.0"	N/A	N/A	N/A	N/A
		85	10.0"	9.0"	9.0"	8.0"	7.0"	7.0"	6.0"	6.0"	6.0"	5.0"	5.0"	5.0"	5.0"	5.0"	4.0"	4.0"	4.0"	4.0"	4.0"	4.0"	4.0"	N/A	N/A	N/A	N/A	N/A	N/A
		90	10.0"	9.0"	8.0"	8.0"	7.0"	7.0"	6.0"	6.0"	5.0"	5.0"	5.0"	5.0"	5.0"	4.0"	4.0"	4.0"	4.0"	4.0"	4.0"	4.0"	N/A	N/A	N/A	N/A	N/A	N/A	N/A
		95	10.0"	9.0"	8.0"	7.0"	7.0"	6.0"	6.0"	6.0"	5.0"	5.0"	5.0"	5.0"	4.0"	4.0"	4.0"	4.0"	4.0"	4.0"	N/A	N/A	N/A	N/A	N/A	N/A	N/A	N/A	N/A
		100	9.0"	8.0"	8.0"	7.0"	6.0"	6.0"	6.0"	5.0"	5.0"	5.0"	5.0"	4.0"	4.0"	4.0"	4.0"	4.0"	4.0"	4.0"	N/A	N/A	N/A	N/A	N/A	N/A	N/A	N/A	N/A
		105	9.0"	8.0"	7.0"	7.0"	6.0"	6.0"	5.0"	5.0"	5.0"	5.0"	4.0"	4.0"	4.0"	4.0"	4.0"	4.0"	N/A	N/A	N/A	N/A	N/A	N/A	N/A	N/A	N/A	N/A	N/A
		110	9.0"	8.0"	7.0"	7.0"	6.0"	6.0"	5.0"	5.0"	5.0"	4.0"	4.0"	4.0"	4.0"	4.0"	4.0"	N/A	N/A	N/A	N/A	N/A	N/A	N/A	N/A	N/A	N/A	N/A	N/A
		115	8.0"	8.0"	7.0"	6.0"	6.0"	5.0"	5.0"	5.0"	5.0"	4.0"	4.0"	4.0"	4.0"	4.0"	N/A	N/A	N/A	N/A	N/A	N/A	N/A	N/A	N/A	N/A	N/A	N/A	N/A
		120	8.0"	7.0"	7.0"	6.0"	6.0"	5.0"	5.0"	5.0"	4.0"	4.0"	4.0"	4.0"	4.0"	N/A	N/A	N/A	N/A	N/A	N/A	N/A	N/A	N/A	N/A	N/A	N/A	N/A	N/A
		125	8.0"	7.0"	6.0"	6.0"	5.0"	5.0"	5.0"	5.0"	4.0"	4.0"	4.0"	4.0"	4.0"	N/A	N/A	N/A	N/A	N/A	N/A	N/A	N/A	N/A	N/A	N/A	N/A	N/A	N/A
		130	8.0"	7.0"	6.0"	6.0"	5.0"	5.0"	5.0"	4.0"	4.0"	4.0"	4.0"	4.0"	N/A	N/A	N/A	N/A	N/A	N/A	N/A	N/A	N/A	N/A	N/A	N/A	N/A	N/A	N/A

NOTES:
1. THE SPACING ON THIS CHART APPLIES ONLY TO THE INSTALLATION OF STRAP BRACKETS.

FRANK L. BENNARDO, P.E.
PE# 0046549

10/20/2017

☐ E CHECKED, CONFORMS P.E. MARKS BELOW
FRANK L. BENNARDO, P.E.
46549

FRANK L. BENNARDO LICENSE No PE0046549 STATE OF FLORIDA PROFESSIONAL ENGINEER

ENGINEERING EXPRESS®
CORPORATE OFFICE:
160 SW 12th AVE, SUITE 106
DEERFIELD BEACH, FL 33442
P: (954) 354-0660 F: (954) 354-0443
E: HELLO@ENGINEERINGEXPRESS.COM
ENGINEERINGEXPRESS.COM
CERT OF AUTH #9885

STORM SMART INDUSTRIES, INC.
6182 IDLEWILD STREET
FORT MYERS , FL
(239) 938-1000

STORM CATCHER WIND ABATEMENT SYSTEM FL11291.2 HVHZ
-
-, FL

REMARKS	DRWN	CHKD	DATE
INIT ISSUE	RWN	FLB	10/18/17
	"	"	"
	"	"	"
	"	"	"
	"	"	"

THIS DOCUMENT IS THE PROPERTY OF ENGINEERING EXPRESS, AND SHALL NOT BE REPRODUCED IN WHOLE OR PART WITHOUT WRITTEN CONSENT OF ENGINEERING EXPRESS. ALTERATIONS, ADDITIONS, OR OTHER MARKINGS TO THIS DOCUMENT ARE NOT PERMITTED AND INVALIDATE OUR CERTIFICATION.

COPYRIGHT ENGINEERING EXPRESS®

16-3080

SCALE: NTS UNLESS NOTED

10/20/2017 - 3:08pm zachr V:\Projects\16-3080 Storm Catcher Wind Abatement System FL11291-R4\WP\2017 FBC Update\16-3080e-Dwg-11291.2.dwg

$\frac{1}{4}$" ELCO DRIL-FLEX HWH

TABLE 24 - ALUMINUM & STEEL

ANCHOR TYPE	HOST STRUCT.	LOAD (psf)	SPANS 0" ≤ 3'	SPANS 3' ≤ 3'-6"	SPANS 3'-7" ≤ 3'	SPANS 4' ≤ 4'-6"	SPANS 4'-7" ≤ 5'	SPANS 5' ≤ 5'-6"	SPANS 5'-7" ≤ 6'	SPANS 6' ≤ 6'-6"	SPANS 6'-7" ≤ 7'	SPANS 7' ≤ 7'-6"	SPANS 7'-7" ≤ 8'	SPANS 8' ≤ 8'-6"	SPANS 8'-7" ≤ 9'	SPANS 9' ≤ 9'-6"	SPANS 9'-7" ≤ 10'	SPANS 10' ≤ 10'-6"	SPANS 10'-7" ≤ 11'	SPANS 11' ≤ 11'-6"	SPANS 11'-7" ≤ 12'	SPANS 12' ≤ 12'-6"	SPANS 12'-7" ≤ 13'	SPANS 13' ≤ 13'-6"	SPANS 13'-7" ≤ 14'	SPANS 14' ≤ 14'-6"	SPANS 14'-7" ≤ 15'	SPANS 15' ≤ 15'-6"	SPANS 15'-16" ≤ 16'
			1/2" MIN EDGE DISTANCE																									
1/4"-14 ELCO DRIL-FLEX HWH	1/8" ALUMINUM	30	12.0"	12.0"	12.0"	12.0"	12.0"	12.0"	12.0"	12.0"	12.0"	12.0"	12.0"	12.0"	12.0"	12.0"	11.0"	11.0"	10.0"	10.0"	10.0"	9.0"	9.0"	9.0"	9.0"	8.0"	8.0"	8.0"	8.0"
		35	12.0"	12.0"	12.0"	12.0"	12.0"	12.0"	12.0"	12.0"	12.0"	12.0"	12.0"	11.0"	11.0"	10.0"	10.0"	10.0"	9.0"	9.0"	9.0"	8.0"	8.0"	8.0"	8.0"	7.0"	7.0"	7.0"	7.0"
		40	12.0"	12.0"	12.0"	12.0"	12.0"	12.0"	12.0"	12.0"	12.0"	11.0"	11.0"	10.0"	10.0"	9.0"	9.0"	9.0"	8.0"	8.0"	8.0"	7.0"	7.0"	7.0"	7.0"	7.0"	6.0"	6.0"	6.0"
		45	12.0"	12.0"	12.0"	12.0"	12.0"	12.0"	12.0"	11.0"	11.0"	10.0"	10.0"	9.0"	9.0"	8.0"	8.0"	8.0"	7.0"	7.0"	7.0"	7.0"	7.0"	6.0"	6.0"	6.0"	6.0"	6.0"	5.0"
		50	12.0"	12.0"	12.0"	12.0"	12.0"	12.0"	11.0"	11.0"	10.0"	9.0"	9.0"	8.0"	8.0"	8.0"	7.0"	7.0"	7.0"	7.0"	6.0"	6.0"	6.0"	6.0"	6.0"	5.0"	5.0"	5.0"	5.0"
		55	12.0"	12.0"	12.0"	12.0"	12.0"	11.0"	10.0"	10.0"	9.0"	9.0"	8.0"	8.0"	7.0"	7.0"	7.0"	7.0"	6.0"	6.0"	6.0"	6.0"	6.0"	5.0"	5.0"	5.0"	5.0"	5.0"	5.0"
		60	12.0"	12.0"	12.0"	12.0"	11.0"	10.0"	10.0"	9.0"	9.0"	8.0"	8.0"	7.0"	7.0"	7.0"	6.0"	6.0"	6.0"	6.0"	5.0"	5.0"	5.0"	5.0"	5.0"	5.0"	5.0"	4.0"	4.0"
		65	12.0"	12.0"	12.0"	11.0"	11.0"	10.0"	9.0"	9.0"	8.0"	8.0"	7.0"	7.0"	7.0"	6.0"	6.0"	6.0"	6.0"	5.0"	5.0"	5.0"	5.0"	5.0"	4.0"	4.0"	4.0"	4.0"	4.0"
		70	12.0"	12.0"	12.0"	11.0"	10.0"	9.0"	9.0"	8.0"	8.0"	7.0"	7.0"	6.0"	6.0"	6.0"	6.0"	5.0"	5.0"	5.0"	5.0"	5.0"	4.0"	4.0"	4.0"	4.0"	4.0"	4.0"	4.0"
		75	12.0"	12.0"	11.0"	10.0"	9.0"	9.0"	8.0"	8.0"	7.0"	7.0"	6.0"	6.0"	6.0"	6.0"	5.0"	5.0"	5.0"	5.0"	5.0"	4.0"	4.0"	4.0"	4.0"	4.0"	4.0"	4.0"	3.0"
		80	12.0"	12.0"	11.0"	10.0"	9.0"	8.0"	8.0"	7.0"	7.0"	6.0"	6.0"	6.0"	5.0"	5.0"	5.0"	5.0"	5.0"	4.0"	4.0"	4.0"	4.0"	4.0"	4.0"	4.0"	3.0"	3.0"	3.0"
		85	12.0"	11.0"	10.0"	9.0"	8.0"	8.0"	7.0"	7.0"	6.0"	6.0"	6.0"	5.0"	5.0"	5.0"	5.0"	5.0"	4.0"	4.0"	4.0"	4.0"	4.0"	4.0"	4.0"	3.0"	3.0"	3.0"	3.0"
		90	12.0"	11.0"	10.0"	9.0"	8.0"	7.0"	7.0"	7.0"	6.0"	6.0"	5.0"	5.0"	5.0"	5.0"	5.0"	4.0"	4.0"	4.0"	4.0"	4.0"	4.0"	3.0"	3.0"	3.0"	3.0"	3.0"	3.0"
		95	12.0"	10.0"	9.0"	8.0"	8.0"	7.0"	7.0"	6.0"	6.0"	6.0"	5.0"	5.0"	5.0"	4.0"	4.0"	4.0"	4.0"	4.0"	4.0"	4.0"	3.0"	3.0"	3.0"	3.0"	3.0"	3.0"	3.0"
		100	11.0"	10.0"	9.0"	8.0"	7.0"	7.0"	6.0"	6.0"	6.0"	5.0"	5.0"	5.0"	5.0"	4.0"	4.0"	4.0"	4.0"	4.0"	3.0"	3.0"	3.0"	3.0"	3.0"	3.0"	3.0"	3.0"	3.0"
		105	11.0"	10.0"	9.0"	8.0"	7.0"	7.0"	6.0"	6.0"	5.0"	5.0"	5.0"	5.0"	4.0"	4.0"	4.0"	4.0"	4.0"	3.0"	3.0"	3.0"	3.0"	3.0"	3.0"	3.0"	3.0"	3.0"	3.0"
		110	10.0"	9.0"	8.0"	7.0"	7.0"	6.0"	6.0"	6.0"	5.0"	5.0"	5.0"	4.0"	4.0"	4.0"	4.0"	4.0"	3.0"	3.0"	3.0"	3.0"	3.0"	3.0"	3.0"	3.0"	3.0"	2.0"	2.0"
		115	10.0"	9.0"	8.0"	7.0"	7.0"	6.0"	6.0"	5.0"	5.0"	5.0"	4.0"	4.0"	4.0"	4.0"	4.0"	3.0"	3.0"	3.0"	3.0"	3.0"	3.0"	3.0"	3.0"	3.0"	2.0"	2.0"	2.0"
		120	10.0"	9.0"	8.0"	7.0"	6.0"	6.0"	5.0"	5.0"	5.0"	5.0"	4.0"	4.0"	4.0"	4.0"	3.0"	3.0"	3.0"	3.0"	3.0"	3.0"	3.0"	3.0"	3.0"	2.0"	2.0"	2.0"	2.0"
		125	9.0"	8.0"	7.0"	7.0"	6.0"	6.0"	5.0"	5.0"	5.0"	4.0"	4.0"	4.0"	4.0"	4.0"	3.0"	3.0"	3.0"	3.0"	3.0"	3.0"	3.0"	3.0"	3.0"	2.0"	2.0"	2.0"	2.0"
		130	9.0"	8.0"	7.0"	7.0"	6.0"	6.0"	5.0"	5.0"	4.0"	4.0"	4.0"	4.0"	4.0"	3.0"	3.0"	3.0"	3.0"	3.0"	3.0"	3.0"	3.0"	2.0"	2.0"	2.0"	2.0"	2.0"	2.0"
			3/8" MIN EDGE DISTANCE																									
	16 GA STEEL	30	12.0"	12.0"	12.0"	12.0"	12.0"	12.0"	12.0"	12.0"	12.0"	12.0"	12.0"	12.0"	12.0"	12.0"	12.0"	12.0"	12.0"	12.0"	12.0"	12.0"	12.0"	12.0"	12.0"	12.0"	12.0"	12.0"	12.0"
		35	12.0"	12.0"	12.0"	12.0"	12.0"	12.0"	12.0"	12.0"	12.0"	12.0"	12.0"	12.0"	12.0"	12.0"	12.0"	12.0"	12.0"	12.0"	12.0"	12.0"	12.0"	11.0"	11.0"	11.0"	11.0"	11.0"	10.0"
		40	12.0"	12.0"	12.0"	12.0"	12.0"	12.0"	12.0"	12.0"	12.0"	12.0"	12.0"	12.0"	12.0"	12.0"	12.0"	12.0"	12.0"	12.0"	12.0"	11.0"	11.0"	11.0"	10.0"	10.0"	10.0"	10.0"	9.0"
		45	12.0"	12.0"	12.0"	12.0"	12.0"	12.0"	12.0"	12.0"	12.0"	12.0"	12.0"	12.0"	12.0"	12.0"	12.0"	12.0"	11.0"	11.0"	11.0"	10.0"	10.0"	10.0"	9.0"	9.0"	9.0"	9.0"	8.0"
		50	12.0"	12.0"	12.0"	12.0"	12.0"	12.0"	12.0"	12.0"	12.0"	12.0"	12.0"	12.0"	12.0"	12.0"	11.0"	11.0"	10.0"	10.0"	10.0"	9.0"	9.0"	9.0"	9.0"	8.0"	8.0"	8.0"	8.0"
		55	12.0"	12.0"	12.0"	12.0"	12.0"	12.0"	12.0"	12.0"	12.0"	12.0"	12.0"	12.0"	11.0"	11.0"	10.0"	10.0"	10.0"	9.0"	9.0"	9.0"	9.0"	8.0"	8.0"	8.0"	8.0"	7.0"	7.0"
		60	12.0"	12.0"	12.0"	12.0"	12.0"	12.0"	12.0"	12.0"	12.0"	12.0"	12.0"	11.0"	11.0"	10.0"	10.0"	9.0"	9.0"	9.0"	8.0"	8.0"	8.0"	8.0"	8.0"	7.0"	7.0"	7.0"	7.0"
		65	12.0"	12.0"	12.0"	12.0"	12.0"	12.0"	12.0"	12.0"	12.0"	11.0"	11.0"	10.0"	10.0"	10.0"	9.0"	9.0"	9.0"	8.0"	8.0"	8.0"	7.0"	7.0"	7.0"	7.0"	7.0"	7.0"	6.0"
		70	12.0"	12.0"	12.0"	12.0"	12.0"	12.0"	12.0"	12.0"	11.0"	11.0"	10.0"	10.0"	9.0"	9.0"	9.0"	8.0"	8.0"	8.0"	8.0"	7.0"	7.0"	7.0"	7.0"	6.0"	6.0"	6.0"	6.0"
		75	12.0"	12.0"	12.0"	12.0"	12.0"	12.0"	12.0"	11.0"	11.0"	10.0"	10.0"	9.0"	9.0"	9.0"	8.0"	8.0"	8.0"	7.0"	7.0"	7.0"	7.0"	6.0"	6.0"	6.0"	6.0"	6.0"	6.0"
		80	12.0"	12.0"	12.0"	12.0"	12.0"	12.0"	12.0"	11.0"	10.0"	10.0"	9.0"	9.0"	8.0"	8.0"	8.0"	8.0"	7.0"	7.0"	7.0"	7.0"	6.0"	6.0"	6.0"	6.0"	6.0"	6.0"	5.0"
		85	12.0"	12.0"	12.0"	12.0"	12.0"	12.0"	11.0"	10.0"	10.0"	9.0"	9.0"	8.0"	8.0"	8.0"	7.0"	7.0"	7.0"	7.0"	6.0"	6.0"	6.0"	6.0"	6.0"	6.0"	5.0"	5.0"	5.0"
		90	12.0"	12.0"	12.0"	12.0"	12.0"	11.0"	11.0"	10.0"	9.0"	9.0"	8.0"	8.0"	8.0"	7.0"	7.0"	7.0"	7.0"	6.0"	6.0"	6.0"	6.0"	6.0"	5.0"	5.0"	5.0"	5.0"	5.0"
		95	12.0"	12.0"	12.0"	12.0"	12.0"	11.0"	10.0"	10.0"	9.0"	9.0"	8.0"	8.0"	7.0"	7.0"	7.0"	7.0"	6.0"	6.0"	6.0"	6.0"	6.0"	5.0"	5.0"	5.0"	5.0"	5.0"	5.0"
		100	12.0"	12.0"	12.0"	12.0"	11.0"	10.0"	10.0"	9.0"	9.0"	8.0"	8.0"	7.0"	7.0"	7.0"	7.0"	6.0"	6.0"	6.0"	6.0"	5.0"	5.0"	5.0"	5.0"	5.0"	5.0"	5.0"	4.0"
		105	12.0"	12.0"	12.0"	12.0"	11.0"	10.0"	9.0"	9.0"	8.0"	8.0"	8.0"	7.0"	7.0"	7.0"	6.0"	6.0"	6.0"	6.0"	5.0"	5.0"	5.0"	5.0"	5.0"	5.0"	5.0"	4.0"	4.0"
		110	12.0"	12.0"	12.0"	11.0"	10.0"	10.0"	9.0"	9.0"	8.0"	8.0"	7.0"	7.0"	7.0"	6.0"	6.0"	6.0"	6.0"	5.0"	5.0"	5.0"	5.0"	5.0"	5.0"	4.0"	4.0"	4.0"	4.0"
		115	12.0"	12.0"	12.0"	11.0"	10.0"	9.0"	9.0"	8.0"	8.0"	7.0"	7.0"	7.0"	6.0"	6.0"	6.0"	6.0"	5.0"	5.0"	5.0"	5.0"	5.0"	5.0"	4.0"	4.0"	4.0"	4.0"	4.0"
		120	12.0"	12.0"	12.0"	11.0"	10.0"	9.0"	8.0"	8.0"	8.0"	7.0"	7.0"	6.0"	6.0"	6.0"	6.0"	5.0"	5.0"	5.0"	5.0"	5.0"	5.0"	4.0"	4.0"	4.0"	4.0"	4.0"	4.0"
		125	12.0"	12.0"	11.0"	10.0"	9.0"	9.0"	8.0"	8.0"	7.0"	7.0"	7.0"	6.0"	6.0"	6.0"	6.0"	5.0"	5.0"	5.0"	5.0"	5.0"	5.0"	4.0"	4.0"	4.0"	4.0"	4.0"	4.0"
		130	12.0"	12.0"	11.0"	10.0"	9.0"	9.0"	8.0"	7.0"	7.0"	7.0"	6.0"	6.0"	6.0"	6.0"	6.0"	5.0"	5.0"	5.0"	5.0"	5.0"	5.0"	4.0"	4.0"	4.0"	4.0"	4.0"	4.0"

ANCHOR TYPE	HOST STRUCT.	LOAD (psf)	SPANS 16' ≤ 16'-6"	SPANS 16'-7" ≤ 17'	SPANS 17' ≤ 17'-6"	SPANS 17'-7" ≤ 18'	SPANS 18' ≤ 18'-6"	SPANS 18'-7" ≤ 19'	SPANS 19' ≤ 19'-6"	SPANS 19'-7" ≤ 20'	SPANS 20' ≤ 20'-6"	SPANS 20'-7" ≤ 21'	SPANS 21' ≤ 21'-6"	SPANS 21'-7" ≤ 22'	SPANS 22' ≤ 22'-6"	SPANS 22'-7" ≤ 23'	SPANS 23' ≤ 23'-6"	SPANS 23'-7" ≤ 24'	SPANS 24' ≤ 24'-6"	SPANS 24'-7" ≤ 25'	SPANS 25' ≤ 25'-6"	SPANS 25'-7" ≤ 26'	SPANS 26' ≤ 26'-6"	SPANS 26'-7" ≤ 27'	SPANS 27' ≤ 27'-6"	SPANS 27'-7" ≤ 28'	SPANS 28' ≤ 28'-6"	SPANS 28'-7" ≤ 29'	SPANS 29' ≤ 29'-6"	SPANS 29'-7" ≤ 30'
			3 1/8" MIN EDGE DISTANCE																										
1/4"-14 ELCO DRIL-FLEX HWH	1/8" ALUMINUM	30	7.0"	7.0"	7.0"	7.0"	7.0"	7.0"	7.0"	6.0"	6.0"	6.0"	6.0"	6.0"	6.0"	6.0"	6.0"	5.0"	5.0"	5.0"	5.0"	5.0"	5.0"	5.0"	5.0"	5.0"	5.0"	5.0"	5.0"
		35	7.0"	6.0"	6.0"	6.0"	6.0"	6.0"	6.0"	6.0"	5.0"	5.0"	5.0"	5.0"	5.0"	5.0"	5.0"	5.0"	5.0"	5.0"	5.0"	4.0"	5.0"	4.0"	4.0"	4.0"	4.0"	4.0"	4.0"
		40	6.0"	6.0"	6.0"	5.0"	5.0"	5.0"	5.0"	5.0"	5.0"	5.0"	5.0"	5.0"	5.0"	4.0"	4.0"	4.0"	4.0"	4.0"	4.0"	4.0"	4.0"	4.0"	4.0"	4.0"	4.0"	4.0"	4.0"
		45	5.0"	5.0"	5.0"	5.0"	5.0"	5.0"	5.0"	4.0"	4.0"	4.0"	4.0"	4.0"	4.0"	4.0"	4.0"	4.0"	4.0"	4.0"	4.0"	4.0"	4.0"	3.0"	3.0"	3.0"	3.0"	3.0"	3.0"
		50	5.0"	5.0"	5.0"	4.0"	4.0"	4.0"	4.0"	4.0"	4.0"	4.0"	4.0"	4.0"	4.0"	4.0"	4.0"	3.0"	3.0"	3.0"	3.0"	3.0"	3.0"	3.0"	3.0"	3.0"	3.0"	3.0"	3.0"
		55	4.0"	4.0"	4.0"	4.0"	4.0"	4.0"	4.0"	4.0"	4.0"	4.0"	4.0"	3.0"	3.0"	3.0"	3.0"	3.0"	3.0"	3.0"	3.0"	3.0"	3.0"	3.0"	3.0"	3.0"	3.0"	3.0"	3.0"
		60	4.0"	4.0"	4.0"	4.0"	4.0"	4.0"	4.0"	3.0"	3.0"	3.0"	3.0"	3.0"	3.0"	3.0"	3.0"	3.0"	3.0"	3.0"	3.0"	3.0"	3.0"	3.0"	3.0"	3.0"	3.0"	2.0"	2.0"
			2 1/2" MIN EDGE DISTANCE																										
	16 GA STEEL	30	11.0"	11.0"	11.0"	11.0"	10.0"	10.0"	10.0"	10.0"	10.0"	9.0"	9.0"	9.0"	9.0"	9.0"	9.0"	8.0"	8.0"	8.0"	8.0"	8.0"	8.0"	8.0"	8.0"	8.0"	8.0"	8.0"	8.0"
		35	10.0"	10.0"	10.0"	9.0"	9.0"	9.0"	9.0"	9.0"	8.0"	8.0"	8.0"	8.0"	8.0"	8.0"	8.0"	7.0"	7.0"	7.0"	7.0"	7.0"	7.0"	7.0"	7.0"	7.0"	7.0"	7.0"	7.0"
		40	9.0"	9.0"	9.0"	8.0"	8.0"	8.0"	8.0"	8.0"	8.0"	8.0"	7.0"	7.0"	7.0"	7.0"	7.0"	7.0"	7.0"	7.0"	6.0"	6.0"	6.0"	6.0"	6.0"	6.0"	6.0"	6.0"	6.0"
		45	8.0"	8.0"	8.0"	8.0"	8.0"	7.0"	7.0"	7.0"	7.0"	7.0"	7.0"	7.0"	6.0"	6.0"	6.0"	6.0"	6.0"	6.0"	6.0"	6.0"	6.0"	6.0"	6.0"	6.0"	6.0"	6.0"	5.0"
		50	8.0"	7.0"	7.0"	7.0"	7.0"	7.0"	7.0"	7.0"	6.0"	6.0"	6.0"	6.0"	6.0"	6.0"	6.0"	6.0"	6.0"	6.0"	5.0"	5.0"	5.0"	5.0"	5.0"	5.0"	5.0"	5.0"	5.0"
		55	7.0"	7.0"	7.0"	7.0"	6.0"	6.0"	6.0"	6.0"	6.0"	6.0"	6.0"	6.0"	6.0"	5.0"	5.0"	5.0"	5.0"	5.0"	5.0"	5.0"	5.0"	5.0"	5.0"	5.0"	5.0"	5.0"	5.0"
		60	7.0"	6.0"	6.0"	6.0"	6.0"	6.0"	6.0"	6.0"	6.0"	5.0"	5.0"	5.0"	5.0"	5.0"	5.0"	5.0"	5.0"	5.0"	5.0"	5.0"	5.0"	5.0"	4.0"	4.0"	4.0"	4.0"	4.0"

NOTES:

1. APPROVED FOR USE WITH ALL TRACKS

FRANK L. BENNARDO, P.E.
PE# 0046549

10/20/2017

IF CHECKED, CERTIFIED PER ATTACHED LETTER

FRANK L. BENNARDO, P.E.
46549

FRANK L. BENNARDO LICENSE No PE0046549 STATE OF FLORIDA PROFESSIONAL ENGINEER

ENGINEERING EXPRESS®
CORPORATE OFFICE:
160 SW 12th AVE, SUITE 106
DEERFIELD BEACH, FL 33442
P: (954) 354-0660 F: (954) 354-0443
E: HELLO@ENGINEERINGEXPRESS.COM
ENGINEERINGEXPRESS.COM
CERT OF AUTH #9885

STORM SMART INDUSTRIES, INC.
6182 IDLEWILD STREET
FORT MYERS , FL
(239) 938-1000

STORM CATCHER WIND ABATEMENT SYSTEM FL11291.2 HVHZ

-
-, FL

REMARKS	DRWN	CHKD	DATE
INIT ISSUE	RWN	FLB	10/18/17

THIS DOCUMENT IS THE PROPERTY OF ENGINEERING EXPRESS, AND SHALL NOT BE REPRODUCED IN WHOLE OR PART WITHOUT WRITTEN CONSENT OF ENGINEERING EXPRESS. ALTERATIONS, ADDITIONS, OR OTHER MARKINGS TO THIS DOCUMENT ARE NOT PERMITTED AND INVALIDATE OUR CERTIFICATION.

COPYRIGHT ENGINEERING EXPRESS ®

16-3080

SCALE: NTS UNLESS NOTED

10/20/2017 3:08pm zachr V:\Projects\16-3080 Storm Catcher Wind Abatement System FL11291.2\DWG\11291.2.dwg

$\frac{1}{4}$" ELCO DRIL-FLEX HWH

TABLE 25 - ALUMINUM & STEEL

ANCHOR TYPE	HOST STRUCT.	LOAD (psf)	SPANS 0" ≤ 3'	SPANS 3' ≤ 3'-6"	SPANS 3'-7" ≤ 4'	SPANS 4' ≤ 4'-6"	SPANS 4'-7" ≤ 5'	SPANS 5' ≤ 5'-6"	SPANS 5'-7" ≤ 6'	SPANS 6' ≤ 6'-6"	SPANS 6'-7" ≤ 7'	SPANS 7' ≤ 7'-6"	SPANS 7'-7" ≤ 8'	SPANS 8' ≤ 8'-6"	SPANS 8'-7" ≤ 9'	SPANS 9' ≤ 9'-6"	SPANS 9'-7" ≤ 10'	SPANS 10' ≤ 10'-6"	SPANS 10'-7" ≤ 11'	SPANS 11' ≤ 11'-6"	SPANS 11'-7" ≤ 12'	SPANS 12' ≤ 12'-6"	SPANS 12'-7" ≤ 13'	SPANS 13' ≤ 13'-6"	SPANS 13'-7" ≤ 14'	SPANS 14' ≤ 14'-6"	SPANS 14'-7" ≤ 15'	SPANS 15' ≤ 15'-6"	SPANS 15'-16" ≤ 16'
		1/2" MIN EDGE DISTANCE																											
1/4"-14 ELCO DRIL-FLEX HWH	1/4" ALUMINUM	30	12.0"	12.0"	12.0"	12.0"	12.0"	12.0"	12.0"	12.0"	12.0"	12.0"	12.0"	12.0"	12.0"	12.0"	12.0"	12.0"	12.0"	12.0"	12.0"	12.0"	12.0"	12.0"	12.0"	12.0"	12.0"	12.0"	12.0"
		35	12.0"	12.0"	12.0"	12.0"	12.0"	12.0"	12.0"	12.0"	12.0"	12.0"	12.0"	12.0"	12.0"	12.0"	12.0"	12.0"	12.0"	12.0"	12.0"	12.0"	12.0"	12.0"	12.0"	12.0"	12.0"	12.0"	11.0"
		40	12.0"	12.0"	12.0"	12.0"	12.0"	12.0"	12.0"	12.0"	12.0"	12.0"	12.0"	12.0"	12.0"	12.0"	12.0"	12.0"	12.0"	12.0"	12.0"	12.0"	12.0"	12.0"	11.0"	11.0"	11.0"	11.0"	10.0"
		45	12.0"	12.0"	12.0"	12.0"	12.0"	12.0"	12.0"	12.0"	12.0"	12.0"	12.0"	12.0"	12.0"	12.0"	12.0"	12.0"	12.0"	12.0"	11.0"	11.0"	11.0"	10.0"	10.0"	10.0"	10.0"	10.0"	9.0"
		50	12.0"	12.0"	12.0"	12.0"	12.0"	12.0"	12.0"	12.0"	12.0"	12.0"	12.0"	12.0"	12.0"	12.0"	12.0"	12.0"	12.0"	11.0"	10.0"	10.0"	10.0"	10.0"	9.0"	9.0"	9.0"	9.0"	9.0"
		55	12.0"	12.0"	12.0"	12.0"	12.0"	12.0"	12.0"	12.0"	12.0"	12.0"	12.0"	12.0"	12.0"	12.0"	12.0"	11.0"	11.0"	10.0"	10.0"	10.0"	9.0"	9.0"	9.0"	9.0"	8.0"	8.0"	8.0"
		60	12.0"	12.0"	12.0"	12.0"	12.0"	12.0"	12.0"	12.0"	12.0"	12.0"	12.0"	12.0"	12.0"	11.0"	11.0"	10.0"	10.0"	10.0"	9.0"	9.0"	9.0"	9.0"	8.0"	8.0"	8.0"	8.0"	8.0"
		65	12.0"	12.0"	12.0"	12.0"	12.0"	12.0"	12.0"	12.0"	12.0"	12.0"	12.0"	11.0"	11.0"	11.0"	10.0"	10.0"	9.0"	9.0"	9.0"	9.0"	8.0"	8.0"	8.0"	8.0"	7.0"	7.0"	7.0"
		70	12.0"	12.0"	12.0"	12.0"	12.0"	12.0"	12.0"	12.0"	12.0"	12.0"	11.0"	11.0"	10.0"	10.0"	10.0"	9.0"	9.0"	9.0"	8.0"	8.0"	8.0"	8.0"	7.0"	7.0"	7.0"	7.0"	7.0"
		75	12.0"	12.0"	12.0"	12.0"	12.0"	12.0"	12.0"	12.0"	12.0"	11.0"	11.0"	10.0"	10.0"	9.0"	9.0"	9.0"	8.0"	8.0"	8.0"	8.0"	7.0"	7.0"	7.0"	7.0"	7.0"	6.0"	6.0"
		80	12.0"	12.0"	12.0"	12.0"	12.0"	12.0"	12.0"	12.0"	11.0"	11.0"	10.0"	10.0"	9.0"	9.0"	9.0"	8.0"	8.0"	8.0"	8.0"	7.0"	7.0"	7.0"	7.0"	6.0"	6.0"	6.0"	6.0"
		85	12.0"	12.0"	12.0"	12.0"	12.0"	12.0"	12.0"	11.0"	11.0"	10.0"	10.0"	9.0"	9.0"	9.0"	8.0"	8.0"	8.0"	7.0"	7.0"	7.0"	7.0"	6.0"	6.0"	6.0"	6.0"	6.0"	6.0"
		90	12.0"	12.0"	12.0"	12.0"	12.0"	12.0"	12.0"	11.0"	10.0"	10.0"	9.0"	9.0"	9.0"	8.0"	8.0"	8.0"	7.0"	7.0"	7.0"	7.0"	6.0"	6.0"	6.0"	6.0"	6.0"	6.0"	5.0"
		95	12.0"	12.0"	12.0"	12.0"	12.0"	12.0"	11.0"	11.0"	10.0"	9.0"	9.0"	9.0"	8.0"	8.0"	8.0"	7.0"	7.0"	7.0"	7.0"	6.0"	6.0"	6.0"	6.0"	6.0"	5.0"	5.0"	5.0"
		100	11.0"	12.0"	12.0"	12.0"	12.0"	12.0"	11.0"	10.0"	10.0"	9.0"	9.0"	8.0"	8.0"	8.0"	7.0"	7.0"	7.0"	7.0"	6.0"	6.0"	6.0"	6.0"	6.0"	5.0"	5.0"	5.0"	5.0"
		105	11.0"	12.0"	12.0"	12.0"	12.0"	11.0"	10.0"	10.0"	9.0"	9.0"	8.0"	8.0"	8.0"	7.0"	7.0"	7.0"	6.0"	6.0"	6.0"	6.0"	6.0"	5.0"	5.0"	5.0"	5.0"	5.0"	5.0"
		110	10.0"	12.0"	12.0"	12.0"	12.0"	11.0"	10.0"	9.0"	9.0"	8.0"	8.0"	8.0"	7.0"	7.0"	7.0"	7.0"	6.0"	6.0"	6.0"	6.0"	6.0"	5.0"	5.0"	5.0"	5.0"	5.0"	5.0"
		115	10.0"	12.0"	12.0"	12.0"	11.0"	10.0"	10.0"	9.0"	9.0"	8.0"	8.0"	7.0"	7.0"	7.0"	7.0"	6.0"	6.0"	6.0"	6.0"	6.0"	5.0"	5.0"	5.0"	5.0"	5.0"	5.0"	4.0"
		120	10.0"	12.0"	12.0"	12.0"	11.0"	10.0"	9.0"	9.0"	8.0"	8.0"	8.0"	7.0"	7.0"	7.0"	6.0"	6.0"	6.0"	6.0"	5.0"	5.0"	5.0"	5.0"	5.0"	5.0"	5.0"	4.0"	4.0"
		125	9.0"	12.0"	12.0"	11.0"	10.0"	10.0"	9.0"	9.0"	8.0"	8.0"	7.0"	7.0"	7.0"	6.0"	6.0"	6.0"	6.0"	5.0"	5.0"	5.0"	5.0"	5.0"	4.0"	4.0"	4.0"	4.0"	4.0"
		130	9.0"	12.0"	12.0"	11.0"	10.0"	9.0"	9.0"	8.0"	8.0"	7.0"	7.0"	7.0"	6.0"	6.0"	6.0"	6.0"	5.0"	5.0"	5.0"	5.0"	5.0"	5.0"	4.0"	4.0"	4.0"	4.0"	4.0"
		3/8" MIN EDGE DISTANCE																											
	1/8" STEEL	30	12.0"	12.0"	12.0"	12.0"	12.0"	12.0"	12.0"	12.0"	12.0"	12.0"	12.0"	12.0"	12.0"	12.0"	12.0"	12.0"	12.0"	12.0"	12.0"	12.0"	12.0"	12.0"	12.0"	12.0"	12.0"	12.0"	12.0"
		35	12.0"	12.0"	12.0"	12.0"	12.0"	12.0"	12.0"	12.0"	12.0"	12.0"	12.0"	12.0"	12.0"	12.0"	12.0"	12.0"	12.0"	12.0"	12.0"	12.0"	12.0"	12.0"	12.0"	12.0"	12.0"	12.0"	12.0"
		40	12.0"	12.0"	12.0"	12.0"	12.0"	12.0"	12.0"	12.0"	12.0"	12.0"	12.0"	12.0"	12.0"	12.0"	12.0"	12.0"	12.0"	12.0"	12.0"	12.0"	12.0"	12.0"	11.0"	11.0"	11.0"	11.0"	10.0"
		45	12.0"	12.0"	12.0"	12.0"	12.0"	12.0"	12.0"	12.0"	12.0"	12.0"	12.0"	12.0"	12.0"	12.0"	12.0"	12.0"	12.0"	12.0"	12.0"	11.0"	11.0"	11.0"	10.0"	10.0"	10.0"	10.0"	10.0"
		50	12.0"	12.0"	12.0"	12.0"	12.0"	12.0"	12.0"	12.0"	12.0"	12.0"	12.0"	12.0"	12.0"	12.0"	12.0"	12.0"	12.0"	11.0"	11.0"	11.0"	10.0"	10.0"	10.0"	10.0"	9.0"	9.0"	9.0"
		55	12.0"	12.0"	12.0"	12.0"	12.0"	12.0"	12.0"	12.0"	12.0"	12.0"	12.0"	12.0"	12.0"	12.0"	12.0"	11.0"	11.0"	11.0"	10.0"	10.0"	10.0"	9.0"	9.0"	9.0"	9.0"	8.0"	8.0"
		60	12.0"	12.0"	12.0"	12.0"	12.0"	12.0"	12.0"	12.0"	12.0"	12.0"	12.0"	12.0"	12.0"	11.0"	11.0"	11.0"	10.0"	10.0"	10.0"	9.0"	9.0"	9.0"	9.0"	8.0"	8.0"	8.0"	8.0"
		65	12.0"	12.0"	12.0"	12.0"	12.0"	12.0"	12.0"	12.0"	12.0"	12.0"	12.0"	12.0"	11.0"	11.0"	10.0"	10.0"	10.0"	9.0"	9.0"	9.0"	9.0"	8.0"	8.0"	8.0"	8.0"	7.0"	7.0"
		70	12.0"	12.0"	12.0"	12.0"	12.0"	12.0"	12.0"	12.0"	12.0"	12.0"	12.0"	11.0"	11.0"	10.0"	10.0"	9.0"	9.0"	9.0"	9.0"	8.0"	8.0"	8.0"	8.0"	7.0"	7.0"	7.0"	7.0"
		75	12.0"	12.0"	12.0"	12.0"	12.0"	12.0"	12.0"	12.0"	12.0"	12.0"	11.0"	11.0"	10.0"	10.0"	9.0"	9.0"	9.0"	8.0"	8.0"	8.0"	8.0"	7.0"	7.0"	7.0"	7.0"	7.0"	7.0"
		80	12.0"	12.0"	12.0"	12.0"	12.0"	12.0"	12.0"	12.0"	12.0"	11.0"	10.0"	10.0"	10.0"	9.0"	9.0"	9.0"	8.0"	8.0"	8.0"	7.0"	7.0"	7.0"	7.0"	7.0"	7.0"	6.0"	6.0"
		85	12.0"	12.0"	12.0"	12.0"	12.0"	12.0"	12.0"	12.0"	11.0"	11.0"	10.0"	10.0"	9.0"	9.0"	8.0"	8.0"	8.0"	8.0"	7.0"	7.0"	7.0"	7.0"	7.0"	6.0"	6.0"	6.0"	6.0"
		90	12.0"	12.0"	12.0"	12.0"	12.0"	12.0"	12.0"	11.0"	11.0"	10.0"	10.0"	9.0"	9.0"	8.0"	8.0"	8.0"	8.0"	7.0"	7.0"	7.0"	7.0"	6.0"	6.0"	6.0"	6.0"	6.0"	6.0"
		95	12.0"	12.0"	12.0"	12.0"	12.0"	12.0"	11.0"	11.0"	10.0"	10.0"	9.0"	9.0"	8.0"	8.0"	8.0"	8.0"	7.0"	7.0"	7.0"	7.0"	6.0"	6.0"	6.0"	6.0"	6.0"	6.0"	5.0"
		100	12.0"	12.0"	12.0"	12.0"	12.0"	12.0"	11.0"	10.0"	10.0"	9.0"	9.0"	8.0"	8.0"	8.0"	7.0"	7.0"	7.0"	7.0"	7.0"	6.0"	6.0"	6.0"	6.0"	6.0"	5.0"	5.0"	5.0"
		105	12.0"	12.0"	12.0"	12.0"	12.0"	11.0"	11.0"	10.0"	9.0"	9.0"	9.0"	8.0"	8.0"	8.0"	7.0"	7.0"	7.0"	6.0"	6.0"	6.0"	6.0"	6.0"	6.0"	5.0"	5.0"	5.0"	5.0"
		110	12.0"	12.0"	12.0"	12.0"	12.0"	11.0"	10.0"	10.0"	9.0"	9.0"	8.0"	8.0"	8.0"	7.0"	7.0"	7.0"	6.0"	6.0"	6.0"	6.0"	6.0"	6.0"	5.0"	5.0"	5.0"	5.0"	5.0"
		115	12.0"	12.0"	12.0"	12.0"	11.0"	11.0"	10.0"	9.0"	9.0"	8.0"	8.0"	8.0"	7.0"	7.0"	7.0"	6.0"	6.0"	6.0"	6.0"	6.0"	5.0"	5.0"	5.0"	5.0"	5.0"	5.0"	5.0"
		120	12.0"	12.0"	12.0"	12.0"	11.0"	10.0"	10.0"	9.0"	9.0"	8.0"	8.0"	7.0"	7.0"	7.0"	7.0"	6.0"	6.0"	6.0"	6.0"	5.0"	5.0"	5.0"	5.0"	5.0"	5.0"	5.0"	4.0"
		125	12.0"	12.0"	12.0"	12.0"	11.0"	10.0"	9.0"	9.0"	8.0"	8.0"	7.0"	7.0"	7.0"	7.0"	6.0"	6.0"	6.0"	6.0"	5.0"	5.0"	5.0"	5.0"	5.0"	5.0"	5.0"	4.0"	4.0"
		130	12.0"	12.0"	12.0"	11.0"	10.0"	10.0"	9.0"	9.0"	8.0"	8.0"	7.0"	7.0"	7.0"	6.0"	6.0"	6.0"	6.0"	5.0"	5.0"	5.0"	5.0"	5.0"	5.0"	5.0"	4.0"	4.0"	4.0"

ANCHOR TYPE	HOST STRUCT.	LOAD (psf)	SPANS 16' ≤ 16'-6"	SPANS 16'-7" ≤ 17'	SPANS 17' ≤ 17'-6"	SPANS 17'-7" ≤ 18'	SPANS 18' ≤ 18'-6"	SPANS 18'-7" ≤ 19'	SPANS 19' ≤ 19'-6"	SPANS 19'-7" ≤ 20'	SPANS 20' ≤ 20'-6"	SPANS 20'-7" ≤ 21'	SPANS 21' ≤ 21'-6"	SPANS 21'-7" ≤ 22'	SPANS 22' ≤ 22'-6"	SPANS 22'-7" ≤ 23'	SPANS 23' ≤ 23'-6"	SPANS 23'-7" ≤ 24'	SPANS 24' ≤ 24'-6"	SPANS 24'-7" ≤ 25'	SPANS 25' ≤ 25'-6"	SPANS 25'-7" ≤ 26'	SPANS 26' ≤ 26'-6"	SPANS 26'-7" ≤ 27'	SPANS 27' ≤ 27'-6"	SPANS 27'-7" ≤ 28'	SPANS 28' ≤ 28'-6"	SPANS 28'-7" ≤ 29'	SPANS 29' ≤ 29'-6"	SPANS 29'-7" ≤ 30'
		1/2" MIN EDGE DISTANCE																											
1/4"-14 ELCO DRIL-FLEX HWH	1/4" ALUMINUM	30	12.0"	12.0"	12.0"	12.0"	11.0"	11.0"	11.0"	11.0"	11.0"	10.0"	10.0"	10.0"	10.0"	10.0"	10.0"	9.0"	9.0"	9.0"	9.0"	9.0"	9.0"	9.0"	9.0"	9.0"	9.0"	8.0"	8.0"
		35	11.0"	11.0"	11.0"	10.0"	10.0"	10.0"	10.0"	10.0"	9.0"	9.0"	9.0"	9.0"	9.0"	9.0"	8.0"	8.0"	8.0"	8.0"	8.0"	8.0"	8.0"	8.0"	8.0"	8.0"	8.0"	7.0"	7.0"
		40	10.0"	10.0"	10.0"	9.0"	9.0"	9.0"	9.0"	9.0"	8.0"	8.0"	8.0"	8.0"	8.0"	8.0"	8.0"	7.0"	7.0"	7.0"	7.0"	7.0"	7.0"	7.0"	7.0"	7.0"	7.0"	7.0"	7.0"
		45	9.0"	9.0"	9.0"	9.0"	8.0"	8.0"	8.0"	8.0"	8.0"	8.0"	7.0"	7.0"	7.0"	7.0"	7.0"	7.0"	7.0"	7.0"	7.0"	6.0"	7.0"	6.0"	6.0"	6.0"	6.0"	6.0"	6.0"
		50	8.0"	8.0"	8.0"	8.0"	8.0"	8.0"	7.0"	7.0"	7.0"	7.0"	7.0"	7.0"	7.0"	7.0"	6.0"	6.0"	6.0"	6.0"	6.0"	6.0"	6.0"	6.0"	6.0"	6.0"	6.0"	6.0"	6.0"
		55	8.0"	8.0"	7.0"	7.0"	7.0"	7.0"	7.0"	7.0"	7.0"	6.0"	6.0"	6.0"	6.0"	6.0"	6.0"	6.0"	6.0"	6.0"	6.0"	5.0"	6.0"	5.0"	5.0"	5.0"	5.0"	5.0"	5.0"
		60	7.0"	7.0"	7.0"	7.0"	7.0"	7.0"	6.0"	6.0"	6.0"	6.0"	6.0"	6.0"	6.0"	6.0"	6.0"	5.0"	5.0"	5.0"	5.0"	5.0"	5.0"	5.0"	5.0"	5.0"	5.0"	5.0"	5.0"
		3/8" MIN EDGE DISTANCE																											
	1/8" STEEL	30	12.0"	12.0"	12.0"	12.0"	12.0"	11.0"	11.0"	11.0"	11.0"	11.0"	10.0"	10.0"	10.0"	10.0"	10.0"	10.0"	9.0"	9.0"	9.0"	9.0"	9.0"	9.0"	9.0"	9.0"	9.0"	9.0"	9.0"
		35	11.0"	11.0"	11.0"	11.0"	10.0"	10.0"	10.0"	10.0"	10.0"	9.0"	9.0"	9.0"	9.0"	9.0"	9.0"	9.0"	8.0"	8.0"	8.0"	8.0"	8.0"	8.0"	8.0"	8.0"	8.0"	8.0"	8.0"
		40	10.0"	10.0"	10.0"	10.0"	9.0"	9.0"	9.0"	9.0"	9.0"	9.0"	8.0"	8.0"	8.0"	8.0"	8.0"	8.0"	8.0"	8.0"	7.0"	7.0"	7.0"	7.0"	7.0"	7.0"	7.0"	7.0"	7.0"
		45	9.0"	9.0"	9.0"	9.0"	9.0"	8.0"	8.0"	8.0"	8.0"	8.0"	8.0"	8.0"	7.0"	7.0"	7.0"	7.0"	7.0"	7.0"	7.0"	7.0"	7.0"	7.0"	7.0"	7.0"	6.0"	6.0"	6.0"
		50	9.0"	8.0"	8.0"	8.0"	8.0"	8.0"	8.0"	7.0"	7.0"	7.0"	7.0"	7.0"	7.0"	7.0"	7.0"	7.0"	6.0"	6.0"	6.0"	6.0"	6.0"	6.0"	6.0"	6.0"	6.0"	6.0"	6.0"
		55	8.0"	8.0"	8.0"	8.0"	7.0"	7.0"	7.0"	7.0"	7.0"	7.0"	7.0"	6.0"	6.0"	6.0"	6.0"	6.0"	6.0"	6.0"	6.0"	6.0"	6.0"	6.0"	6.0"	6.0"	5.0"	5.0"	5.0"
		60	8.0"	7.0"	7.0"	7.0"	7.0"	7.0"	7.0"	6.0"	6.0"	6.0"	6.0"	6.0"	6.0"	6.0"	6.0"	6.0"	6.0"	5.0"	5.0"	5.0"	5.0"	5.0"	5.0"	5.0"	5.0"	5.0"	5.0"

NOTES:
1. APPROVED FOR USE WITH ALL TRACKS

FRANK L. BENNARDO, P.E.
PE# 0046549
10/20/2017
IF CHECKED, CERTIFICATE P.E. APPEARS BELOW
FRANK L. BENNARDO, P.E.
46549

FRANK L. BENNARDO LICENSE No PE0046549 STATE OF FLORIDA PROFESSIONAL ENGINEER

ENGINEERING EXPRESS®
CORPORATE OFFICE:
160 SW 12th AVE, SUITE 106
DEERFIELD BEACH, FL 33442
P: (954) 354-0660 F: (954) 354-0443
E: HELLO@ENGINEERINGEXPRESS.COM
ENGINEERINGEXPRESS.COM
CERT OF AUTH #9885

STORM SMART INDUSTRIES, INC.
6182 IDLEWILD STREET
FORT MYERS , FL
(239) 938-1000

STORM CATCHER WIND ABATEMENT SYSTEM FL11291.2 HVHZ
-
-, FL

REMARKS	DRWN	CHKD	DATE
INIT ISSUE	RWN	FLB	10/18/17

THIS DOCUMENT IS THE PROPERTY OF ENGINEERING EXPRESS, AND SHALL NOT BE REPRODUCED IN WHOLE OR PART WITHOUT WRITTEN CONSENT OF ENGINEERING EXPRESS. ALTERATIONS, ADDITIONS, OR OTHER MARKINGS TO THIS DOCUMENT ARE NOT PERMITTED AND INVALIDATE OUR CERTIFICATION.

COPYRIGHT ENGINEERING EXPRESS ®

16-3080

SCALE: NTS UNLESS NOTED

10/20/2017 3:09pm zachr V:\Projects\16-3080 Storm Catcher Wind Abatement System FL11291.2\RAW\20017.FBC Update\16-3080e-Dwg-11291.2.dwg

¼" ELCO DRIL-FLEX HWH
STRAP BRACKET SPACING

TABLE 26 - ⅛" ALUMINUM & STEEL

ANCHOR TYPE	HOST STRUCT.	LOAD (psf)	SPANS 0' ≤ 3'	SPANS 3' ≤ 3'-6"	SPANS 3'-7" ≤ 3'	SPANS 4' ≤ 4'-6"	SPANS 4'-7" ≤ 5'	SPANS 5' ≤ 5'-6"	SPANS 5'-7" ≤ 6'	SPANS 6' ≤ 6'-6"	SPANS 6'-7" ≤ 7'	SPANS 7' ≤ 7'-6"	SPANS 7'-7" ≤ 8'	SPANS 8' ≤ 8'-6"	SPANS 8'-7" ≤ 9'	SPANS 9' ≤ 9'-6"	SPANS 9'-7" ≤ 10'	SPANS 10' ≤ 10'-6"	SPANS 10'-7" ≤ 11'	SPANS 11' ≤ 11'-6"	SPANS 11'-7" ≤ 12'	SPANS 12' ≤ 12'-6"	SPANS 12'-7" ≤ 13'	SPANS 13' ≤ 13'-6"	SPANS 13'-7" ≤ 14'	SPANS 14' ≤ 14'-6"	SPANS 14'-7" ≤ 15'	SPANS 15' ≤ 15'-6"	SPANS 15'-7" ≤ 16'
			1/2" MIN EDGE DISTANCE																									
1/4"-14 ELCO DRIL-FLEX HWH	1/8" ALUMINUM	30	18.0"	18.0"	18.0"	18.0"	18.0"	18.0"	18.0"	18.0"	18.0"	18.0"	18.0"	18.0"	18.0"	18.0"	18.0"	18.0"	18.0"	18.0"	17.0"	17.0"	16.0"	16.0"	15.0"	15.0"	15.0"	14.0"
		35	18.0"	18.0"	18.0"	18.0"	18.0"	18.0"	18.0"	18.0"	18.0"	18.0"	18.0"	18.0"	18.0"	18.0"	18.0"	17.0"	16.0"	16.0"	15.0"	15.0"	14.0"	14.0"	14.0"	13.0"	13.0"	13.0"
		40	18.0"	18.0"	18.0"	18.0"	18.0"	18.0"	18.0"	18.0"	18.0"	18.0"	18.0"	18.0"	18.0"	17.0"	16.0"	16.0"	15.0"	15.0"	14.0"	14.0"	13.0"	13.0"	13.0"	12.0"	12.0"	12.0"
		45	18.0"	18.0"	18.0"	18.0"	18.0"	18.0"	18.0"	18.0"	18.0"	18.0"	18.0"	17.0"	16.0"	16.0"	15.0"	14.0"	14.0"	13.0"	13.0"	13.0"	12.0"	12.0"	11.0"	11.0"	11.0"	11.0"
		50	18.0"	18.0"	18.0"	18.0"	18.0"	18.0"	18.0"	18.0"	18.0"	17.0"	16.0"	16.0"	15.0"	14.0"	14.0"	13.0"	13.0"	12.0"	12.0"	12.0"	11.0"	11.0"	10.0"	10.0"	10.0"	10.0"
		55	18.0"	18.0"	18.0"	18.0"	18.0"	18.0"	18.0"	18.0"	17.0"	16.0"	15.0"	15.0"	14.0"	13.0"	13.0"	12.0"	12.0"	11.0"	11.0"	11.0"	10.0"	10.0"	10.0"	9.0"	9.0"	9.0"
		60	18.0"	18.0"	18.0"	18.0"	18.0"	18.0"	18.0"	17.0"	16.0"	15.0"	14.0"	14.0"	13.0"	12.0"	12.0"	11.0"	11.0"	11.0"	10.0"	10.0"	10.0"	9.0"	9.0"	9.0"	9.0"	8.0"
		65	18.0"	18.0"	18.0"	18.0"	18.0"	18.0"	17.0"	16.0"	15.0"	14.0"	13.0"	13.0"	12.0"	12.0"	11.0"	11.0"	10.0"	10.0"	10.0"	9.0"	9.0"	9.0"	8.0"	8.0"	8.0"	8.0"
		70	18.0"	18.0"	18.0"	18.0"	18.0"	17.0"	16.0"	15.0"	14.0"	13.0"	13.0"	12.0"	11.0"	11.0"	10.0"	10.0"	10.0"	10.0"	9.0"	9.0"	9.0"	8.0"	8.0"	8.0"	N/A	N/A
		75	18.0"	18.0"	18.0"	18.0"	17.0"	16.0"	15.0"	14.0"	13.0"	13.0"	12.0"	11.0"	11.0"	10.0"	10.0"	10.0"	9.0"	9.0"	9.0"	8.0"	8.0"	8.0"	N/A	N/A	N/A	N/A
		80	18.0"	18.0"	18.0"	18.0"	16.0"	15.0"	14.0"	13.0"	13.0"	12.0"	11.0"	11.0"	10.0"	10.0"	9.0"	9.0"	9.0"	8.0"	8.0"	8.0"	8.0"	N/A	N/A	N/A	N/A	N/A
		85	18.0"	18.0"	18.0"	17.0"	16.0"	15.0"	14.0"	13.0"	12.0"	11.0"	11.0"	10.0"	10.0"	9.0"	9.0"	9.0"	8.0"	8.0"	8.0"	N/A	N/A	N/A	N/A	N/A	N/A	N/A
		90	18.0"	18.0"	18.0"	16.0"	15.0"	14.0"	13.0"	12.0"	11.0"	11.0"	10.0"	10.0"	9.0"	9.0"	9.0"	8.0"	8.0"	8.0"	N/A	N/A	N/A	N/A	N/A	N/A	N/A	N/A
		95	18.0"	18.0"	17.0"	16.0"	14.0"	13.0"	12.0"	12.0"	11.0"	10.0"	10.0"	9.0"	9.0"	8.0"	8.0"	8.0"	N/A	N/A	N/A	N/A	N/A	N/A	N/A	N/A	N/A	N/A
		100	18.0"	18.0"	16.0"	15.0"	14.0"	13.0"	12.0"	11.0"	10.0"	10.0"	9.0"	9.0"	9.0"	8.0"	8.0"	N/A	N/A	N/A	N/A	N/A	N/A	N/A	N/A	N/A	N/A	N/A
		105	18.0"	18.0"	16.0"	14.0"	13.0"	12.0"	11.0"	11.0"	10.0"	10.0"	9.0"	9.0"	8.0"	8.0"	N/A	N/A	N/A	N/A	N/A	N/A	N/A	N/A	N/A	N/A	N/A	N/A
		110	18.0"	17.0"	15.0"	14.0"	13.0"	12.0"	11.0"	10.0"	10.0"	9.0"	9.0"	8.0"	8.0"	N/A	N/A	N/A	N/A	N/A	N/A	N/A	N/A	N/A	N/A	N/A	N/A	N/A
		115	18.0"	16.0"	15.0"	13.0"	12.0"	11.0"	11.0"	10.0"	9.0"	9.0"	8.0"	8.0"	8.0"	N/A	N/A	N/A	N/A	N/A	N/A	N/A	N/A	N/A	N/A	N/A	N/A	N/A
		120	18.0"	16.0"	14.0"	13.0"	12.0"	11.0"	10.0"	10.0"	9.0"	9.0"	8.0"	8.0"	N/A	N/A	N/A	N/A	N/A	N/A	N/A	N/A	N/A	N/A	N/A	N/A	N/A	N/A
		125	17.0"	15.0"	14.0"	13.0"	12.0"	11.0"	10.0"	9.0"	9.0"	8.0"	8.0"	N/A	N/A	N/A	N/A	N/A	N/A	N/A	N/A	N/A	N/A	N/A	N/A	N/A	N/A	N/A
		130	17.0"	15.0"	13.0"	12.0"	11.0"	10.0"	10.0"	9.0"	8.0"	8.0"	8.0"	N/A	N/A	N/A	N/A	N/A	N/A	N/A	N/A	N/A	N/A	N/A	N/A	N/A	N/A	N/A
			3/8" MIN EDGE DISTANCE																									
	16 GA STEEL	30	18.0"	18.0"	18.0"	18.0"	18.0"	18.0"	18.0"	18.0"	18.0"	18.0"	18.0"	18.0"	18.0"	18.0"	18.0"	18.0"	18.0"	18.0"	18.0"	18.0"	18.0"	18.0"	18.0"	18.0"	18.0"	18.0"
		35	18.0"	18.0"	18.0"	18.0"	18.0"	18.0"	18.0"	18.0"	18.0"	18.0"	18.0"	18.0"	18.0"	18.0"	18.0"	18.0"	18.0"	18.0"	18.0"	18.0"	18.0"	18.0"	18.0"	18.0"	18.0"	18.0"
		40	18.0"	18.0"	18.0"	18.0"	18.0"	18.0"	18.0"	18.0"	18.0"	18.0"	18.0"	18.0"	18.0"	18.0"	18.0"	18.0"	18.0"	18.0"	18.0"	18.0"	18.0"	18.0"	18.0"	18.0"	18.0"	17.0"
		45	18.0"	18.0"	18.0"	18.0"	18.0"	18.0"	18.0"	18.0"	18.0"	18.0"	18.0"	18.0"	18.0"	18.0"	18.0"	18.0"	18.0"	18.0"	18.0"	18.0"	18.0"	17.0"	17.0"	16.0"	16.0"	16.0"
		50	18.0"	18.0"	18.0"	18.0"	18.0"	18.0"	18.0"	18.0"	18.0"	18.0"	18.0"	18.0"	18.0"	18.0"	18.0"	18.0"	18.0"	18.0"	18.0"	17.0"	17.0"	16.0"	16.0"	16.0"	15.0"	15.0"
		55	18.0"	18.0"	18.0"	18.0"	18.0"	18.0"	18.0"	18.0"	18.0"	18.0"	18.0"	18.0"	18.0"	18.0"	18.0"	18.0"	18.0"	17.0"	17.0"	16.0"	16.0"	15.0"	15.0"	15.0"	14.0"	14.0"
		60	18.0"	18.0"	18.0"	18.0"	18.0"	18.0"	18.0"	18.0"	18.0"	18.0"	18.0"	18.0"	18.0"	18.0"	18.0"	17.0"	17.0"	16.0"	16.0"	15.0"	15.0"	14.0"	14.0"	14.0"	13.0"	13.0"
		65	18.0"	18.0"	18.0"	18.0"	18.0"	18.0"	18.0"	18.0"	18.0"	18.0"	18.0"	18.0"	18.0"	18.0"	17.0"	16.0"	16.0"	15.0"	15.0"	14.0"	14.0"	13.0"	13.0"	13.0"	12.0"	12.0"
		70	18.0"	18.0"	18.0"	18.0"	18.0"	18.0"	18.0"	18.0"	18.0"	18.0"	18.0"	18.0"	17.0"	17.0"	16.0"	15.0"	15.0"	14.0"	14.0"	14.0"	13.0"	13.0"	12.0"	12.0"	12.0"	11.0"
		75	18.0"	18.0"	18.0"	18.0"	18.0"	18.0"	18.0"	18.0"	18.0"	18.0"	18.0"	17.0"	16.0"	16.0"	15.0"	15.0"	14.0"	14.0"	13.0"	13.0"	12.0"	12.0"	12.0"	11.0"	11.0"	11.0"
		80	18.0"	18.0"	18.0"	18.0"	18.0"	18.0"	18.0"	18.0"	18.0"	18.0"	17.0"	16.0"	16.0"	15.0"	14.0"	14.0"	13.0"	13.0"	13.0"	12.0"	12.0"	12.0"	11.0"	11.0"	10.0"	10.0"
		85	18.0"	18.0"	18.0"	18.0"	18.0"	18.0"	18.0"	18.0"	18.0"	17.0"	16.0"	16.0"	15.0"	14.0"	14.0"	13.0"	13.0"	12.0"	12.0"	12.0"	11.0"	11.0"	11.0"	10.0"	10.0"	10.0"
		90	18.0"	18.0"	18.0"	18.0"	18.0"	18.0"	18.0"	18.0"	17.0"	16.0"	16.0"	15.0"	14.0"	14.0"	13.0"	13.0"	12.0"	12.0"	12.0"	11.0"	11.0"	10.0"	10.0"	10.0"	9.0"	9.0"
		95	18.0"	18.0"	18.0"	18.0"	18.0"	18.0"	18.0"	18.0"	17.0"	16.0"	15.0"	14.0"	14.0"	13.0"	13.0"	12.0"	12.0"	11.0"	11.0"	11.0"	10.0"	10.0"	10.0"	9.0"	9.0"	9.0"
		100	18.0"	18.0"	18.0"	18.0"	18.0"	18.0"	18.0"	17.0"	16.0"	15.0"	14.0"	14.0"	13.0"	13.0"	12.0"	12.0"	11.0"	11.0"	11.0"	10.0"	10.0"	10.0"	9.0"	9.0"	9.0"	9.0"
		105	18.0"	18.0"	18.0"	18.0"	18.0"	18.0"	17.0"	16.0"	15.0"	15.0"	14.0"	13.0"	13.0"	12.0"	12.0"	11.0"	11.0"	11.0"	10.0"	10.0"	10.0"	9.0"	9.0"	9.0"	9.0"	8.0"
		110	18.0"	18.0"	18.0"	18.0"	18.0"	18.0"	17.0"	16.0"	15.0"	14.0"	13.0"	13.0"	12.0"	12.0"	11.0"	11.0"	11.0"	10.0"	10.0"	10.0"	9.0"	9.0"	9.0"	8.0"	8.0"	8.0"
		115	18.0"	18.0"	18.0"	18.0"	18.0"	17.0"	16.0"	15.0"	14.0"	14.0"	13.0"	12.0"	12.0"	11.0"	11.0"	11.0"	10.0"	10.0"	10.0"	9.0"	9.0"	9.0"	8.0"	8.0"	8.0"	8.0"
		120	18.0"	18.0"	18.0"	18.0"	18.0"	17.0"	16.0"	15.0"	14.0"	13.0"	13.0"	12.0"	12.0"	11.0"	11.0"	10.0"	10.0"	10.0"	9.0"	9.0"	9.0"	8.0"	8.0"	8.0"	8.0"	N/A
		125	18.0"	18.0"	18.0"	18.0"	17.0"	16.0"	15.0"	14.0"	14.0"	13.0"	12.0"	12.0"	11.0"	11.0"	10.0"	10.0"	10.0"	9.0"	9.0"	9.0"	8.0"	8.0"	8.0"	8.0"	N/A	N/A
		130	18.0"	18.0"	18.0"	18.0"	17.0"	16.0"	15.0"	14.0"	13.0"	12.0"	12.0"	11.0"	11.0"	10.0"	10.0"	10.0"	9.0"	9.0"	9.0"	8.0"	8.0"	8.0"	8.0"	N/A	N/A	N/A

ANCHOR TYPE	HOST STRUCT.	LOAD (psf)	SPANS 16' ≤ 16'-6"	SPANS 16'-7" ≤ 17'	SPANS 17' ≤ 17'-6"	SPANS 17'-7" ≤ 18'	SPANS 18' ≤ 18'-6"	SPANS 18'-7" ≤ 19'	SPANS 19' ≤ 19'-6"	SPANS 19'-7" ≤ 20'	SPANS 20' ≤ 20'-6"	SPANS 20'-7" ≤ 21'	SPANS 21' ≤ 21'-6"	SPANS 21'-7" ≤ 22'	SPANS 22' ≤ 22'-6"	SPANS 22'-7" ≤ 23'	SPANS 23' ≤ 23'-6"	SPANS 23'-7" ≤ 24'	SPANS 24' ≤ 24'-6"	SPANS 24'-7" ≤ 25'	SPANS 25' ≤ 25'-6"	SPANS 25'-7" ≤ 26'	SPANS 26' ≤ 26'-6"	SPANS 26'-7" ≤ 27'	SPANS 27' ≤ 27'-6"	SPANS 27'-7" ≤ 28'	SPANS 28' ≤ 28'-6"	SPANS 28'-7" ≤ 29'	SPANS 29' ≤ 29'-6"	SPANS 29'-7" ≤ 30'
			1/2" MIN EDGE DISTANCE																										
1/4"-14 ELCO DRIL-FLEX HWH	1/8" ALUMINUM	30	14.0"	14.0"	13.0"	13.0"	13.0"	12.0"	12.0"	12.0"	12.0"	11.0"	11.0"	11.0"	11.0"	11.0"	10.0"	10.0"	10.0"	10.0"	10.0"	10.0"	10.0"	9.0"	9.0"	9.0"	9.0"	9.0"	9.0"
		35	12.0"	12.0"	12.0"	11.0"	11.0"	11.0"	11.0"	10.0"	10.0"	10.0"	10.0"	10.0"	10.0"	9.0"	9.0"	9.0"	9.0"	9.0"	9.0"	8.0"	9.0"	8.0"	8.0"	8.0"	8.0"	8.0"	8.0"
		40	11.0"	11.0"	10.0"	10.0"	10.0"	10.0"	10.0"	9.0"	9.0"	9.0"	9.0"	9.0"	9.0"	8.0"	8.0"	8.0"	8.0"	8.0"	8.0"	8.0"	8.0"	N/A	N/A	N/A	N/A	N/A	N/A
		45	10.0"	10.0"	10.0"	9.0"	9.0"	9.0"	9.0"	8.0"	8.0"	8.0"	8.0"	8.0"	8.0"	8.0"	N/A	N/A	N/A	N/A	N/A	N/A	N/A	N/A	N/A	N/A	N/A	N/A	N/A
		50	9.0"	9.0"	9.0"	8.0"	8.0"	8.0"	8.0"	8.0"	8.0"	N/A	N/A	N/A	N/A	N/A	N/A	N/A	N/A	N/A	N/A	N/A	N/A	N/A	N/A	N/A	N/A	N/A	N/A
		55	8.0"	8.0"	8.0"	8.0"	8.0"	N/A	N/A	N/A	N/A	N/A	N/A	N/A	N/A	N/A	N/A	N/A	N/A	N/A	N/A	N/A	N/A	N/A	N/A	N/A	N/A	N/A	N/A
		60	8.0"	8.0"	N/A	N/A	N/A	N/A	N/A	N/A	N/A	N/A	N/A	N/A	N/A	N/A	N/A	N/A	N/A	N/A	N/A	N/A	N/A	N/A	N/A	N/A	N/A	N/A	N/A
			3/8" MIN EDGE DISTANCE																										
	16 GA STEEL	30	18.0"	18.0"	18.0"	18.0"	18.0"	18.0"	18.0"	18.0"	18.0"	17.0"	17.0"	17.0"	16.0"	16.0"	16.0"	16.0"	15.0"	15.0"	15.0"	15.0"	15.0"	15.0"	15.0"	15.0"	14.0"	14.0"	14.0"	14.0"
		35	18.0"	18.0"	18.0"	17.0"	17.0"	17.0"	16.0"	16.0"	16.0"	15.0"	15.0"	15.0"	15.0"	14.0"	14.0"	14.0"	14.0"	14.0"	13.0"	13.0"	13.0"	13.0"	13.0"	13.0"	13.0"	13.0"	12.0"
		40	17.0"	16.0"	16.0"	16.0"	15.0"	15.0"	15.0"	14.0"	14.0"	14.0"	14.0"	13.0"	13.0"	13.0"	13.0"	13.0"	12.0"	12.0"	12.0"	12.0"	12.0"	12.0"	12.0"	12.0"	12.0"	11.0"	11.0"
		45	15.0"	15.0"	15.0"	14.0"	14.0"	14.0"	13.0"	13.0"	13.0"	13.0"	13.0"	12.0"	12.0"	12.0"	12.0"	12.0"	11.0"	11.0"	11.0"	11.0"	11.0"	11.0"	11.0"	11.0"	11.0"	10.0"	10.0"
		50	14.0"	14.0"	14.0"	13.0"	13.0"	13.0"	12.0"	12.0"	12.0"	12.0"	12.0"	11.0"	11.0"	11.0"	11.0"	11.0"	10.0"	10.0"	10.0"	10.0"	10.0"	10.0"	10.0"	10.0"	10.0"	9.0"	9.0"
		55	13.0"	13.0"	13.0"	12.0"	12.0"	12.0"	12.0"	11.0"	11.0"	11.0"	11.0"	11.0"	10.0"	10.0"	10.0"	10.0"	10.0"	10.0"	10.0"	9.0"	9.0"	9.0"	9.0"	9.0"	9.0"	9.0"	9.0"
		60	12.0"	12.0"	12.0"	11.0"	11.0"	11.0"	11.0"	11.0"	10.0"	10.0"	10.0"	10.0"	10.0"	10.0"	10.0"	10.0"	9.0"	9.0"	9.0"	9.0"	9.0"	9.0"	9.0"	8.0"	8.0"	8.0"	8.0"	8.0"

NOTES:
1. THE SPACING ON THIS CHART APPLIES ONLY TO THE INSTALLATION OF STRAP BRACKETS.

FRANK L. BENNARDO, P.E.
PE# 0046549
10/20/2017
IF CHECKED, CERTIFIED PE AWARDS SEAL ON
FRANK L. BENNARDO, P.E.
46549

FRANK L. BENNARDO
LICENSE
No PE0046549
STATE OF FLORIDA
PROFESSIONAL ENGINEER

ENGINEERING EXPRESS®
CORPORATE OFFICE:
160 SW 12th AVE, SUITE 106
DEERFIELD BEACH, FL 33442
P: (954) 354-0660 F: (954) 354-0443
E: HELLO@ENGINEERINGEXPRESS.COM
ENGINEERINGEXPRESS.COM
CERT OF AUTH #9885

STORM SMART INDUSTRIES, INC.
6182 IDLEWILD STREET
FORT MYERS , FL
(239) 938-1000

STORM CATCHER WIND ABATEMENT SYSTEM FL11291.2 HVHZ
-
-, FL

REMARKS	DRWN	CHKD	DATE
INIT ISSUE	RWN	FLB	10/18/17

THIS DOCUMENT IS THE PROPERTY OF ENGINEERING EXPRESS, AND SHALL NOT BE REPRODUCED IN WHOLE OR PART WITHOUT WRITTEN CONSENT OF ENGINEERING EXPRESS. ALTERATIONS, ADDITIONS, OR OTHER MARKINGS TO THIS DOCUMENT ARE NOT PERMITTED AND INVALIDATE OUR CERTIFICATION.

COPYRIGHT ENGINEERING EXPRESS ®

16-3080

SCALE: NTS UNLESS NOTED

10/20/2017 - 3:09pm zachr V:\Projects\16-3080 Storm Catcher Wind Abatement System FL11291-R4\WP\2017 FBC Update\16-3080e-Dwg-112912.dwg

¼" ELCO DRIL-FLEX HWH
STRAP BRACKET SPACING

TABLE 27 - ¼" ALUMINUM & STEEL

ANCHOR TYPE	HOST STRUCT.	LOAD (psf)	SPANS 0" ≤ 3'	SPANS 3' ≤ 3'-6"	SPANS 3'-7" ≤ 4'	SPANS 4' ≤ 4'-6"	SPANS 4'-7" ≤ 5'	SPANS 5' ≤ 5'-6"	SPANS 5'-7" ≤ 6'	SPANS 6' ≤ 6'-6"	SPANS 6'-7" ≤ 7'	SPANS 7' ≤ 7'-6"	SPANS 7'-7" ≤ 8'	SPANS 8' ≤ 8'-6"	SPANS 8'-7" ≤ 9'	SPANS 9' ≤ 9'-6"	SPANS 9'-7" ≤ 10'	SPANS 10' ≤ 10'-6"	SPANS 10'-7" ≤ 11'	SPANS 11' ≤ 11'-6"	SPANS 11'-7" ≤ 12'	SPANS 12' ≤ 12'-6"	SPANS 12'-7" ≤ 13'	SPANS 13' ≤ 13'-6"	SPANS 13'-7" ≤ 14'	SPANS 14' ≤ 14'-6"	SPANS 14'-7" ≤ 15'	SPANS 15' ≤ 15'-6"	SPANS 15'-16" ≤ 16'
			1/2" MIN EDGE DISTANCE																										
1/4"-14 ELCO DRIL-FLEX HWH	1/4" ALUMINUM	30	18.0"	18.0"	18.0"	18.0"	18.0"	18.0"	18.0"	18.0"	18.0"	18.0"	18.0"	18.0"	18.0"	18.0"	18.0"	18.0"	18.0"	18.0"	18.0"	18.0"	18.0"	18.0"	18.0"	18.0"	18.0"	18.0"	18.0"
		35	18.0"	18.0"	18.0"	18.0"	18.0"	18.0"	18.0"	18.0"	18.0"	18.0"	18.0"	18.0"	18.0"	18.0"	18.0"	18.0"	18.0"	18.0"	18.0"	18.0"	18.0"	18.0"	18.0"	18.0"	18.0"	18.0"	18.0"
		40	18.0"	18.0"	18.0"	18.0"	18.0"	18.0"	18.0"	18.0"	18.0"	18.0"	18.0"	18.0"	18.0"	18.0"	18.0"	18.0"	18.0"	18.0"	18.0"	18.0"	18.0"	18.0"	18.0"	18.0"	18.0"	18.0"	18.0"
		45	18.0"	18.0"	18.0"	18.0"	18.0"	18.0"	18.0"	18.0"	18.0"	18.0"	18.0"	18.0"	18.0"	18.0"	18.0"	18.0"	18.0"	18.0"	18.0"	18.0"	18.0"	18.0"	18.0"	18.0"	18.0"	18.0"	17.0"
		50	18.0"	18.0"	18.0"	18.0"	18.0"	18.0"	18.0"	18.0"	18.0"	18.0"	18.0"	18.0"	18.0"	18.0"	18.0"	18.0"	18.0"	18.0"	18.0"	18.0"	18.0"	18.0"	17.0"	17.0"	17.0"	16.0"	16.0"
		55	18.0"	18.0"	18.0"	18.0"	18.0"	18.0"	18.0"	18.0"	18.0"	18.0"	18.0"	18.0"	18.0"	18.0"	18.0"	18.0"	18.0"	18.0"	18.0"	17.0"	17.0"	16.0"	16.0"	16.0"	15.0"	15.0"	15.0"
		60	18.0"	18.0"	18.0"	18.0"	18.0"	18.0"	18.0"	18.0"	18.0"	18.0"	18.0"	18.0"	18.0"	18.0"	18.0"	18.0"	18.0"	17.0"	17.0"	16.0"	16.0"	15.0"	15.0"	15.0"	14.0"	14.0"	14.0"
		65	18.0"	18.0"	18.0"	18.0"	18.0"	18.0"	18.0"	18.0"	18.0"	18.0"	18.0"	18.0"	18.0"	17.0"	17.0"	16.0"	16.0"	15.0"	15.0"	14.0"	14.0"	13.0"	13.0"	13.0"	12.0"	12.0"	12.0"
		70	18.0"	18.0"	18.0"	18.0"	18.0"	18.0"	18.0"	18.0"	18.0"	18.0"	18.0"	18.0"	17.0"	16.0"	16.0"	15.0"	15.0"	14.0"	14.0"	13.0"	13.0"	13.0"	12.0"	12.0"	12.0"	11.0"	11.0"
		75	18.0"	18.0"	18.0"	18.0"	18.0"	18.0"	18.0"	18.0"	18.0"	18.0"	18.0"	17.0"	16.0"	16.0"	15.0"	15.0"	14.0"	14.0"	13.0"	13.0"	12.0"	12.0"	12.0"	11.0"	11.0"	11.0"	10.0"
		80	18.0"	18.0"	18.0"	18.0"	18.0"	18.0"	18.0"	18.0"	18.0"	18.0"	17.0"	16.0"	16.0"	15.0"	14.0"	14.0"	13.0"	13.0"	12.0"	12.0"	12.0"	11.0"	11.0"	11.0"	10.0"	10.0"	10.0"
		85	18.0"	18.0"	18.0"	18.0"	18.0"	18.0"	18.0"	18.0"	18.0"	17.0"	16.0"	15.0"	15.0"	14.0"	14.0"	13.0"	13.0"	12.0"	12.0"	12.0"	11.0"	11.0"	11.0"	10.0"	10.0"	10.0"	10.0"
		90	18.0"	18.0"	18.0"	18.0"	18.0"	18.0"	18.0"	18.0"	17.0"	16.0"	16.0"	15.0"	14.0"	14.0"	13.0"	13.0"	12.0"	12.0"	11.0"	11.0"	11.0"	10.0"	10.0"	10.0"	10.0"	9.0"	9.0"
		95	18.0"	18.0"	18.0"	18.0"	18.0"	18.0"	18.0"	17.0"	16.0"	16.0"	15.0"	14.0"	14.0"	13.0"	13.0"	12.0"	12.0"	11.0"	11.0"	11.0"	10.0"	10.0"	10.0"	9.0"	9.0"	9.0"	9.0"
		100	18.0"	18.0"	18.0"	18.0"	18.0"	18.0"	17.0"	16.0"	15.0"	14.0"	14.0"	13.0"	12.0"	12.0"	11.0"	11.0"	11.0"	10.0"	10.0"	10.0"	10.0"	9.0"	9.0"	9.0"	9.0"	8.0"	8.0"
		105	18.0"	18.0"	18.0"	18.0"	18.0"	17.0"	16.0"	15.0"	14.0"	14.0"	13.0"	13.0"	12.0"	11.0"	11.0"	11.0"	10.0"	10.0"	10.0"	9.0"	9.0"	9.0"	8.0"	8.0"	8.0"	8.0"	8.0"
		110	18.0"	18.0"	18.0"	18.0"	18.0"	17.0"	16.0"	15.0"	14.0"	13.0"	13.0"	12.0"	12.0"	11.0"	11.0"	10.0"	10.0"	10.0"	9.0"	9.0"	9.0"	8.0"	8.0"	8.0"	8.0"	8.0"	N/A
		115	18.0"	18.0"	18.0"	18.0"	17.0"	16.0"	15.0"	14.0"	14.0"	13.0"	12.0"	12.0"	11.0"	11.0"	10.0"	10.0"	10.0"	9.0"	9.0"	9.0"	8.0"	8.0"	8.0"	8.0"	N/A	N/A	N/A
		120	18.0"	18.0"	17.0"	17.0"	17.0"	16.0"	15.0"	14.0"	13.0"	12.0"	12.0"	11.0"	11.0"	10.0"	10.0"	10.0"	9.0"	9.0"	9.0"	8.0"	8.0"	8.0"	8.0"	N/A	N/A	N/A	N/A
		125	17.0"	17.0"	17.0"	17.0"	16.0"	15.0"	14.0"	13.0"	13.0"	12.0"	11.0"	11.0"	10.0"	10.0"	10.0"	9.0"	9.0"	9.0"	8.0"	8.0"	8.0"	8.0"	N/A	N/A	N/A	N/A	N/A
		130	17.0"	17.0"	17.0"	17.0"	16.0"	15.0"	14.0"	13.0"	12.0"	12.0"	11.0"	11.0"	10.0"	10.0"	9.0"	9.0"	9.0"	8.0"	8.0"	8.0"	8.0"	N/A	N/A	N/A	N/A	N/A	N/A
			3/8" MIN EDGE DISTANCE																										
	1/8" STEEL	30	18.0"	18.0"	18.0"	18.0"	18.0"	18.0"	18.0"	18.0"	18.0"	18.0"	18.0"	18.0"	18.0"	18.0"	18.0"	18.0"	18.0"	18.0"	18.0"	18.0"	18.0"	18.0"	18.0"	18.0"	18.0"	18.0"	18.0"
		35	18.0"	18.0"	18.0"	18.0"	18.0"	18.0"	18.0"	18.0"	18.0"	18.0"	18.0"	18.0"	18.0"	18.0"	18.0"	18.0"	18.0"	18.0"	18.0"	18.0"	18.0"	18.0"	18.0"	18.0"	18.0"	18.0"	18.0"
		40	18.0"	18.0"	18.0"	18.0"	18.0"	18.0"	18.0"	18.0"	18.0"	18.0"	18.0"	18.0"	18.0"	18.0"	18.0"	18.0"	18.0"	18.0"	18.0"	18.0"	18.0"	18.0"	18.0"	18.0"	18.0"	18.0"	18.0"
		45	18.0"	18.0"	18.0"	18.0"	18.0"	18.0"	18.0"	18.0"	18.0"	18.0"	18.0"	18.0"	18.0"	18.0"	18.0"	18.0"	18.0"	18.0"	18.0"	18.0"	18.0"	18.0"	18.0"	18.0"	18.0"	18.0"	18.0"
		50	18.0"	18.0"	18.0"	18.0"	18.0"	18.0"	18.0"	18.0"	18.0"	18.0"	18.0"	18.0"	18.0"	18.0"	18.0"	18.0"	18.0"	18.0"	18.0"	18.0"	18.0"	18.0"	18.0"	17.0"	17.0"	17.0"	16.0"
		55	18.0"	18.0"	18.0"	18.0"	18.0"	18.0"	18.0"	18.0"	18.0"	18.0"	18.0"	18.0"	18.0"	18.0"	18.0"	18.0"	18.0"	18.0"	18.0"	18.0"	17.0"	17.0"	16.0"	16.0"	16.0"	16.0"	15.0"
		60	18.0"	18.0"	18.0"	18.0"	18.0"	18.0"	18.0"	18.0"	18.0"	18.0"	18.0"	18.0"	18.0"	18.0"	18.0"	18.0"	18.0"	18.0"	18.0"	17.0"	17.0"	16.0"	16.0"	15.0"	15.0"	15.0"	14.0"
		65	18.0"	18.0"	18.0"	18.0"	18.0"	18.0"	18.0"	18.0"	18.0"	18.0"	18.0"	18.0"	18.0"	18.0"	17.0"	16.0"	16.0"	15.0"	15.0"	15.0"	14.0"	14.0"	13.0"	13.0"	13.0"	12.0"	12.0"
		70	18.0"	18.0"	18.0"	18.0"	18.0"	18.0"	18.0"	18.0"	18.0"	18.0"	18.0"	18.0"	17.0"	17.0"	16.0"	16.0"	15.0"	15.0"	14.0"	14.0"	13.0"	13.0"	13.0"	12.0"	12.0"	12.0"	11.0"
		75	18.0"	18.0"	18.0"	18.0"	18.0"	18.0"	18.0"	18.0"	18.0"	18.0"	18.0"	17.0"	17.0"	16.0"	15.0"	15.0"	14.0"	14.0"	13.0"	13.0"	13.0"	12.0"	12.0"	12.0"	11.0"	11.0"	11.0"
		80	18.0"	18.0"	18.0"	18.0"	18.0"	18.0"	18.0"	18.0"	18.0"	18.0"	17.0"	17.0"	16.0"	15.0"	15.0"	14.0"	14.0"	13.0"	13.0"	12.0"	12.0"	12.0"	11.0"	11.0"	11.0"	11.0"	10.0"
		85	18.0"	18.0"	18.0"	18.0"	18.0"	18.0"	18.0"	18.0"	18.0"	17.0"	17.0"	16.0"	15.0"	15.0"	14.0"	14.0"	13.0"	13.0"	12.0"	12.0"	12.0"	11.0"	11.0"	11.0"	10.0"	10.0"	10.0"
		90	18.0"	18.0"	18.0"	18.0"	18.0"	18.0"	18.0"	18.0"	17.0"	17.0"	16.0"	15.0"	15.0"	14.0"	13.0"	13.0"	12.0"	12.0"	11.0"	11.0"	11.0"	10.0"	10.0"	10.0"	10.0"	9.0"	9.0"
		95	18.0"	18.0"	18.0"	18.0"	18.0"	18.0"	18.0"	18.0"	17.0"	16.0"	15.0"	15.0"	14.0"	13.0"	13.0"	12.0"	12.0"	12.0"	11.0"	11.0"	11.0"	10.0"	10.0"	10.0"	10.0"	9.0"	9.0"
		100	18.0"	18.0"	18.0"	18.0"	18.0"	18.0"	17.0"	16.0"	15.0"	15.0"	14.0"	13.0"	13.0"	12.0"	12.0"	11.0"	11.0"	11.0"	10.0"	10.0"	10.0"	9.0"	9.0"	9.0"	9.0"	9.0"	8.0"
		105	18.0"	18.0"	18.0"	18.0"	18.0"	18.0"	17.0"	16.0"	15.0"	14.0"	13.0"	13.0"	12.0"	12.0"	11.0"	11.0"	11.0"	10.0"	10.0"	10.0"	9.0"	9.0"	9.0"	9.0"	8.0"	8.0"	8.0"
		110	18.0"	18.0"	18.0"	18.0"	18.0"	17.0"	16.0"	15.0"	14.0"	14.0"	13.0"	12.0"	12.0"	11.0"	11.0"	11.0"	10.0"	10.0"	10.0"	9.0"	9.0"	9.0"	9.0"	8.0"	8.0"	8.0"	8.0"
		115	18.0"	18.0"	18.0"	18.0"	18.0"	17.0"	16.0"	15.0"	14.0"	13.0"	13.0"	12.0"	11.0"	11.0"	11.0"	10.0"	10.0"	10.0"	9.0"	9.0"	9.0"	8.0"	8.0"	8.0"	8.0"	8.0"	7.0"
		120	18.0"	18.0"	18.0"	18.0"	17.0"	16.0"	15.0"	14.0"	13.0"	13.0"	12.0"	12.0"	11.0"	11.0"	10.0"	10.0"	10.0"	9.0"	9.0"	9.0"	8.0"	8.0"	8.0"	8.0"	8.0"	7.0"	7.0"
		125	18.0"	18.0"	18.0"	18.0"	17.0"	16.0"	15.0"	14.0"	13.0"	12.0"	12.0"	11.0"	11.0"	10.0"	10.0"	10.0"	9.0"	9.0"	9.0"	8.0"	8.0"	8.0"	8.0"	8.0"	7.0"	7.0"	7.0"
		130	18.0"	18.0"	18.0"	17.0"	16.0"	15.0"	14.0"	13.0"	13.0"	12.0"	11.0"	11.0"	10.0"	10.0"	10.0"	9.0"	9.0"	9.0"	8.0"	8.0"	8.0"	8.0"	7.0"	7.0"	7.0"	7.0"	7.0"

ANCHOR TYPE	HOST STRUCT.	LOAD (psf)	SPANS 16' ≤ 16'-6"	SPANS 16'-7" ≤ 17'	SPANS 17' ≤ 17'-6"	SPANS 17'-7" ≤ 18'	SPANS 18' ≤ 18'-6"	SPANS 18'-7" ≤ 19'	SPANS 19' ≤ 19'-6"	SPANS 19'-7" ≤ 20'	SPANS 20' ≤ 20'-6"	SPANS 20'-7" ≤ 21'	SPANS 21' ≤ 21'-6"	SPANS 21'-7" ≤ 22'	SPANS 22' ≤ 22'-6"	SPANS 22'-7" ≤ 23'	SPANS 23' ≤ 23'-6"	SPANS 23'-7" ≤ 24'	SPANS 24' ≤ 24'-6"	SPANS 24'-7" ≤ 25'	SPANS 25' ≤ 25'-6"	SPANS 25'-7" ≤ 26'	SPANS 26' ≤ 26'-6"	SPANS 26'-7" ≤ 27'	SPANS 27' ≤ 27'-6"	SPANS 27'-7" ≤ 28'	SPANS 28' ≤ 28'-6"	SPANS 28'-7" ≤ 29'	SPANS 29' ≤ 29'-6"	SPANS 29'-7" ≤ 30'
			1/2" MIN EDGE DISTANCE																										
1/4"-14 ELCO DRIL-FLEX HWH	1/4" ALUMINUM	30	18.0"	18.0"	18.0"	18.0"	18.0"	18.0"	18.0"	18.0"	18.0"	18.0"	18.0"	18.0"	18.0"	18.0"	18.0"	17.0"	17.0"	17.0"	17.0"	16.0"	17.0"	16.0"	16.0"	16.0"	16.0"	16.0"	15.0"
		35	18.0"	18.0"	18.0"	18.0"	18.0"	18.0"	18.0"	18.0"	17.0"	17.0"	17.0"	16.0"	16.0"	16.0"	16.0"	15.0"	15.0"	15.0"	15.0"	15.0"	15.0"	15.0"	14.0"	14.0"	14.0"	14.0"	14.0"
		40	18.0"	18.0"	18.0"	17.0"	17.0"	17.0"	16.0"	16.0"	16.0"	15.0"	15.0"	15.0"	15.0"	14.0"	14.0"	14.0"	14.0"	13.0"	13.0"	13.0"	13.0"	13.0"	13.0"	13.0"	13.0"	12.0"	12.0"
		45	17.0"	17.0"	16.0"	16.0"	15.0"	15.0"	15.0"	15.0"	14.0"	14.0"	14.0"	14.0"	13.0"	13.0"	13.0"	13.0"	13.0"	12.0"	12.0"	12.0"	12.0"	12.0"	12.0"	12.0"	11.0"	11.0"	11.0"
		50	16.0"	15.0"	15.0"	15.0"	14.0"	14.0"	14.0"	13.0"	13.0"	13.0"	13.0"	13.0"	12.0"	12.0"	12.0"	12.0"	12.0"	11.0"	11.0"	11.0"	11.0"	11.0"	11.0"	11.0"	11.0"	10.0"	10.0"
		55	15.0"	14.0"	14.0"	14.0"	13.0"	13.0"	13.0"	13.0"	12.0"	12.0"	12.0"	12.0"	11.0"	11.0"	11.0"	11.0"	11.0"	11.0"	10.0"	10.0"	10.0"	10.0"	10.0"	10.0"	10.0"	10.0"	10.0"
		60	14.0"	13.0"	13.0"	13.0"	12.0"	12.0"	12.0"	12.0"	11.0"	11.0"	11.0"	11.0"	11.0"	10.0"	10.0"	10.0"	10.0"	10.0"	10.0"	10.0"	10.0"	9.0"	9.0"	9.0"	9.0"	9.0"	9.0"
			3/8" MIN EDGE DISTANCE																										
	1/8" STEEL	30	18.0"	18.0"	18.0"	18.0"	18.0"	18.0"	18.0"	18.0"	18.0"	18.0"	18.0"	18.0"	18.0"	18.0"	18.0"	18.0"	17.0"	17.0"	17.0"	17.0"	17.0"	17.0"	17.0"	17.0"	16.0"	16.0"	16.0"
		35	18.0"	18.0"	18.0"	18.0"	18.0"	18.0"	18.0"	18.0"	18.0"	17.0"	17.0"	17.0"	17.0"	16.0"	16.0"	16.0"	16.0"	15.0"	15.0"	15.0"	15.0"	15.0"	15.0"	15.0"	14.0"	14.0"	14.0"
		40	18.0"	18.0"	18.0"	18.0"	17.0"	17.0"	17.0"	16.0"	16.0"	16.0"	15.0"	15.0"	15.0"	15.0"	15.0"	14.0"	14.0"	14.0"	14.0"	14.0"	14.0"	14.0"	13.0"	13.0"	13.0"	13.0"	13.0"
		45	17.0"	17.0"	17.0"	16.0"	16.0"	16.0"	15.0"	15.0"	15.0"	14.0"	14.0"	14.0"	14.0"	14.0"	13.0"	13.0"	13.0"	13.0"	12.0"	13.0"	12.0"	12.0"	12.0"	12.0"	12.0"	12.0"	12.0"
		50	16.0"	16.0"	15.0"	15.0"	15.0"	14.0"	14.0"	14.0"	14.0"	13.0"	13.0"	13.0"	13.0"	13.0"	12.0"	12.0"	12.0"	12.0"	12.0"	11.0"	12.0"	12.0"	11.0"	11.0"	11.0"	11.0"	11.0"
		55	15.0"	15.0"	14.0"	14.0"	14.0"	13.0"	13.0"	13.0"	13.0"	12.0"	12.0"	12.0"	12.0"	12.0"	11.0"	11.0"	11.0"	11.0"	11.0"	11.0"	11.0"	11.0"	10.0"	10.0"	10.0"	10.0"	10.0"
		60	14.0"	14.0"	13.0"	13.0"	13.0"	13.0"	12.0"	12.0"	12.0"	12.0"	11.0"	11.0"	11.0"	11.0"	11.0"	11.0"	10.0"	10.0"	10.0"	10.0"	10.0"	10.0"	10.0"	10.0"	10.0"	10.0"	9.0"

NOTES:
1. THE SPACING ON THIS CHART APPLIES ONLY TO THE INSTALLATION OF STRAP BRACKETS.

FRANK L. BENNARDO, P.E.
PE#:0046549
LICENSE
10/20/2017
FRANK L. BENNARDO, P.E.
46549
STATE OF FLORIDA
PROFESSIONAL ENGINEER

ENGINEERING EXPRESS®
CORPORATE OFFICE:
160 SW 12th AVE, SUITE 106
DEERFIELD BEACH, FL 33442
P: (954) 354-0660 F: (954) 354-0443
E: HELLO@ENGINEERINGEXPRESS.COM
ENGINEERINGEXPRESS.COM
CERT OF AUTH #9885

STORM SMART INDUSTRIES, INC.
6182 IDLEWILD STREET
FORT MYERS , FL
(239) 938-1000

STORM CATCHER WIND ABATEMENT SYSTEM FL11291.2 HVHZ
-
-, FL

REMARKS	DRWN	CHKD	DATE
INIT ISSUE	RWN	FLB	10/18/17

THIS DOCUMENT IS THE PROPERTY OF ENGINEERING EXPRESS, AND SHALL NOT BE REPRODUCED IN WHOLE OR PART WITHOUT WRITTEN CONSENT OF ENGINEERING EXPRESS. ALTERATIONS, ADDITIONS, OR OTHER MARKINGS TO THIS DOCUMENT ARE NOT PERMITTED AND INVALIDATE OUR CERTIFICATION.

COPYRIGHT ENGINEERING EXPRESS®

16-3080

SCALE: NTS UNLESS NOTED

10/20/2017 - 3:09pm zachr V:\Projects\16-3080 Storm Catcher Wind Abatement System FL11291-R4\WP\2017 FBC Update\16-3080e-Dwg-11291.2.dwg