KAWNEER TRIFAB 451UT CENTER - TALL SILL

GENERAL NOTES

1. THIS STOREFRONT SYSTEM HAS BEEN TESTED TO ASTM E283, ASTM E330, ASTM E331, ASTM E547, AND AAMA 501, AND MEETS THE REQUIREMENTS OF THE FLORIDA BUILDING CODE (FBC), CURRENT EDITION, OUTSIDE THE HIGH VELOCITY HURRICANE ZONE. PRODUCT WAS TESTED WITH AND WITHOUT INTERIOR PERIMETER SEAL, BY OTHERS. WITHOUT INTERIOR PERIMETER SEAL, PRODUCT PASSED AIR INFILTRATION TESTING AT 1.56 PSF AND WATER PENETRATION RESISTANCE TEST OF 10.44 PSF. WITH INTERIOR PERIMETER SEAL, PRODUCT PASSED AIR INFILTRATION TESTING AT 6.24 PSF AND WATER PENETRATION RESISTANCE TEST OF 12 PSF.
2. A FLORIDA LICENSED ENGINEER FAMILIAR WITH STOREFRONT DESIGN SHALL APPROVE SHOP DRAWINGS FOR EACH PROJECT, AND THIS ENGINEER OF RECORD SHALL TAKE FULL RESPONSIBILITY FOR THE INSTALLED SYSTEM DESIGN AS A WHOLE WHILE MAKING SURE THAT THE LIMITATIONS INDICATED IN THIS DRAWING HAVE NOT BEEN EXCEEDED. THE INSTALLED STOREFRONT SYSTEM SHALL BE FABRICATED, GLAZED, AND ANCHORED IN ACCORDANCE WITH THIS DRAWING AND KAWNEER INSTALLATION INSTRUCTIONS, AS WELL AS THE APPLICABLE TEST REPORTS, OR AS INDICATED BY THE ENGINEER OF RECORD IN APPROVED SHOP DRAWINGS.
3. THIS DRAWING INDICATES VARIOUS APPROVED GLAZING METHODS AND FRAMING TYPES WHICH MAY BE USED SINGLY OR IN COMBINATION FOR EACH PROJECT. ANY NUMBER OF PANELS MAY BE USED HORIZONTALLY PROVIDED THE MAXIMUM DLO SIZES AS INDICATED IN THIS DRAWING ARE NOT EXCEEDED.
4. THIS PRODUCT IS NON-IMPACT AND REQUIRES THE USE OF APPROVED SHUTTERS IN WINDBORNE DEBRIS AREAS.
5. REQUIRED DESIGN PRESSURES SHALL BE DETERMINED FOR EACH PROJECT IN ACCORDANCE WITH APPLICABLE CODE REQUIREMENTS AND GOVERNING WIND SPEEDS FOR THE PROJECT LOCATION.
6. THE ALLOWABLE DESIGN PRESSURES AND LOAD CAPACITIES SHOWN IN THIS DRAWING ARE ALLOWABLE STRESS DESIGN (ASD) BASIS AND ARE AS LIMITED BY ASTM E-1300 GLASS TABLES, TESTED PRESSURES, AND MULLION CALCULATIONS. ALTERNATE COMPARATIVE OR RATIONAL ANALYSIS CALCULATIONS AS DEEMED APPROPRIATE ON A PROJECT BASIS BY THE ENGINEER OF RECORD IS ACCEPTABLE.
7. DISSIMILAR MATERIALS THAT COME INTO CONTACT, INCLUDING BUT NOT LIMITED TO FASTENERS IN CONTACT WITH PRESSURE TREATED WOOD SUBSTRATES OR ALUMINUM, SHALL BE COATED OR OTHERWISE PROTECTED PER FBC REQUIREMENTS TO PREVENT CORROSION OR GALVANIC REACTIONS.
8. SEALING AND FLASHING STRATEGIES FOR OVERALL WATER INFILTRATION RESISTANCE OF THE INSTALLED PRODUCT IS NOT WITHIN THE SCOPE OF THIS APPROVAL AND SHALL BE THE RESPONSIBILITY OF OTHERS.
9. THE 4/3 ALLOWABLE STRESS INCREASE HAS NOT BEEN USED IN THE ANCHOR ANALYSIS FOR THIS SYSTEM. THE 1.6 Cd FACTOR WAS USED IN THE ANALYSIS OF WOOD SUBSTRATE.
10. STRUCTURAL INTEGRITY OF SUBSTRATE MATERIALS TO RECEIVE THE LOADS FROM THIS PRODUCT, AND INSTALLATION OF WOOD BUCKS OR OTHER ACCESSORIES TO THE SUBSTRATE, TO BE ENGINEERED BY OTHERS OR AS APPROVED BY THE AUTHORITY HAVING JURISDICTION.
11. THIS PRODUCT SHALL BE INSTALLED USING ONE OF THE APPROVED FASTENING OR WELDING METHODS INDICATED IN THIS DRAWING, AS APPROPRIATE FOR THE SUBSTRATE TYPE, OR AS INDICATED BY THE ENGINEER OF RECORD IN APPROVED SHOP DRAWINGS. ANCHOR SIZE, EMBEDMENT, EDGE DISTANCE, AND LOCATIONS, SHALL BE IN ACCORDANCE WITH THESE DRAWINGS OR AS INDICATED IN APPROVED SHOP DRAWINGS.
12. MINIMUM ANCHOR EMBEDMENTS LISTED IN THIS DRAWING SHALL BE BEYOND WALL DRESSING OR STUCCO AND FULLY INTO SUBSTRATE. LOAD-BEARING SHIMS SHALL BE USED AT ALL ANCHOR LOCATIONS WHERE A GAP OF MORE THAN 1/16" EXISTS BETWEEN THE PRODUCT AND OPENING SUBSTRATE. MAXIMUM SHIM GAP IS AS INDICATED IN THESE DRAWINGS.
13. SUBTRATES SHALL MEET THE MINIMUM STRENGTH REQUIREMENTS AS SHOWN IN ANCHOR DETAILS IN SECTION 6. CONCRETE OR MASONRY SUBSTRATES SHALL NOT BE CRACKED. FOR INSTALLATION TO METAL SUBSTRATES, ANCHORS SHALL BE LONG ENOUGH TO BE FULLY THREADED THROUGH THE METAL THICKNESS WITH AN ADDITIONAL 3/16" MIN. OF THREADS BEYOND.
14. CONSTRUCTION NOTES: THE VERITICAL FRAME MEMBERS RUN THROUGH WHILE THE HORIZONTAL MEMBERS ARE SQUARE CUT & BUTTED TO THE VERTICAL FRAME MEMBER. THE VERTICAL MEMBERS ARE FASTENED TO THE HORIZONTAL MEMBERS WITH ANCHORS INTO SCREW SPLINES. ALL CONSTRUCTION SHALL BE IN ACCORDANCE WITH KAWNEER INSTALLATION INSTRUCTIONS. APPLY SEALANT TO END DAM AND OVER END DAM FASTENERS PER INSTALLATION INSTRUCTIONS. SEAL OVER ALL PERMITER ANCHORS. APPLY SEALANT TO PROFILE ENDS OF ALL HORIZONTAL MEMBERS AT ASSEMBLY PER INSTALLATION INSTRUCTIONS. APPLY SEALANT IN GASKET REGLETS AND ON VERTICAL MULLION UNDER GLASS STOPS PER INSTALLATION INSTRUCTIONS. APPLY 1" LONG SEALANT BEAD TO GLAZING GASKET REGLET CORNERS JUST BEFORE INSTALLING GLAZING GASKETS. SEAL BETWEEN SILL FLASHING/HEAD RECEPTOR END DAMS AND JAMB FILLERS.

SILICONE REQUIREMENTS:

DOW CORNING 791 - WEATHER SEALS E

PERIMETER SEALS (BY OTHERS) P

TABLE OF CONTENTS

SHEET	DESCRIPTION
01	SECTION 1 - GENERAL NOTES
02	SECTION 2 - SAMPLE ELEVATION
03	SECTION 3 - VERTICAL FRAMING DETAILS
04	SECTION 3 - HORIZONTAL FRAMING DETAILS
05	SECTION 3 - GLAZED SILL FRAMING DETAILS
06	SECTION 3 - METAL PANEL SILL FRAMING DETAILS
07	SECTIONS 4 AND 5 - MULLION LOAD TABLE, TYP. GLAZING DETAIL
08	SECTION 6 - PERIMETER ANCHOR DETAILS
09	SECTIONS 7 AND 8 - EXTRUSION PROFILES, BOM

Lucas Turner
2023.08.17
20:59:07
-05'00'

REV. #	DATE	
1	08/17/2023	2023 FBC UPDATE
-	02/11/2021	INITIAL RELEASE

PRINTS ISSUED FOR

KAWNEER
555 GUTHRIDGE COURT
NORCROSS, GEORGIA 30092
PH. 770-449-5555
WWW.KAWNEER.COM

LUCAS A. TURNER
LICENSE
No. 58201
STATE OF FLORIDA
PROFESSIONAL ENGINEER

8/17/2023
LUCAS A. TURNER
FL P.E. #58201

TURNER ENGINEERING & CONSULTING, INC.
2428 OLD NATCHEZ TRACE TRL.
CAMDEN, TN 38320
PH. 941-380-1574

DRAWING NO. 451UT-Cntr-TallSill	PRODUCT TRIFAB 451UT
FPA # FL10008	SECTION 01
DATE 02/11/2021	
SCALE NTS	SHEET 01 OF 09

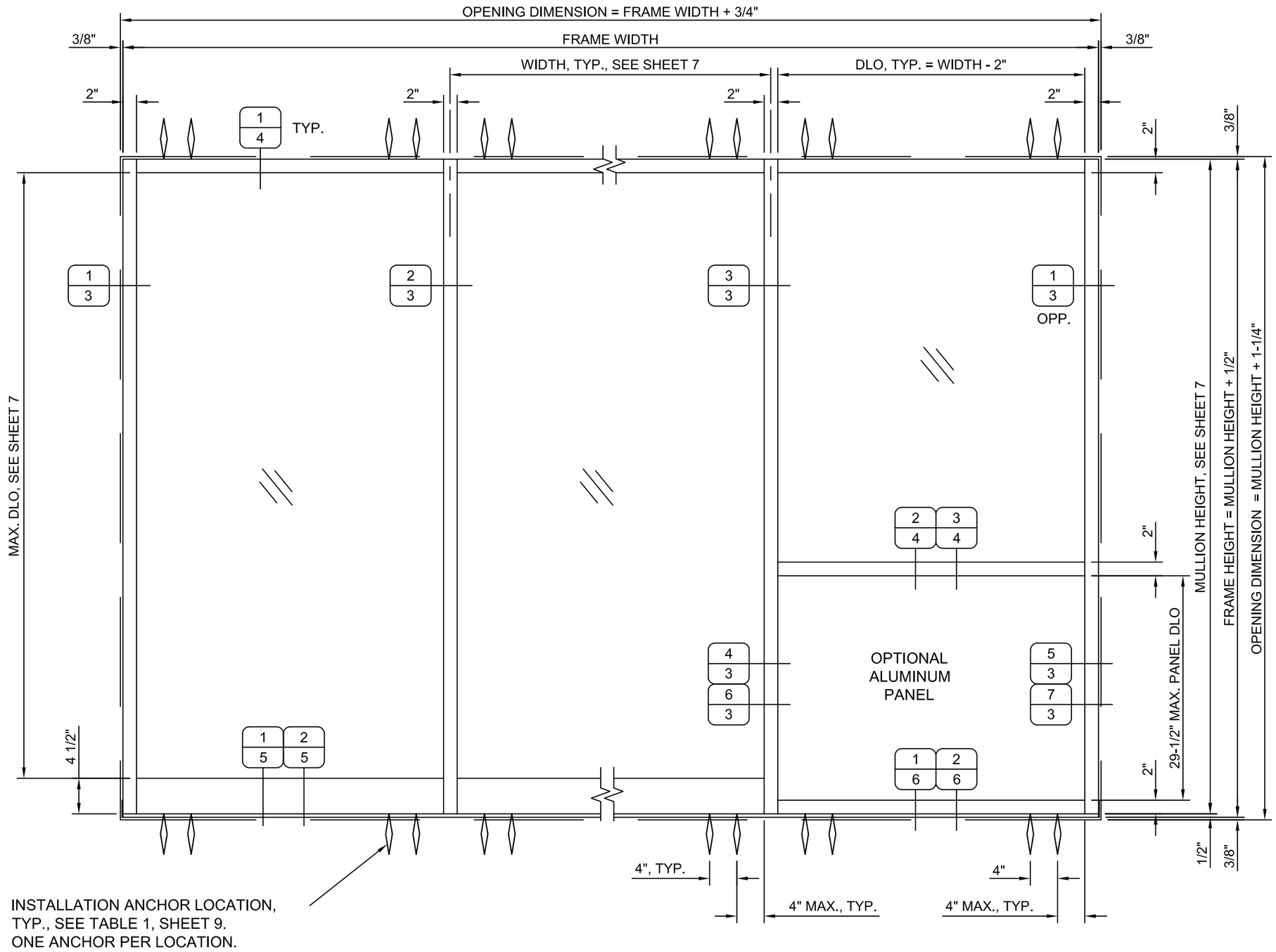

SAMPLE EXTERIOR ELEVATION

REV. #	DATE	
1	08/17/2023	2023 FBC UPDATE
-	02/11/2021	INITIAL RELEASE
		PRINTS ISSUED FOR

KAWNEER
555 GUTHRIDGE COURT
NORCROSS, GEORGIA 30092
PH. 770-449-5555
WWW.KAWNEER.COM

LUCAS A. TURNER
LICENSE
No. 58201
STATE OF FLORIDA
PROFESSIONAL ENGINEER

8/17/2023
LUCAS A. TURNER
FL P.E. #58201

TURNER ENGINEERING & CONSULTING, INC.
2428 OLD NATCHEZ TRACE TRL.
CAMDEN, TN 38320
PH. 941-380-1574

DRAWING NO. 451UT-Cntr-TallSill	PRODUCT TRIFAB 451UT
FPA # FL10008	SECTION 02
DATE 02/11/2021	
SCALE NTS	SHEET 02 OF 09

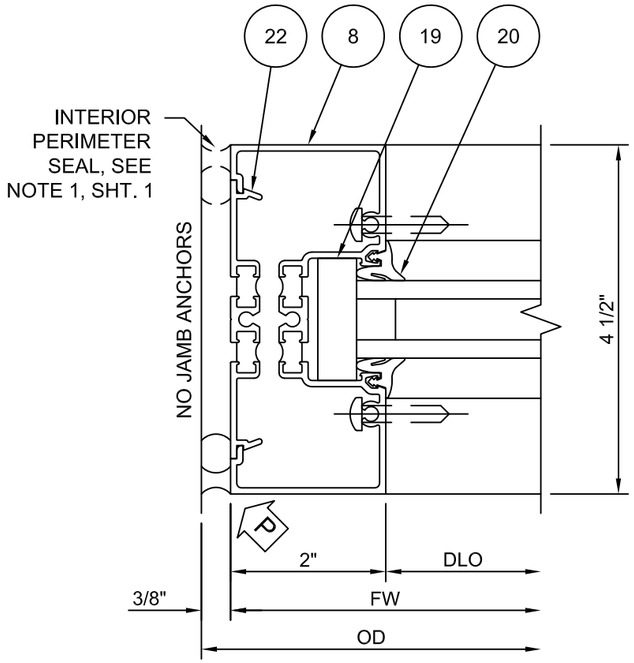

1	JAMB
3	GLAZED

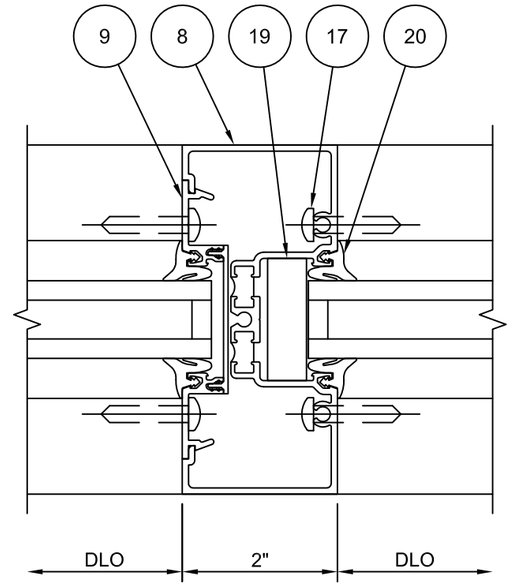

2	MULLION
3	

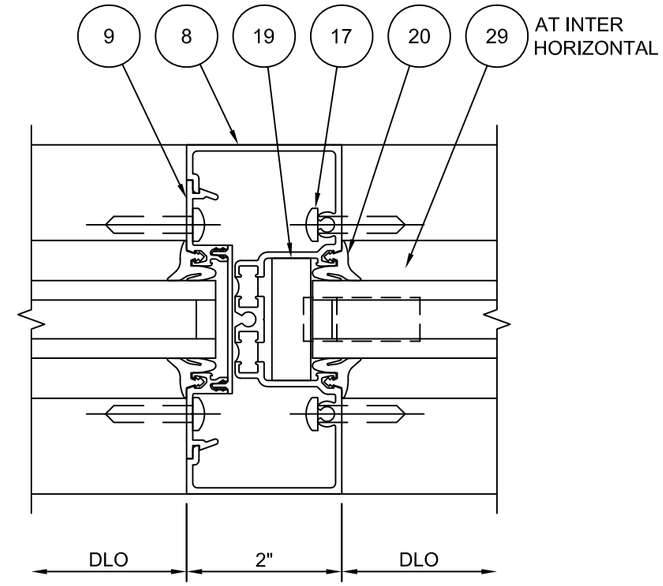

3	MULLION
3	W/ HORIZONTAL

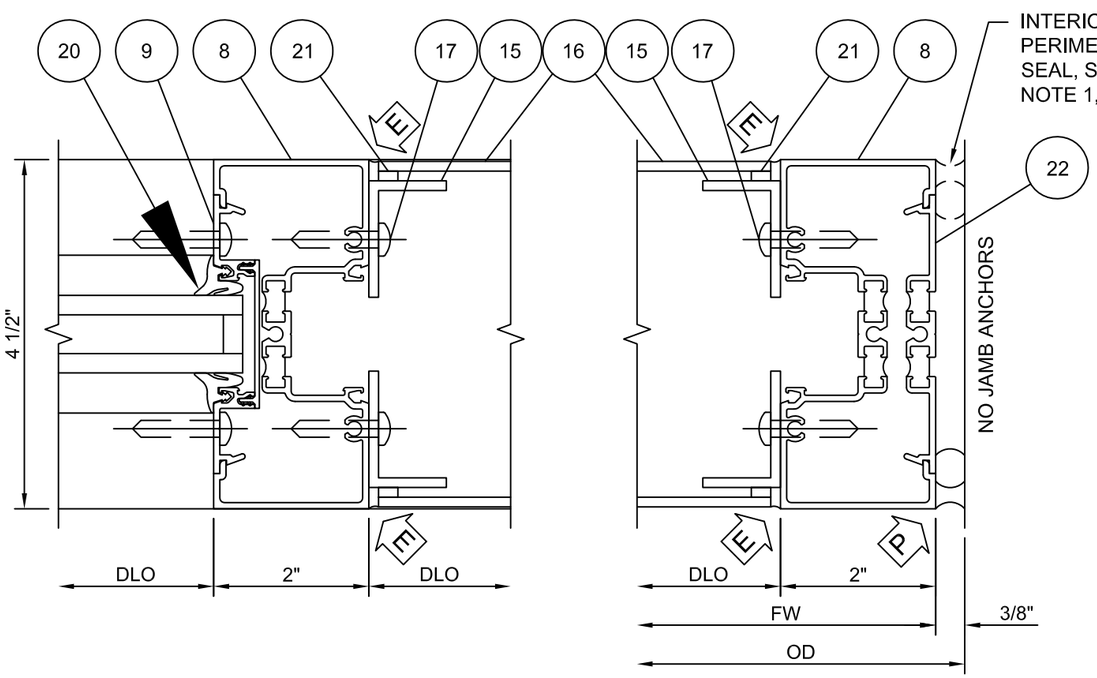

4	MULLION
3	GLAZED / DOUBLE METAL PANEL

5	JAMB
3	DOUBLE METAL PANEL

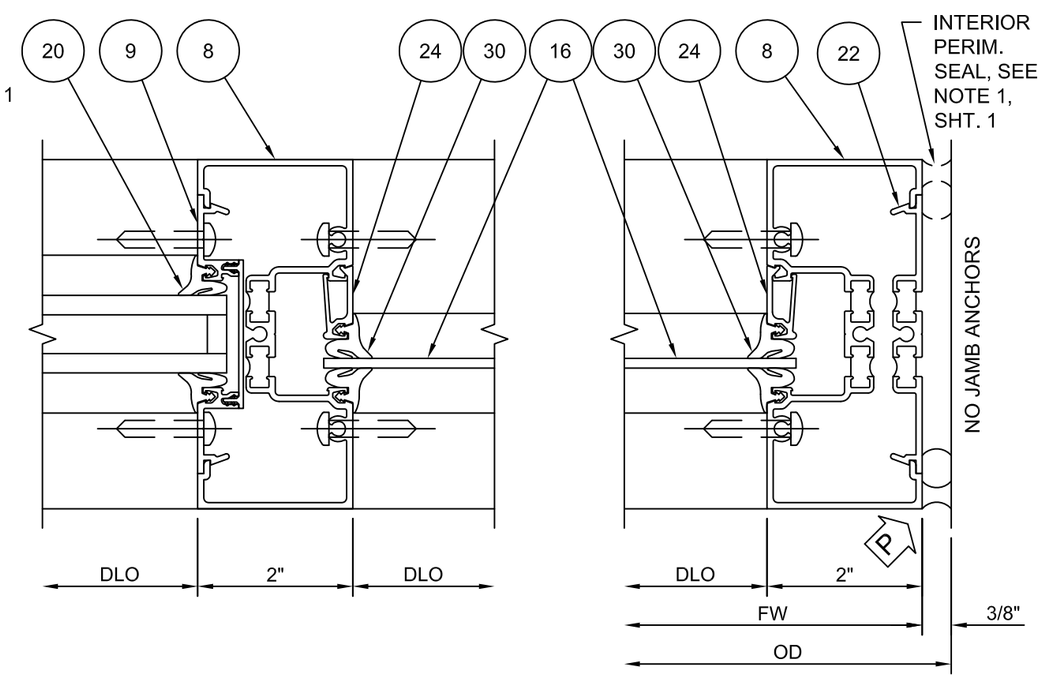

6	MULLION
3	GLAZED / SINGLE METAL PANEL

7	JAMB
3	SINGLE METAL PANEL

REV. #	DATE
1	08/17/2023
-	02/11/2021

2023 FBC UPDATE

INITIAL RELEASE

PRINTS ISSUED FOR

KAWNEER
555 GUTHRIDGE COURT
NORCROSS, GEORGIA 30092
PH. 770-449-5555
WWW.KAWNEER.COM

LUCAS A. TURNER
LICENSE
No. 58201
STATE OF FLORIDA
PROFESSIONAL ENGINEER

8/17/2023
LUCAS A. TURNER
FL P.E. #58201

TURNER ENGINEERING & CONSULTING, INC.
2428 OLD NATCHEZ TRACE TRL.
CAMDEN, TN 38320
PH. 941-380-1574

DRAWING NO.	PRODUCT
451UT-Cntr-TallSill	TRIFAB 451UT
FPA # FL10008	SECTION 03
DATE 02/11/2021	SHEET 03 OF 09
SCALE NTS	

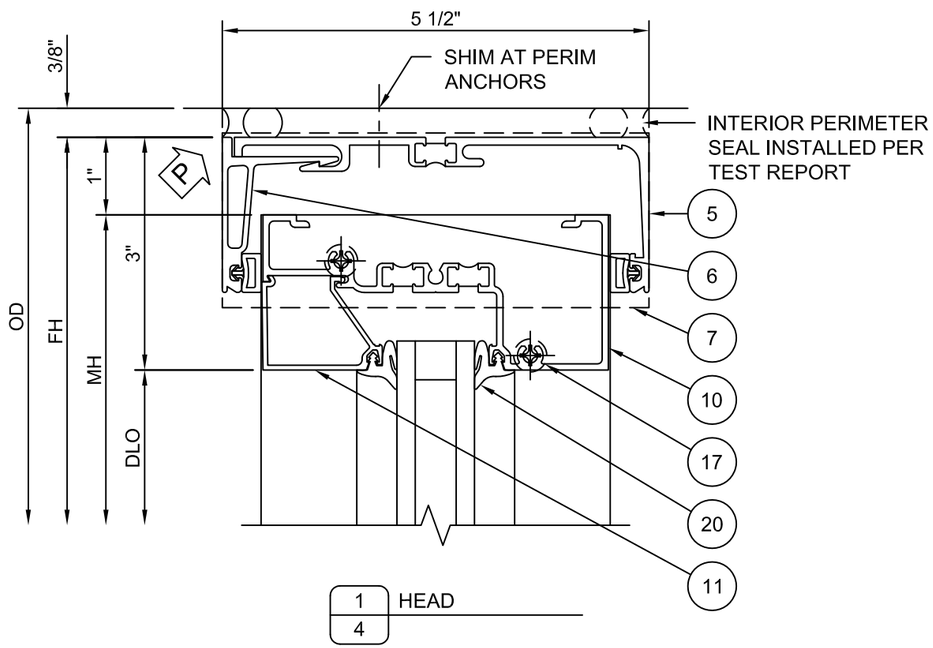

1 HEAD
4

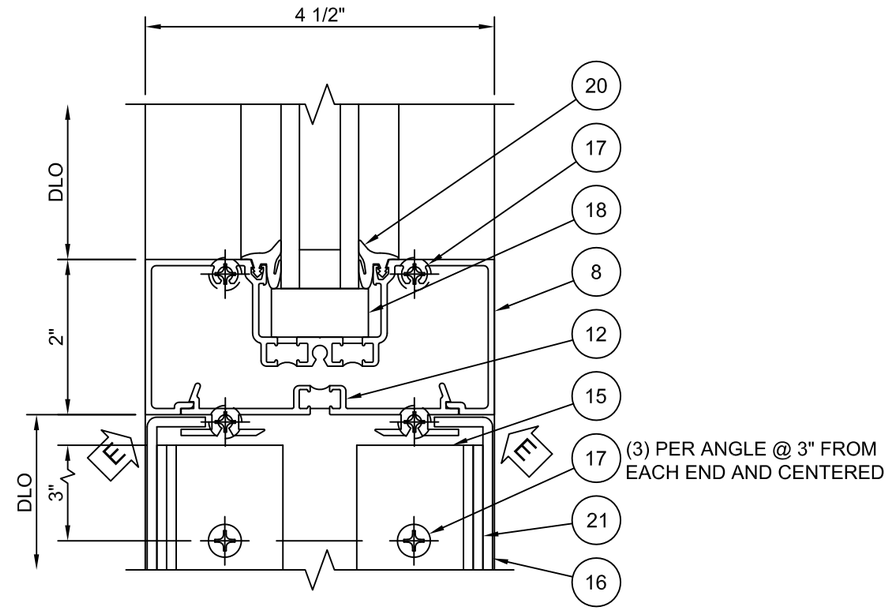

2 INTERMEDIATE
4 GLAZED / DOUBLE METAL PANEL

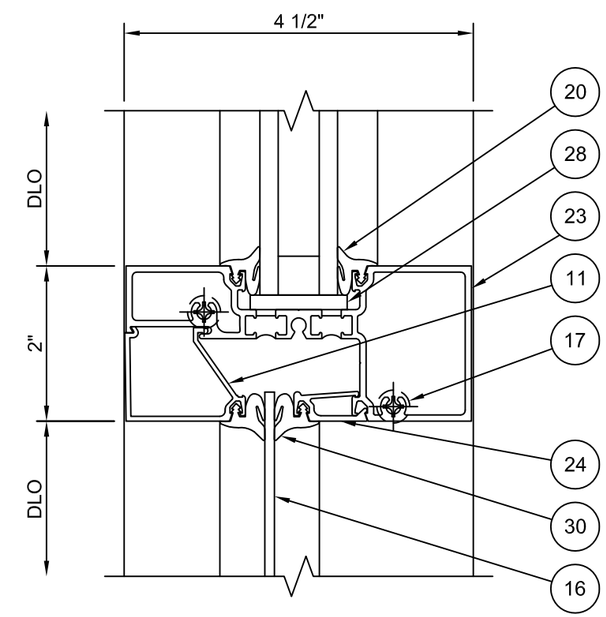

3 INTERMEDIATE
4 GLAZED / SINGLE METAL PANEL

REV. #	DATE
1	08/17/2023
-	02/11/2021

PRINTS ISSUED FOR
INITIAL RELEASE
2023 FBC UPDATE

KAWNEER
555 GUTHRIDGE COURT
NORCROSS, GEORGIA 30092
PH. 770-449-5555
WWW.KAWNEER.COM

LUCAS A. TURNER
LICENSE
No. 58201
STATE OF FLORIDA
PROFESSIONAL ENGINEER

8/17/2023
LUCAS A. TURNER
FL P.E. #58201

TURNER ENGINEERING & CONSULTING, INC.
2428 OLD NATCHEZ TRACE TRL.
CAMDEN, TN 38320
PH. 941-380-1574

DRAWING NO. 451UT-Cntr-TallSill	PRODUCT TRIFAB 451UT
FPA # FL10008	SECTION 03
DATE 02/11/2021	
SCALE NTS	SHEET 04 OF 09

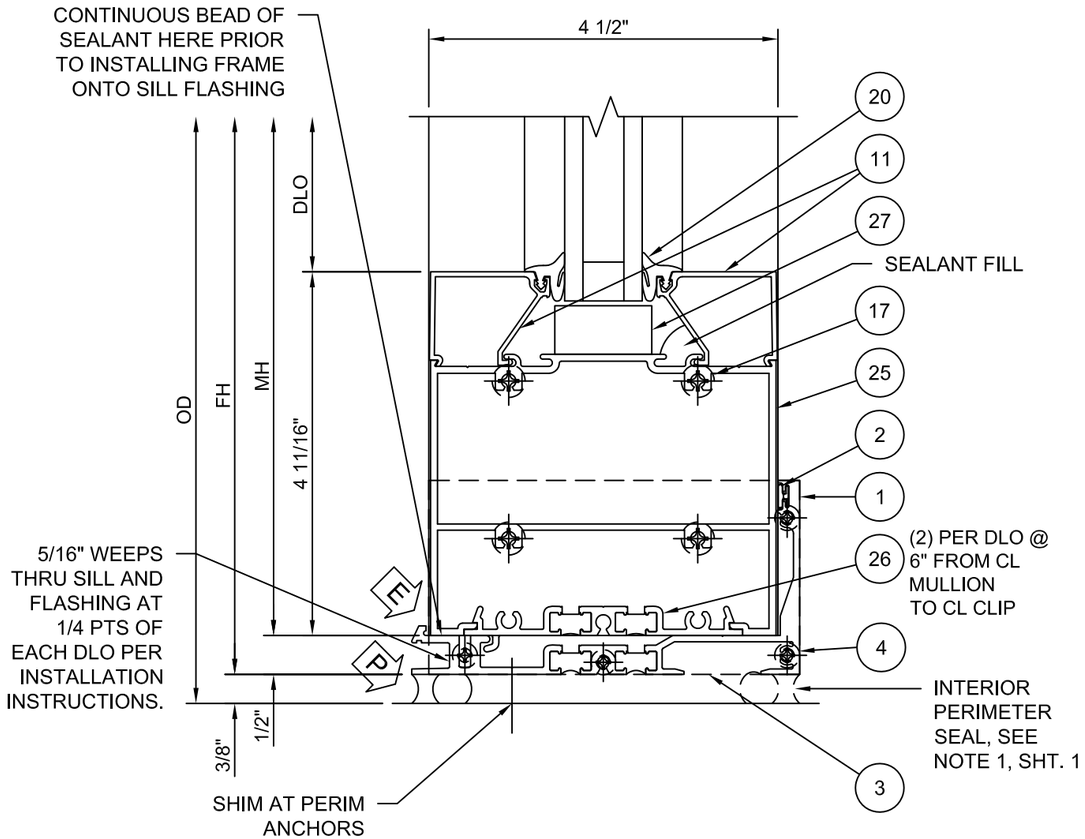

1	WIDE SIDELITE SILL
5	W/ FILLER CLIP

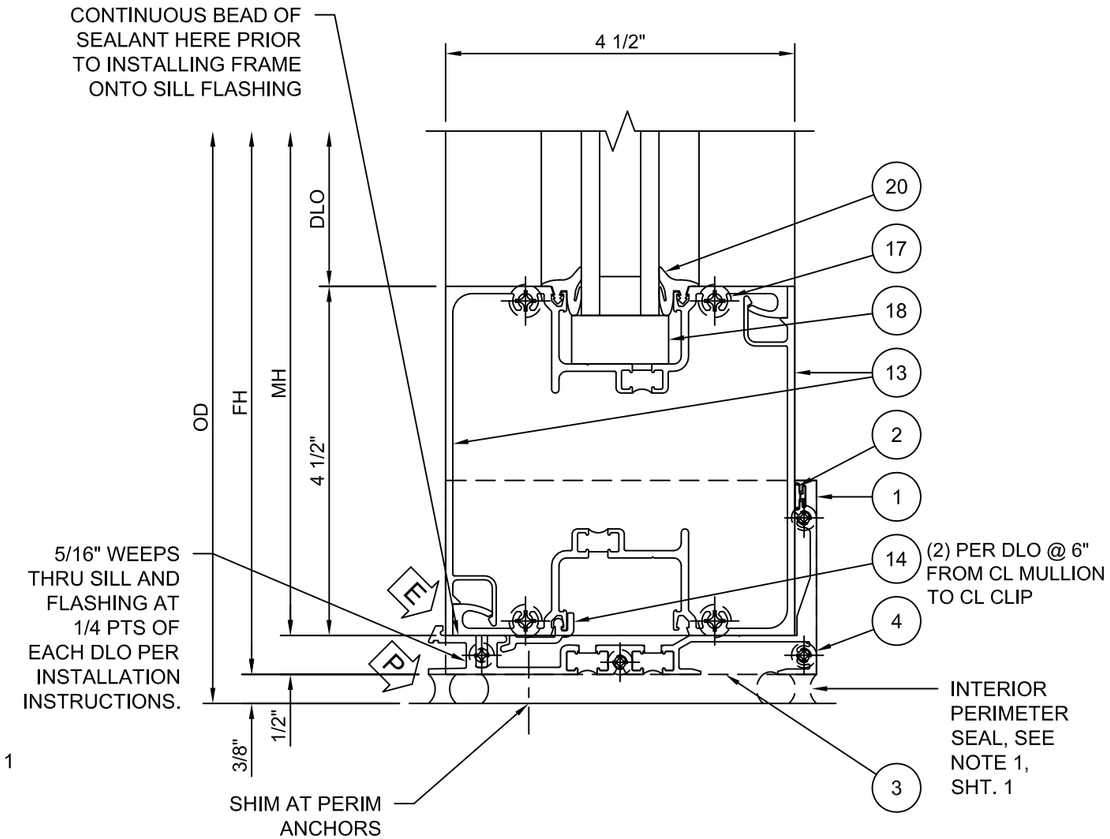

2	4-1/2" x 4-1/2" SILL
5	W/ REGLET CLIP

REV. #	DATE
1	08/17/2023
-	02/11/2021

PRINTS ISSUED FOR
INITIAL RELEASE
2023 FBC UPDATE

KAWNEER
555 GUTHRIDGE COURT
NORCROSS, GEORGIA 30092
PH. 770-449-5555
WWW.KAWNEER.COM

LUCAS A. TURNER
LICENSE
No. 58201
STATE OF FLORIDA
PROFESSIONAL ENGINEER

8/17/2023
LUCAS A. TURNER
FL P.E. #58201

TURNER ENGINEERING & CONSULTING, INC.
2428 OLD NATCHEZ TRACE TRL.
CAMDEN, TN 38320
PH. 941-380-1574

DRAWING NO. 451UT-Cntr-TallSill	PRODUCT TRIFAB 451UT
FPA # FL10008	SECTION 03
DATE 02/11/2021	
SCALE NTS	SHEET 05 OF 09

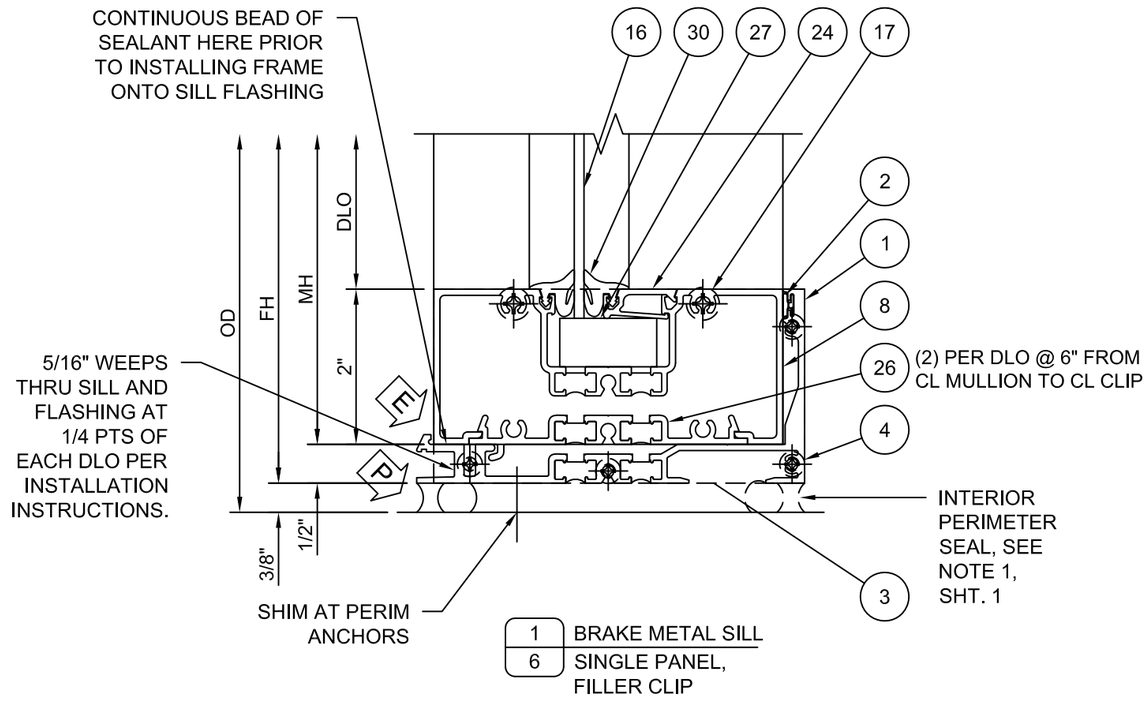

1	BRAKE METAL SILL
6	SINGLE PANEL, FILLER CLIP

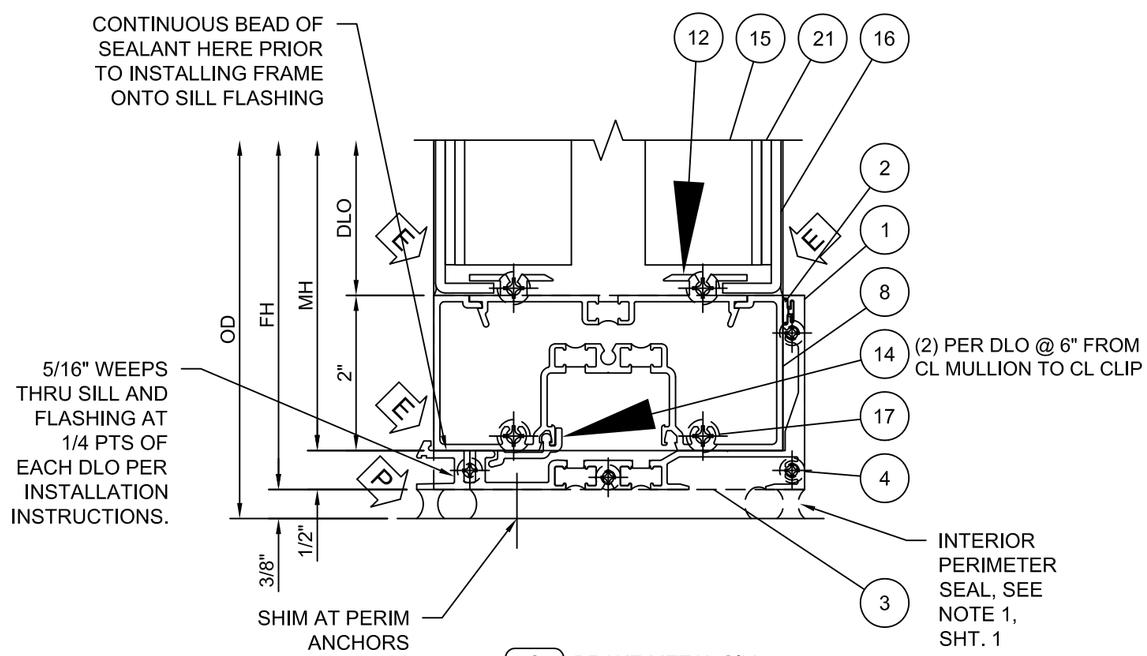

2	BRAKE METAL SILL
6	DOUBLE PANEL, REGLET CLIP

REV. #	DATE	
1	08/17/2023	2023 FBC UPDATE
-	02/11/2021	INITIAL RELEASE
		PRINTS ISSUED FOR

KAWNEER
555 GUTHRIDGE COURT
NORCROSS, GEORGIA 30092
PH. 770-449-5555
WWW.KAWNEER.COM

LUCAS A. TURNER
LICENSE
No. 58201
STATE OF FLORIDA
PROFESSIONAL ENGINEER

8/17/2023
LUCAS A. TURNER
FL P.E. #58201

TURNER ENGINEERING & CONSULTING, INC.
2428 OLD NATCHEZ TRACE TRL.
CAMDEN, TN 38320
PH. 941-380-1574

DRAWING NO. 451UT-Cntr-TallSill	PRODUCT TRIFAB 451UT
FPA # FL10008	SECTION 03
DATE 02/11/2021	
SCALE NTS	SHEET 06 OF 09

JAMB AND MULLION LOAD CAPACITY				
DIMENSION			JAMB "J1"	MULLION "M1"
WIDTH "W" (in.)	MULL HEIGHT "H" (in.)	MAX. DLO HEIGHT (in.)	(+/- psf)	(+/- psf)
24	72	65 1/2	52.5	52.5
30			52.5	52.5
36			52.5	52.5
42			48.3	48.3
48			44.9	44.9
54			42.6	42.6
60			35.0	35.0
24	77 3/4	71 1/4	52.5	52.5
30			52.5	52.5
36			48.1	48.1
42			43.4	43.4
48			40.1	40.1
54			37.7	37.7
60			35.0	35.0
24	84	77 1/2	52.5	52.5
30			48.6	48.6
36			41.4	41.4
42			36.5	36.5
48			33.0	33.0
54			30.4	30.4
24	96	89 1/2	39.6	39.6
30			32.1	32.1
36			27.3	27.3
42			23.9	23.9
48			21.4	21.4
24	108	101 1/2	27.6	27.6
30			22.4	22.4
36			18.9	18.9
42			16.5	16.5
24	120	113 1/2	20.1	20.1
30			16.2	16.2
36			13.7	13.7

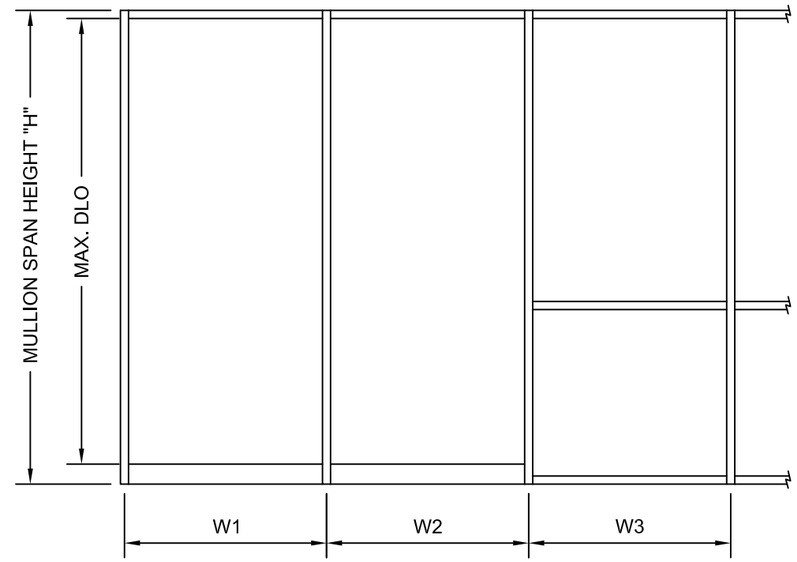

WIDTH "W" = W1 (JAMB)

WIDTH "W" = $\frac{W2 + W3}{2}$ (MULLION)

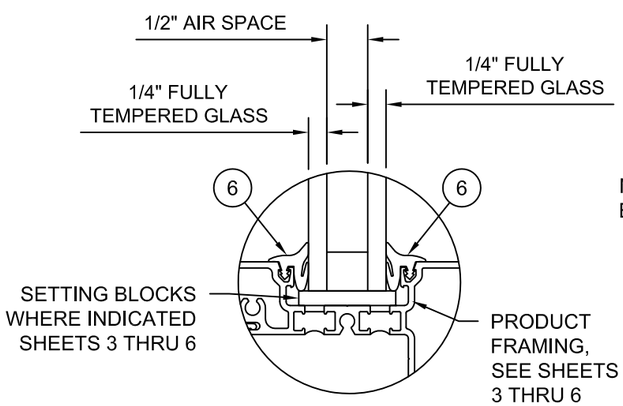

TYP. GLAZING DETAIL

NOTE: GLAZING MEETS OR EXCEEDS MULLION DESIGN PRESSURES INDICATED IN LOAD CAPACITY TABLE ABOVE, IN ALL SIZES.

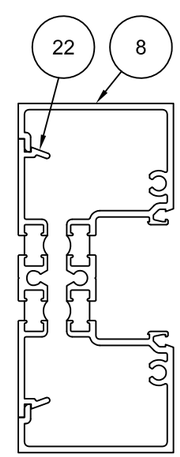

JAMB
"J1"

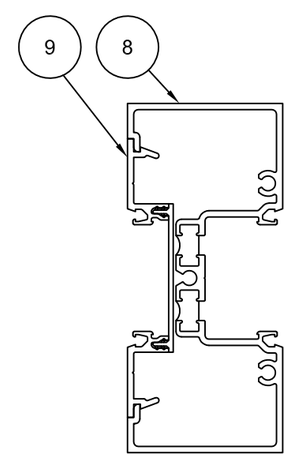

MULLION
"M1"

DATE	REV. #
08/17/2023	1
02/11/2021	-

2023 FBC UPDATE
INITIAL RELEASE
PRINTS ISSUED FOR

KAWNEER
555 GUTHRIDGE COURT
NORCROSS, GEORGIA 30092
PH. 770-449-5555
WWW.KAWNEER.COM

LUCAS A. TURNER LICENSE No. 58201 STATE OF FLORIDA PROFESSIONAL ENGINEER

8/17/2023
LUCAS A. TURNER
FL P.E. #58201

TURNER ENGINEERING & CONSULTING, INC.
2428 OLD NATCHEZ TRACE TRL.
CAMDEN, TN 38320
PH. 941-380-1574

DRAWING NO. 451UT-Cntr-TallSill	PRODUCT TRIFAB 451UT
FPA # FL10008	SECTIONS 04/05
DATE 02/11/2021	
SCALE NTS	SHEET 07 OF 09

TABLE 1. QUALIFIED ANCHOR INFORMATION

ID	SUBSTRATE	ANCHOR	MIN. EMBEDMENT	MIN. EDGE DISTANCE
A	SOLID UNCRACKED CONCRETE (3050 PSI MIN.)	1/4" DEWALT COATED CARBON STEEL ULTRACON+	1 3/4"	2 1/2"
B	CMU (ASTM C-90) (JAMBS ONLY)	1/4" DEWALT COATED CARBON STEEL ULTRACON+	1 3/4"	2 1/2"
C	SOLID UNCRACKED CONCRETE (3350 PSI MIN.)	1/4" DEWALT CRETE-FLEX SS4 MASONRY SCREW	1 3/4"	1"
D	CMU (ASTM C-90) (JAMBS ONLY)	1/4" DEWALT CRETE-FLEX SS4 MASONRY SCREW	1 1/4"	2 1/2"
E	SOLID UNCRACKED CONCRETE (2000 PSI MIN.)	1/4" ITW COATED CARBON STEEL TAPCON	1 1/2"	1 1/2"
F	CMU (DENSITY > 117 PCF) (JAMBS ONLY)	1/4" ITW COATED CARBON STEEL TAPCON	1"	2"
G	CONCRETE (3000 PSI MIN)	1/4" HILTI COATED CARBON STEEL OR STAINLESS STEEL KWIK-CON II	1"	2 1/2"
H	CMU (ASTM C-90)	1/4" HILTI COATED CARBON STEEL OR STAINLESS STEEL KWIK-CON II	1"	2 1/2"
I	2x MIN. SOUTHERN PINE WOOD (G=0.55 MIN)	#14 GRADE 5 WOOD SCREW	1 1/2"	1"
J	16 GAUGE (0.060") MIN. STEEL STUD (33 KSI YIELD MIN.) OR 1/8" MIN. ALUMINUM (6063-T5 MIN.) OR 1/8" MIN. A36 STEEL	#1/4-14 ITW TEKS SELF-DRILLING SCREW	FULL + 3 THREADS	1/2"

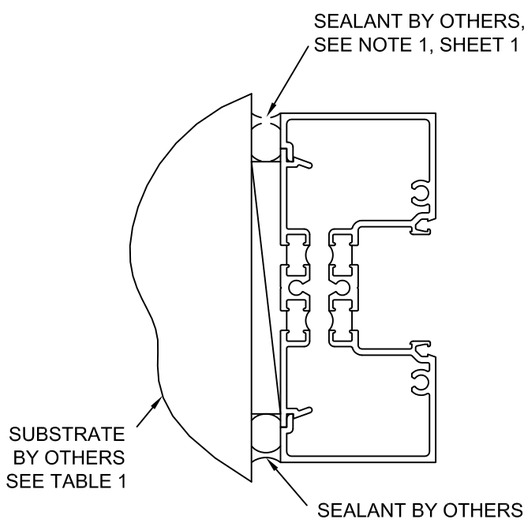

NO JAMB ANCHORAGE

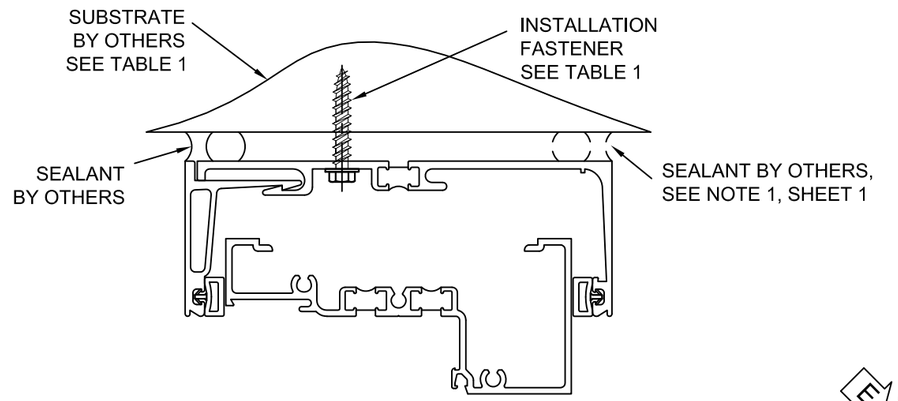

TYP. HEAD ANCHORAGE

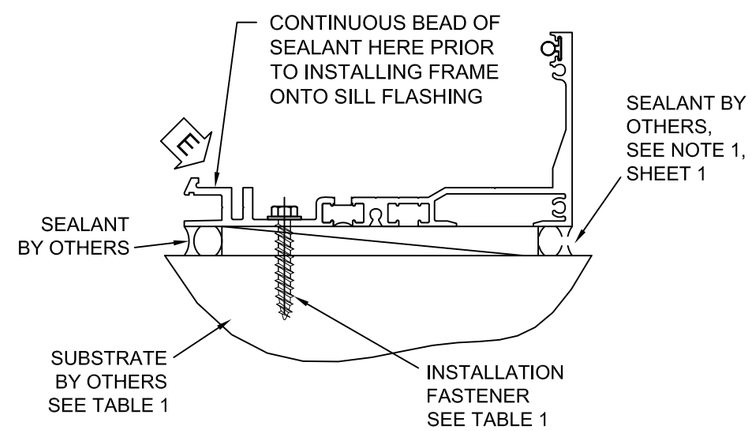

TYP. SILL ANCHORAGE

REV. #	DATE
1	08/17/2023
-	02/11/2021

PRINTS ISSUED FOR
INITIAL RELEASE
2023 FBC UPDATE

KAWNEER
555 GUTHRIDGE COURT
NORCROSS, GEORGIA 30092
PH. 770-449-5555
WWW.KAWNEER.COM

LUCAS A. TURNER
LICENSE
No. 58201
STATE OF FLORIDA
PROFESSIONAL ENGINEER

8/17/2023
LUCAS A. TURNER
FL P.E. #58201

TURNER ENGINEERING & CONSULTING, INC.
2428 OLD NATCHEZ TRACE TRL.
CAMDEN, TN 38320
PH. 941-380-1574

DRAWING NO. 451UT-Cntr-TallSill	PRODUCT TRIFAB 451UT
FPA # FL10008	SECTION 06
DATE 02/11/2021	
SCALE NTS	SHEET 08 OF 09

ITEM	PART NO.	DESCRIPTION
1	451UTVG037	451UT SILL FLASHING
2	127043	SILL FLASHING GASKET
3	451TVG316	END DAM / SCREW APPLIED / ABS
4	028808	END DAM SCREW
5	451TVG570	RECEPTOR W/ WEATHERING
6	451VG573	RECEPTOR FACE W/ WEATHERING
7	601CG317	RECEPTOR END DAM
8	452TCG001	451UT MULLION / JAMB / OG HEAD
9	451TCG002	THERMAL POCKET FILLER
10	452TCG003	451UT HEAD
11	451CG004	GLASS STOP / CENTER
12	451TVG150	BRAKE METAL ADAPTER
13	451TCG035	90 DEG CORNER HALF
14	451CG366	451 TALL SILL REGLET CLIP
15	027182	1/8" x 1" x 1-1/2" ANGLE
16		0.125" ALUM BRAKE MTL
17	028856	FRAME SPLINE SCREW
18	027073	SETTING BLOCK
19	480520	W-SIDE BLOCK
20	027074	WEDGE GASKET
21	027506	1/8" x 1/4" FOAM TAPE
22	452TCG026	FLAT FILLER (FULL LENGTH)
23	452TCG011	HORIZONTAL
24	451VG029	INFILL ADAPTER
25	450027	WIDE SIDELITE BASE
26	451UTCG365	451UT TALL SILL FILLER CLIP
27	027073	SETTING BLOCK
28	027081	SETTING BLOCK
29	451105	WATER DEFLECTOR
30	027077	WEDGE GASKET

ALL ALUMINUM COMPONENTS ARE 6063-T6

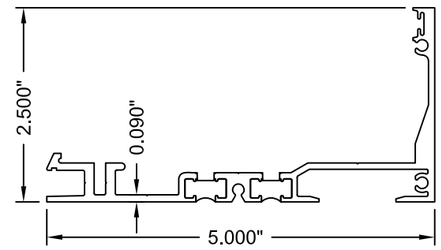

1 451UTVG037

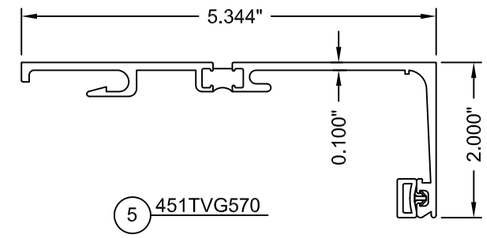

5 451TVG570

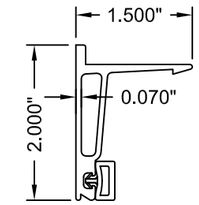

6 451VG573

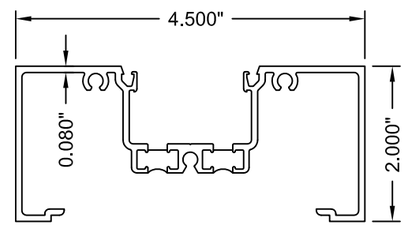

8 452TCG001

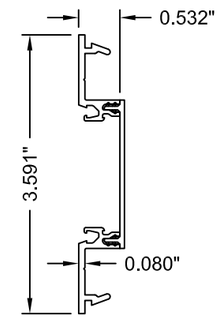

9 451TCG002

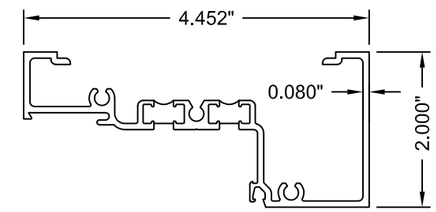

10 452TCG003

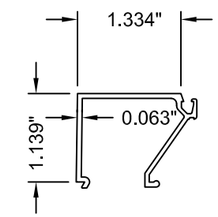

11 451CG004

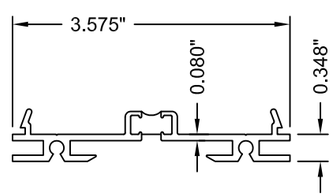

12 451TVG150

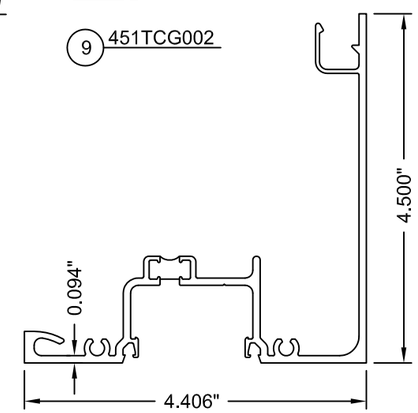

13 451TCG035

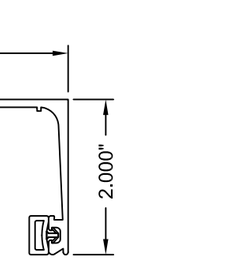

14 451CG366

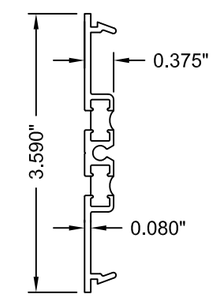

22 452TCG026

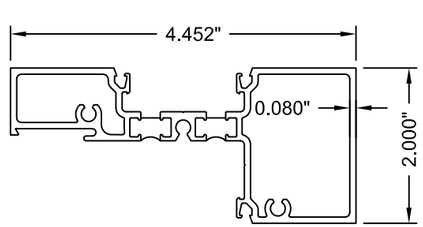

23 452TCG011

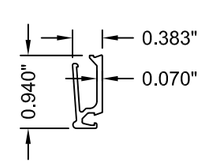

24 451VG029

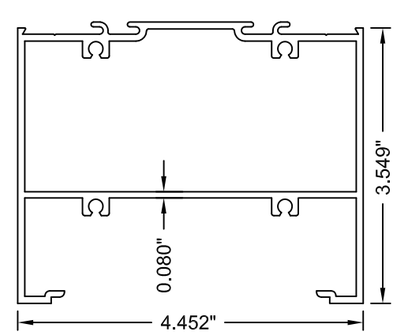

25 450027

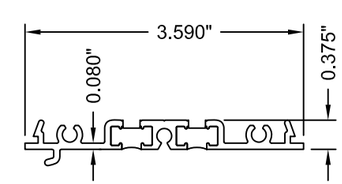

26 451UTCG365

REV. #	DATE
1	08/17/2023
-	02/11/2021

2023 FBC UPDATE
INITIAL RELEASE
PRINTS ISSUED FOR

KAWNEER
555 GUTHRIDGE COURT
NORCROSS, GEORGIA 30092
PH. 770-449-5555
WWW.KAWNEER.COM

LUCAS A. TURNER
LICENSE
No. 58201
STATE OF FLORIDA
PROFESSIONAL ENGINEER

8/17/2023
LUCAS A. TURNER
FL P.E. #58201

TURNER ENGINEERING & CONSULTING, INC.
2428 OLD NATCHEZ TRACE TRL.
CAMDEN, TN 38320
PH. 941-380-1574

DRAWING NO. 451UT-Cntr-TallSill	PRODUCT TRIFAB 451UT
FPA # FL10008	SECTIONS 07/08
DATE 02/11/2021	
SCALE NTS	SHEET 09 OF 09