KAWNEER TRIFAB 451UT CENTER – PREGLAZE

GENERAL NOTES

1. THIS STOREFRONT SYSTEM HAS BEEN TESTED TO ASTM E283, ASTM E330, ASTM E331, ASTM E547, AND AAMA 501, AND MEETS THE REQUIREMENTS OF THE FLORIDA BUILDING CODE (FBC), CURRENT EDITION, OUTSIDE THE HIGH VELOCITY HURRICANE ZONE. PRODUCT WAS TESTED WITH AND WITHOUT INTERIOR PERIMETER SEAL, BY OTHERS. WITHOUT INTERIOR PERIMETER SEAL, PRODUCT PASSED AIR INFILTRATION TESTING AT 1.56 PSF AND WATER PENETRATION RESISTANCE TEST OF 10.44 PSF. WITH INTERIOR PERIMETER SEAL, PRODUCT PASSED AIR INFILTRATION TESTING AT 6.24 PSF AND WATER PENETRATION RESISTANCE TEST OF 12 PSF.
2. A FLORIDA LICENSED ENGINEER FAMILIAR WITH STOREFRONT DESIGN SHALL APPROVE SHOP DRAWINGS FOR EACH PROJECT, AND THIS ENGINEER OF RECORD SHALL TAKE FULL RESPONSIBILITY FOR THE INSTALLED SYSTEM DESIGN AS A WHOLE WHILE MAKING SURE THAT THE LIMITATIONS INDICATED IN THIS DRAWING HAVE NOT BEEN EXCEEDED. THE INSTALLED STOREFRONT SYSTEM SHALL BE FABRICATED, GLAZED, AND ANCHORED IN ACCORDANCE WITH THIS DRAWING AND KAWNEER INSTALLATION INSTRUCTIONS, AS WELL AS THE APPLICABLE TEST REPORTS, OR AS INDICATED BY THE ENGINEER OF RECORD IN APPROVED SHOP DRAWINGS.
3. THIS DRAWING INDICATES VARIOUS APPROVED GLAZING METHODS AND FRAMING TYPES WHICH MAY BE USED SINGLY OR IN COMBINATION FOR EACH PROJECT. ANY NUMBER OF PANELS MAY BE USED HORIZONTALLY PROVIDED THE MAXIMUM DLO SIZES AS INDICATED IN THIS DRAWING ARE NOT EXCEEDED.
4. THIS PRODUCT IS NON–IMPACT AND REQUIRES THE USE OF APPROVED SHUTTERS IN WINDBORNE DEBRIS AREAS.
5. REQUIRED DESIGN PRESSURES SHALL BE DETERMINED FOR EACH PROJECT IN ACCORDANCE WITH APPLICABLE CODE REQUIREMENTS AND GOVERNING WIND SPEEDS FOR THE PROJECT LOCATION.
6. THE ALLOWABLE DESIGN PRESSURES AND LOAD CAPACITIES SHOWN IN THIS DRAWING ARE ALLOWABLE STRESS DESIGN (ASD) BASIS AND ARE AS LIMITED BY ASTM E–1300 GLASS TABLES, TESTED PRESSURES, AND MULLION CALCULATIONS. ALTERNATE COMPARATIVE OR RATIONAL ANALYSIS CALCULATIONS AS DEEMED APPROPRIATE ON A PROJECT BASIS BY THE ENGINEER OF RECORD IS ACCEPTABLE.
7. DISSIMILAR MATERIALS THAT COME INTO CONTACT, INCLUDING BUT NOT LIMITED TO FASTENERS IN CONTACT WITH PRESSURE TREATED WOOD SUBSTRATES OR ALUMINUM, SHALL BE COATED OR OTHERWISE PROTECTED PER FBC REQUIREMENTS TO PREVENT CORROSION OR GALVANIC REACTIONS.
8. SEALING AND FLASHING STRATEGIES FOR OVERALL WATER INFILTRATION RESISTANCE OF THE INSTALLED PRODUCT IS NOT WITHIN THE SCOPE OF THIS APPROVAL AND SHALL BE THE RESPONSIBILITY OF OTHERS.
9. THE 4/3 ALLOWABLE STRESS INCREASE HAS NOT BEEN USED IN THE ANCHOR ANALYSIS FOR THIS SYSTEM. THE 1.6 Cd FACTOR WAS USED IN THE ANALYSIS OF WOOD SUBSTRATE.
10. STRUCTURAL INTEGRITY OF SUBSTRATE MATERIALS TO RECEIVE THE LOADS FROM THIS PRODUCT, AND INSTALLATION OF WOOD BUCKS OR OTHER ACCESSORIES TO THE SUBSTRATE, TO BE ENGINEERED BY OTHERS OR AS APPROVED BY THE AUTHORITY HAVING JURISDICTION.
11. THIS PRODUCT SHALL BE INSTALLED USING ONE OF THE APPROVED FASTENING OR WELDING METHODS INDICATED IN THIS DRAWING, AS APPROPRIATE FOR THE SUBSTRATE TYPE, OR AS INDICATED BY THE ENGINEER OF RECORD IN APPROVED SHOP DRAWINGS. ANCHOR SIZE, EMBEDMENT, EDGE DISTANCE, AND LOCATIONS, SHALL BE IN ACCORDANCE WITH THESE DRAWINGS OR AS INDICATED IN APPROVED SHOP DRAWINGS.
12. MINIMUM ANCHOR EMBEDMENTS LISTED IN THIS DRAWING SHALL BE BEYOND WALL DRESSING OR STUCCO AND FULLY INTO SUBSTRATE. LOAD–BEARING SHIMS SHALL BE USED AT ALL ANCHOR LOCATIONS WHERE A GAP OF MORE THAN 1/16" EXISTS BETWEEN THE PRODUCT AND OPENING SUBSTRATE. MAXIMUM SHIM GAP IS AS INDICATED IN THESE DRAWINGS.
13. SUBTRATES SHALL MEET THE MINIMUM STRENGTH REQUIREMENTS AS SHOWN IN ANCHOR DETAILS IN SECTION 6. CONCRETE OR MASONRY SUBSTRATES SHALL NOT BE CRACKED. FOR INSTALLATION TO METAL SUBSTRATES, ANCHORS SHALL BE LONG ENOUGH TO BE FULLY THREADED THROUGH THE METAL THICKNESS WITH AN ADDITIONAL 3/16" MIN. OF THREADS BEYOND.
14. CONSTRUCTION NOTES: THE VERITICAL FRAME MEMBERS RUN THROUGH WHILE THE HORIZONTAL MEMBERS ARE SQUARE CUT & BUTTED TO THE VERTICAL FRAME MEMBER. THE VERTICAL MEMBERS ARE FASTENED TO THE HORIZONTAL MEMBERS WITH ANCHORS INTO SCREW SPLINES. ALL CONSTRUCTION SHALL BE IN ACCORDANCE WITH KAWNEER INSTALLATION INSTRUCTIONS. APPLY SEALANT TO END DAM AND OVER END DAM FASTENERS PER INSTALLATION INSTRUCTIONS. SEAL OVER ALL PERIMITER ANCHORS. APPLY SEALANT TO PROFILE ENDS OF ALL HORIZONTAL MEMBERS AT ASSEMBLY PER INSTALLATION INSTRUCTIONS. SEAL BETWEEN SILL AND SILL FLASHING PER INSTALLATION INSTRUCTIONS. APPLY SEALANT IN GASKET REGLETS AND ON VERTICAL MULLION UNDER GLASS STOPS PER INSTALLATION INSTRUCTIONS. SEAL BETWEEN SILL FLASHING/HEAD RECEPTOR END DAMS AND JAMB FILLERS. SEAL ALL GASKET JOINTS PER INSTALLATION INSTRUCTIONS.

SILICONE REQUIREMENTS:

DOW CORNING 791 – WEATHER SEALS E

PERIMETER SEALS (BY OTHERS) P

TABLE OF CONTENTS

SHEET	DESCRIPTION
01	SECTION 1 – GENERAL NOTES
02	SECTION 2 – SAMPLE ELEVATION, STRAP ANCHOR AT HEAD
03	SECTION 2 – SAMPLE ELEVATION, HEAD RECEPTOR
04	SECTION 3 – VERTICAL FRAMING DETAILS
05	SECTION 3 – HORIZONTAL FRAMING DETAILS
06	SECTIONS 4 AND 5 – MULLION LOAD TABLE, TYP. GLAZING DETAIL
07	SECTION 6 – PERIMETER ANCHOR DETAILS
08	SECTIONS 7 AND 8 – EXTRUSION PROFILES, BOM

Lucas Turner
2023.08.17
20:59:36
-05'00'

REV. #	DATE	
1	8/17/2023	2023 FBC UPDATE
–	02/11/2021	INITIAL RELEASE

PRINTS ISSUED FOR

KAWNEER
555 GUTHRIDGE COURT
NORCROSS, GEORGIA 30092
PH. 770–449–5555
WWW.KAWNEER.COM

LUCAS A. TURNER
LICENSE
No. 58201
STATE OF FLORIDA
PROFESSIONAL ENGINEER

8/17/2023
LUCAS A. TURNER
FL P.E. #58201

TURNER ENGINEERING & CONSULTING, INC.
2428 OLD NATCHEZ TRACE TRL.
CAMDEN, TN 38320
PH. 941–380–1574

DRAWING NO. 451UT–Cntr–PreGlaze	PRODUCT TRIFAB 451UT
FPA # FL10008	SECTION 01
DATE 02/11/2021	
SCALE NTS	SHEET 01 OF 08

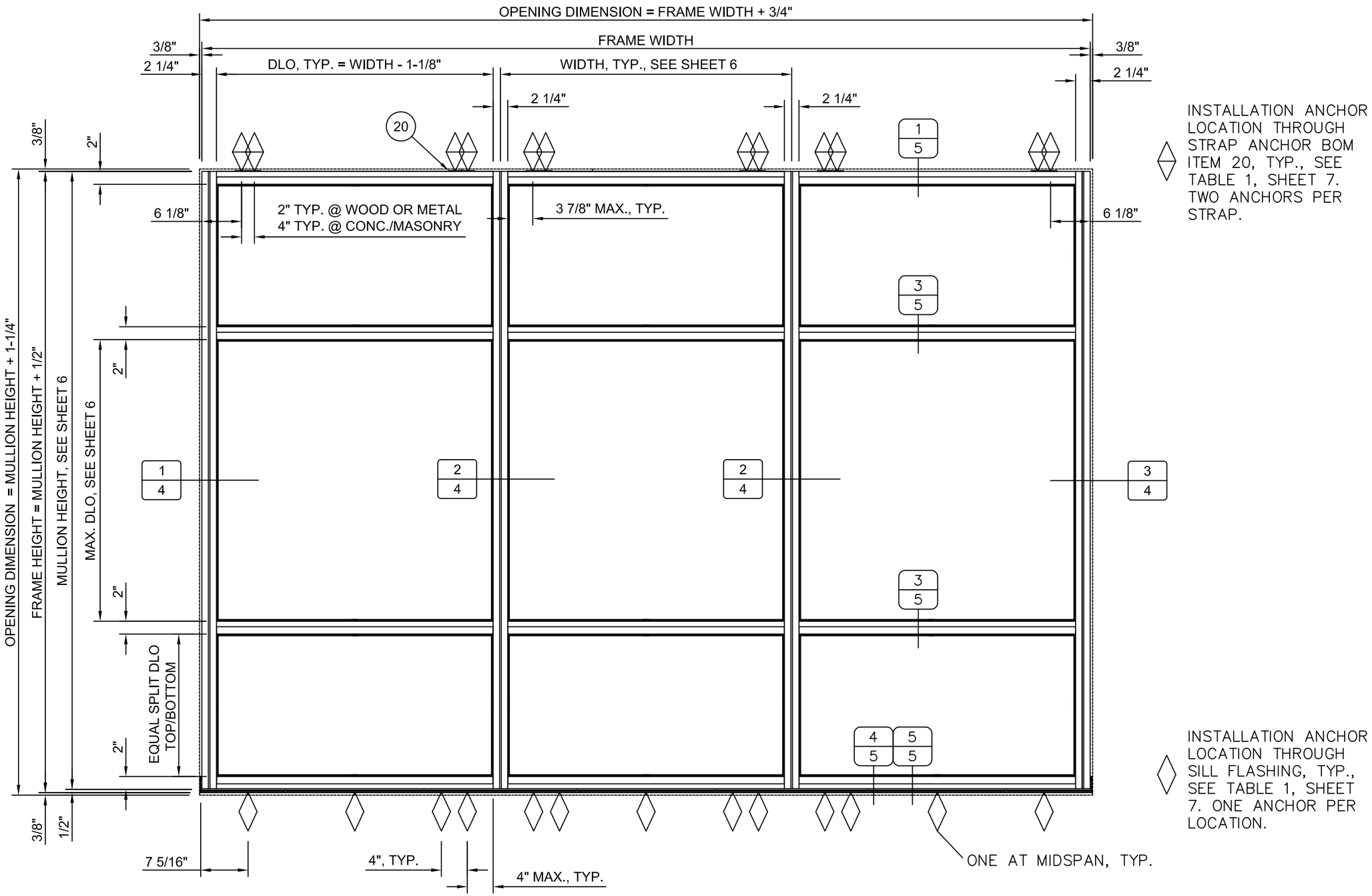

SAMPLE EXTERIOR ELEVATION W/ STRAP ANCHOR AT HEAD

REV. #	DATE	
1	8/17/2023	2023 FBC UPDATE
–	02/11/2021	INITIAL RELEASE
		PRINTS ISSUED FOR

KAWNEER
555 GUTHRIDGE COURT
NORCROSS, GEORGIA 30092
PH. 770-449-5555
WWW.KAWNEER.COM

LUCAS A. TURNER
LICENSE
No. 58201
STATE OF FLORIDA
PROFESSIONAL ENGINEER

8/17/2023
LUCAS A. TURNER
FL P.E. #58201

TURNER ENGINEERING & CONSULTING, INC.
2428 OLD NATCHEZ TRACE TRL.
CAMDEN, TN 38320
PH. 941-380-1574

DRAWING NO. 451UT-Cntr-PreGlaze	PRODUCT TRIFAB 451UT
FPA # FL10008	SECTION 02
DATE 02/11/2021	
SCALE NTS	SHEET 02 OF 08

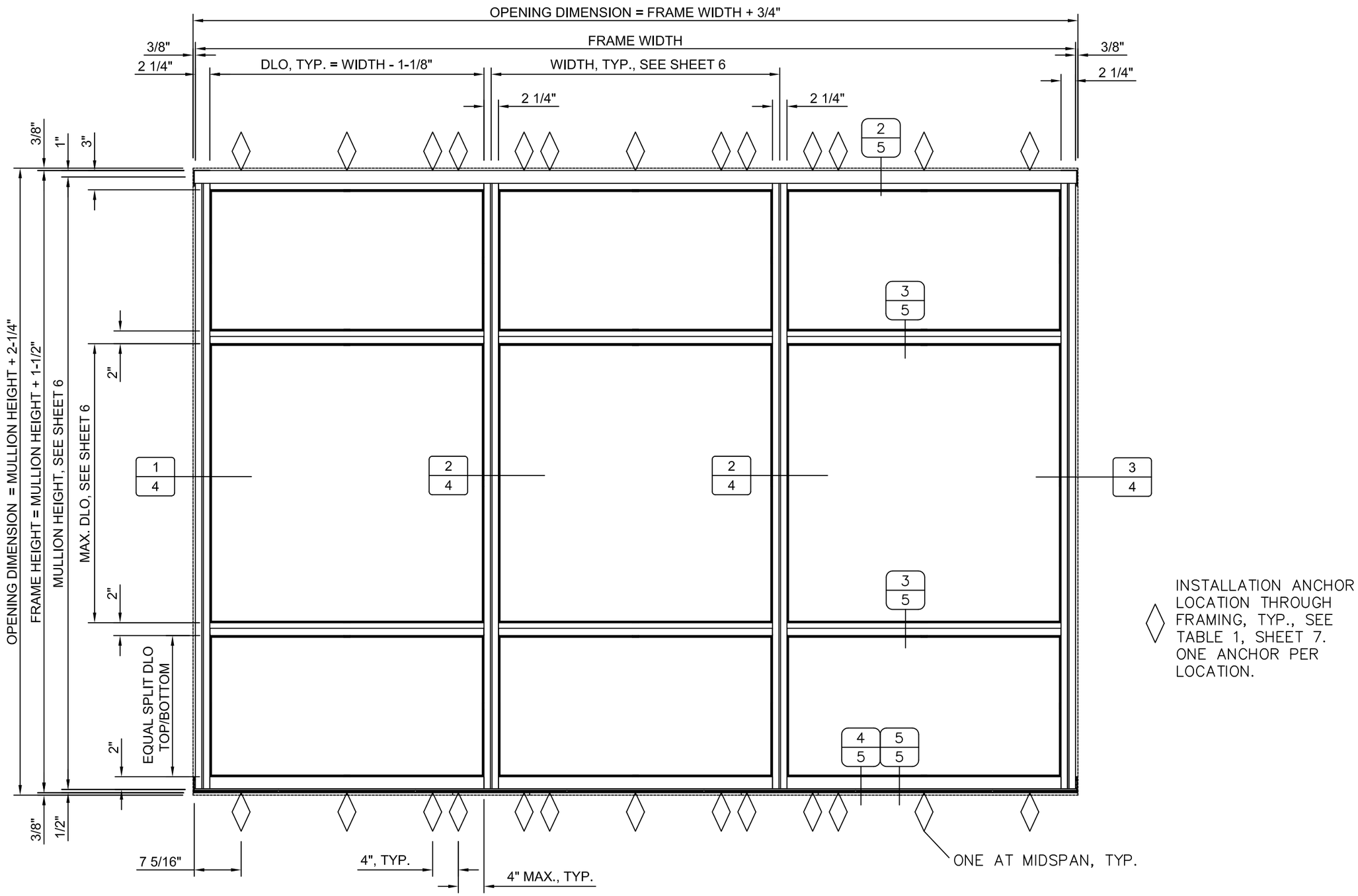

SAMPLE EXTERIOR ELEVATION W/ HEAD RECEPTOR

REV. #	DATE
1	8/17/2023
–	02/11/2021

2023 FBC UPDATE
INITIAL RELEASE
PRINTS ISSUED FOR

KAWNEER
555 GUTHRIDGE COURT
NORCROSS, GEORGIA 30092
PH. 770-449-5555
WWW.KAWNEER.COM

LUCAS A. TURNER
LICENSE
No. 58201
STATE OF FLORIDA
PROFESSIONAL ENGINEER

8/17/2023
LUCAS A. TURNER
FL P.E. #58201

TURNER ENGINEERING & CONSULTING, INC.
2428 OLD NATCHEZ TRACE TRL.
CAMDEN, TN 38320
PH. 941-380-1574

DRAWING NO. 451UT-Cntr-PreGlaze	PRODUCT TRIFAB 451UT
FPA # FL10008	SECTION 02
DATE 02/11/2021	
SCALE NTS	SHEET 03 OF 08

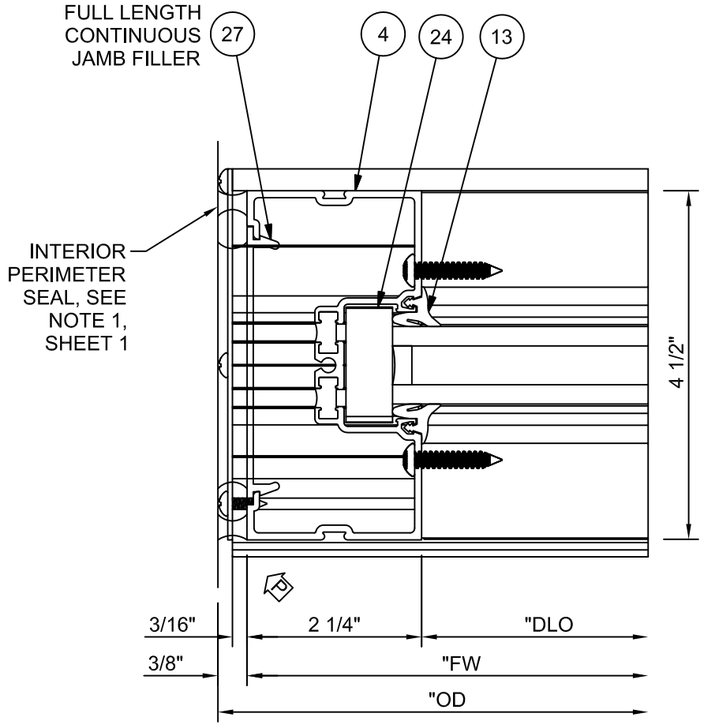

1 / 3 JAMB

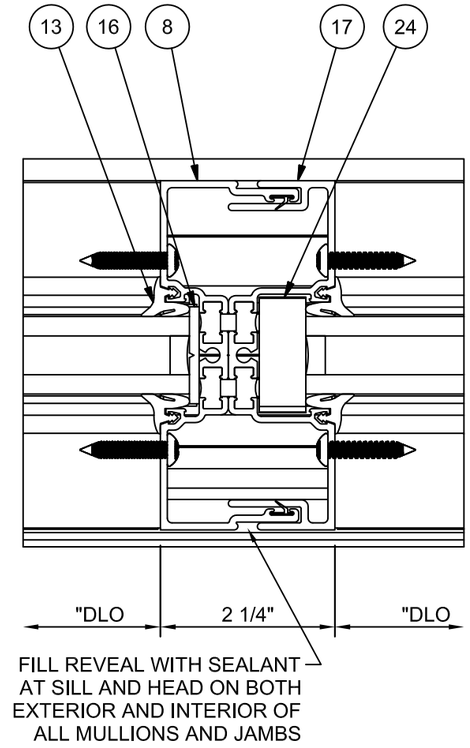

2 / 3 MULLION

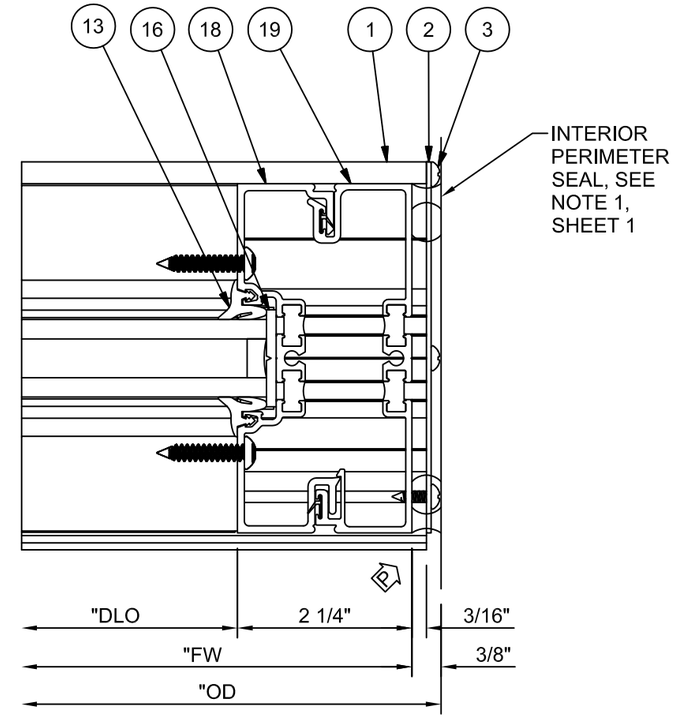

3 / 3 JAMB

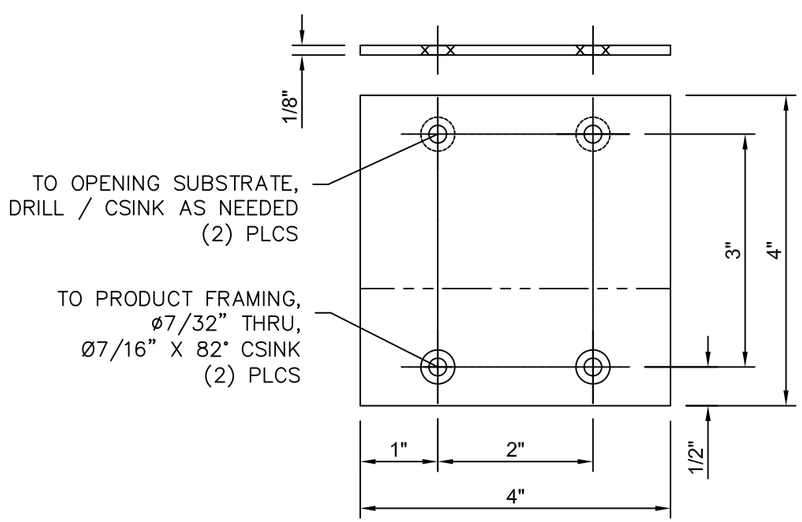

20 STRAP ANCHOR TO WOOD OR METAL SUBSTRATES

MATL: ALUM BRAKE MTL

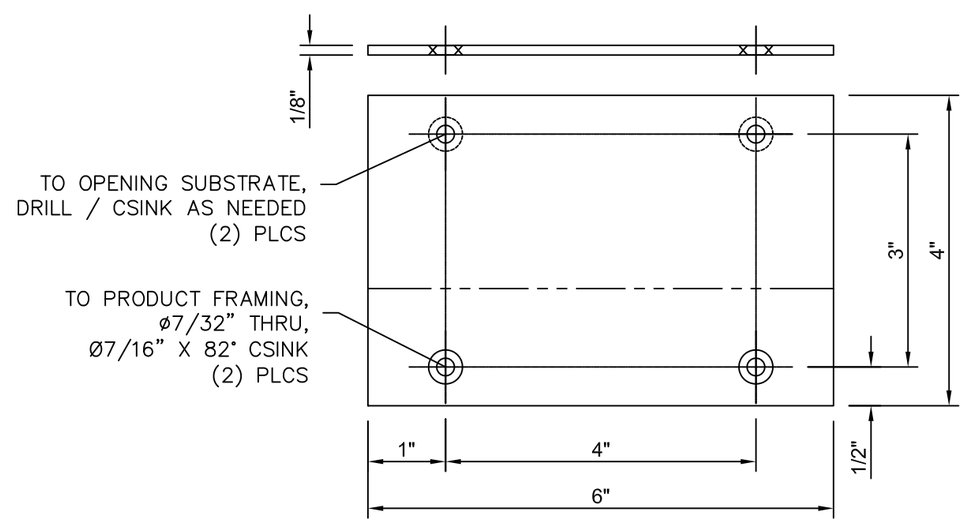

20 STRAP ANCHOR TO CONCRETE OR MASONRY SUBSTRATES

MATL: ALUM BRAKE MTL

REV. #	DATE	
1	8/17/2023	2023 FBC UPDATE
–	02/11/2021	INITIAL RELEASE
		PRINTS ISSUED FOR

KAWNEER
555 GUTHRIDGE COURT
NORCROSS, GEORGIA 30092
PH. 770-449-5555
WWW.KAWNEER.COM

LUCAS A. TURNER
LICENSE
No. 58201
STATE OF FLORIDA
PROFESSIONAL ENGINEER

8/17/2023
LUCAS A. TURNER
FL P.E. #58201

TURNER ENGINEERING & CONSULTING, INC.
2428 OLD NATCHEZ TRACE TRL.
CAMDEN, TN 38320
PH. 941-380-1574

DRAWING NO. 451UT-Cntr-PreGlaze	PRODUCT TRIFAB 451UT
FPA # FL10008	SECTION 03
DATE 02/11/2021	
SCALE NTS	SHEET 04 OF 08

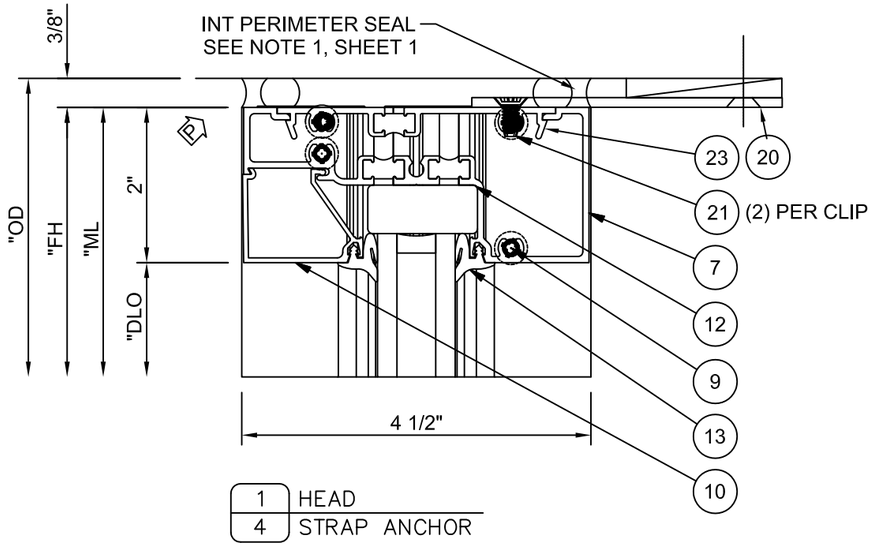

1	HEAD
4	STRAP ANCHOR

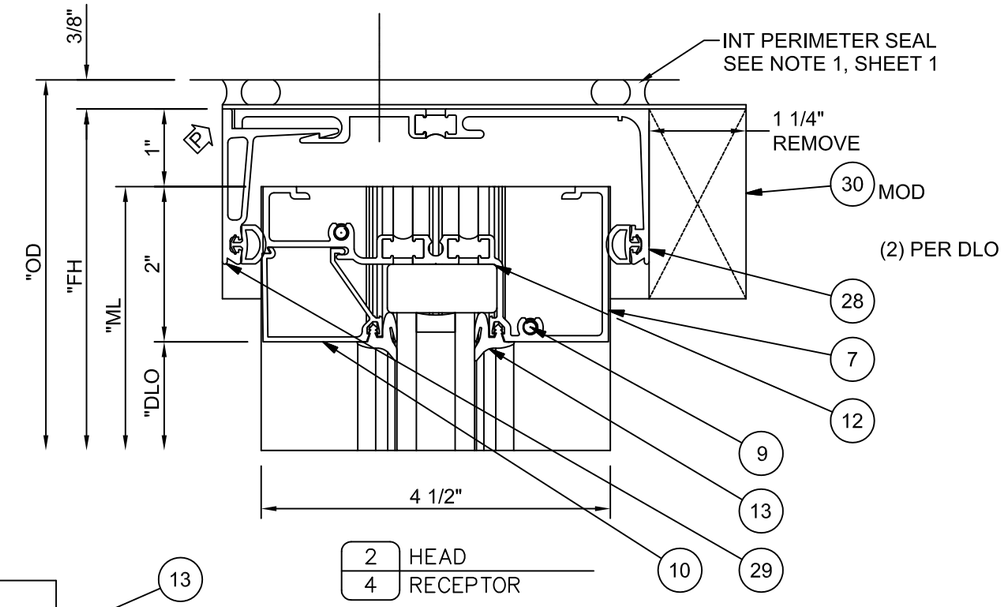

2	HEAD
4	RECEPTOR

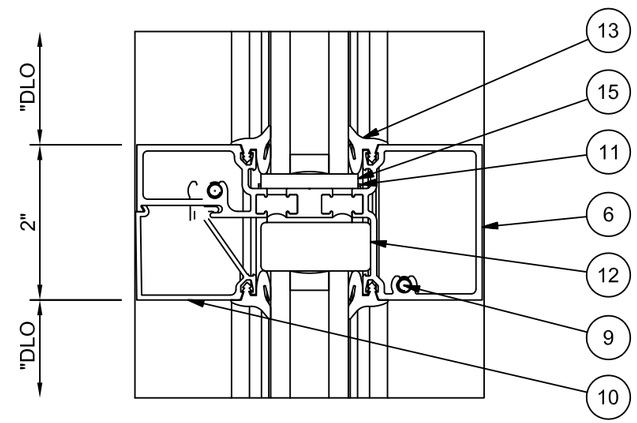

3	INTERMED. HORIZ.
4	

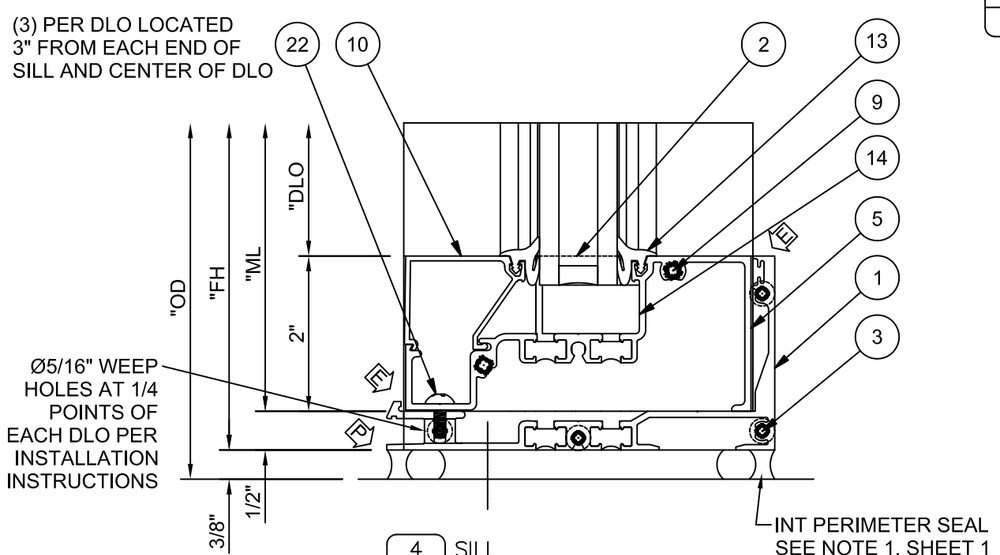

4	SILL
4	W/ SILL SCREWS

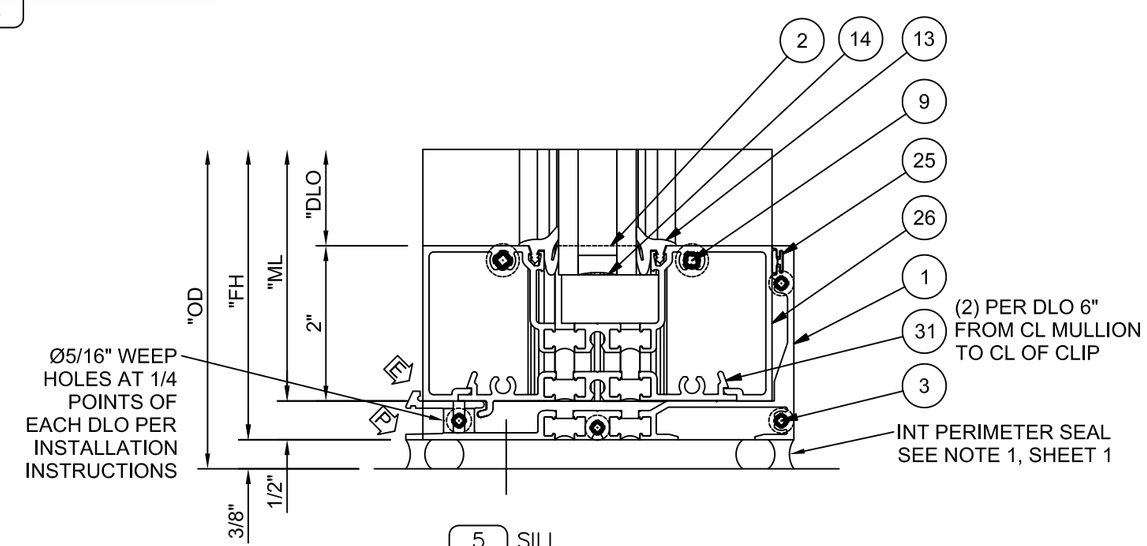

5	SILL
4	W/ CLIPS

REV. #	DATE	
1	8/17/2023	2023 FBC UPDATE
–	02/11/2021	INITIAL RELEASE
		PRINTS ISSUED FOR

KAWNEER
555 GUTHRIDGE COURT
NORCROSS, GEORGIA 30092
PH. 770-449-5555
WWW.KAWNEER.COM

LUCAS A. TURNER
LICENSE
No. 58201
STATE OF FLORIDA
PROFESSIONAL ENGINEER

8/17/2023
LUCAS A. TURNER
FL P.E. #58201

TURNER ENGINEERING &
CONSULTING, INC.
2428 OLD NATCHEZ TRACE TRL.
CAMDEN, TN 38320
PH. 941-380-1574

DRAWING NO. 451UT-Cntr-PreGlaze	PRODUCT TRIFAB 451UT
FPA # FL10008	SECTION 03
DATE 02/11/2021	
SCALE NTS	SHEET 05 OF 08

JAMB AND MULLION LOAD CAPACITY					
DIMENSION			JAMB "J1"	MULLION "M1"	JAMB "J2"
WIDTH "W" (in.)	MULL HEIGHT "H" (in.)	MAX. DLO (in.)	(+/- psf)	(+/- psf)	(+/- psf)
25 1/8	71 1/2	32 1/2	52.5	52.5	52.5
31 1/8			52.5	52.5	52.5
37 1/8			48.9	48.9	48.9
43 7/8			35.0	35.0	35.0
49 1/8			22.3	22.3	22.3
55 1/8			14.0	14.0	14.0
25 1/8	83 1/2	38	52.5	52.5	52.5
31 1/8			52.5	52.5	52.5
37 1/8			46.8	46.8	46.8
43 7/8			35.0	35.0	35.0
49 1/8			22.3	22.3	22.3
25 1/8	95 1/2	43 1/2	52.5	52.5	52.5
31 1/8			45.4	45.4	45.4
37 1/8			39.6	39.6	39.6
43 7/8			35.0	35.0	35.0
25 1/8	107 1/2	49	40.3	40.3	40.3
31 1/8			32.9	32.9	32.9
37 1/8			28.0	28.0	28.0
25 1/8	119 1/2	54 1/2	29.2	29.2	29.2
31 1/8			23.8	23.8	23.8

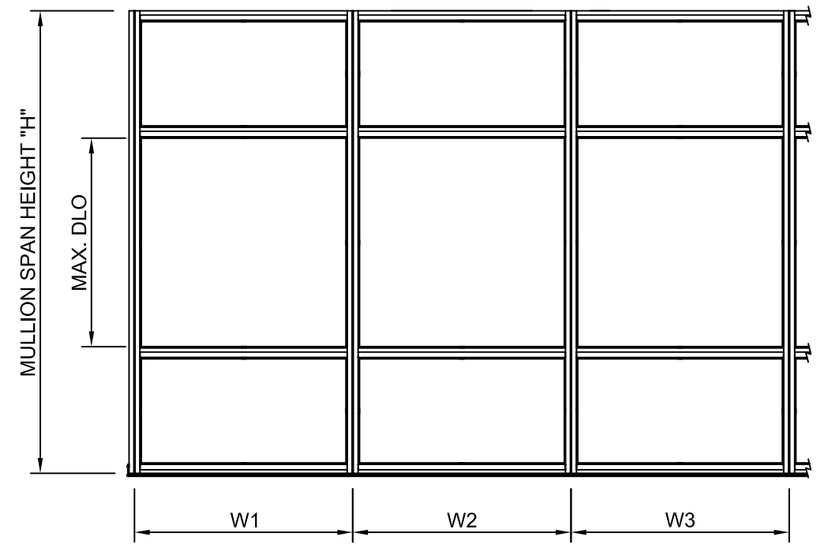

WIDTH "W" = W1 (JAMB)

WIDTH "W" = $\frac{W2 + W3}{2}$ (MULLION)

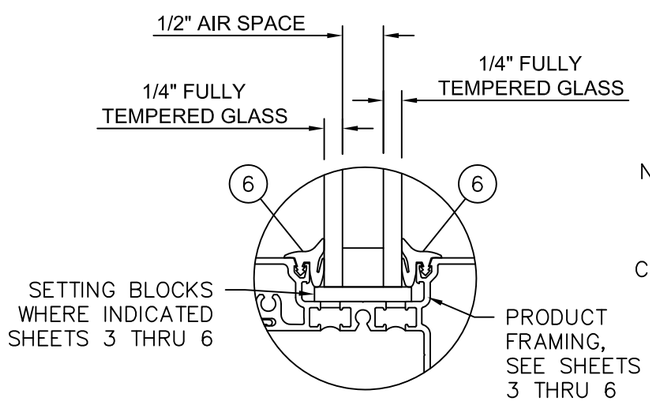

TYP. GLAZING DETAIL

NOTE: GLAZING MEETS OR EXCEEDS MULLION DESIGN PRESSURES INDICATED IN LOAD CAPACITY TABLE ABOVE, IN ALL SIZES.

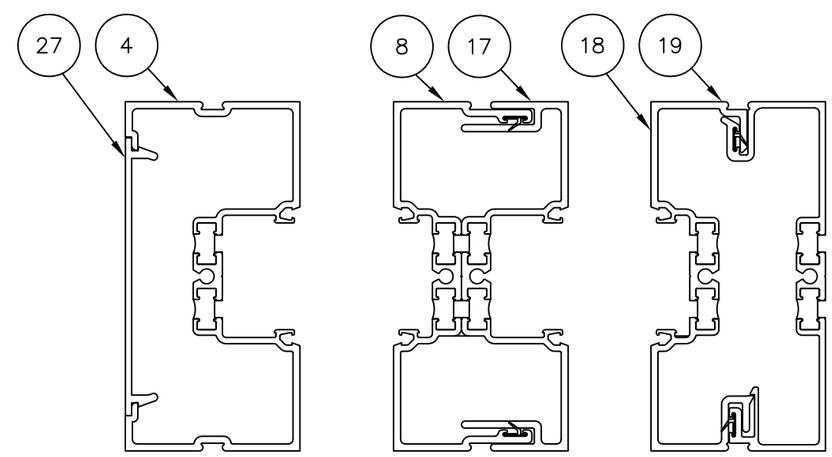

JAMB "J1" | MULLION "M1" | JAMB "J2"

REV. #	DATE	
1	8/17/2023	2023 FBC UPDATE
–	02/11/2021	INITIAL RELEASE
		PRINTS ISSUED FOR

KAWNEER
555 GUTHRIDGE COURT
NORCROSS, GEORGIA 30092
PH. 770-449-5555
WWW.KAWNEER.COM

LUCAS A. TURNER LICENSE No. 58201 STATE OF FLORIDA PROFESSIONAL ENGINEER

8/17/2023
LUCAS A. TURNER
FL P.E. #58201

TURNER ENGINEERING & CONSULTING, INC.
2428 OLD NATCHEZ TRACE TRL.
CAMDEN, TN 38320
PH. 941-380-1574

DRAWING NO. 451UT-Cntr-PreGlaze	PRODUCT TRIFAB 451UT
FPA # FL10008	SECTIONS 04/05
DATE 02/11/2021	
SCALE NTS	SHEET 06 OF 08

TABLE 1. QUALIFIED ANCHOR INFORMATION

ID	SUBSTRATE	ANCHOR	MIN. EMBEDMENT	MIN. EDGE DISTANCE
A	SOLID UNCRACKED CONCRETE (3050 PSI MIN.)	1/4" DEWALT COATED CARBON STEEL ULTRACON+	1 3/4"	2 1/2"
B	CMU (ASTM C-90) (JAMBS ONLY)	1/4" DEWALT COATED CARBON STEEL ULTRACON+	1 3/4"	2 1/2"
C	SOLID UNCRACKED CONCRETE (3350 PSI MIN.)	1/4" DEWALT CRETE-FLEX SS4 MASONRY SCREW	1 3/4"	1"
D	CMU (ASTM C-90) (JAMBS ONLY)	1/4" DEWALT CRETE-FLEX SS4 MASONRY SCREW	1 1/4"	2 1/2"
E	SOLID UNCRACKED CONCRETE (2000 PSI MIN.)	1/4" ITW COATED CARBON STEEL TAPCON	1 1/2"	1 1/2"
F	CMU (DENSITY > 117 PCF) (JAMBS ONLY)	1/4" ITW COATED CARBON STEEL TAPCON	1"	2"
G	CONCRETE (3000 PSI MIN)	1/4" HILTI COATED CARBON STEEL OR STAINLESS STEEL KWIK-CON II	1"	2 1/2"
H	CMU (ASTM C-90)	1/4" HILTI COATED CARBON STEEL OR STAINLESS STEEL KWIK-CON II	1"	2 1/2"
I	2x MIN. SOUTHERN PINE WOOD (G=0.55 MIN)	#14 GRADE 5 WOOD SCREW	1 1/2"	1"
J	16 GAUGE (0.060") MIN. STEEL STUD (33 KSI YIELD MIN.) OR 1/8" MIN. ALUMINUM (6063-T5 MIN.) OR 1/8" MIN. A36 STEEL	#1/4-14 ITW TEKS SELF-DRILLING SCREW	FULL + 3 THREADS	1/2"

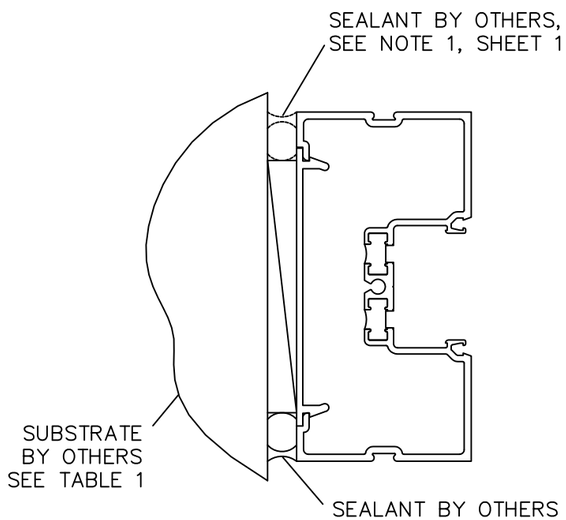

NO JAMB ANCHORAGE

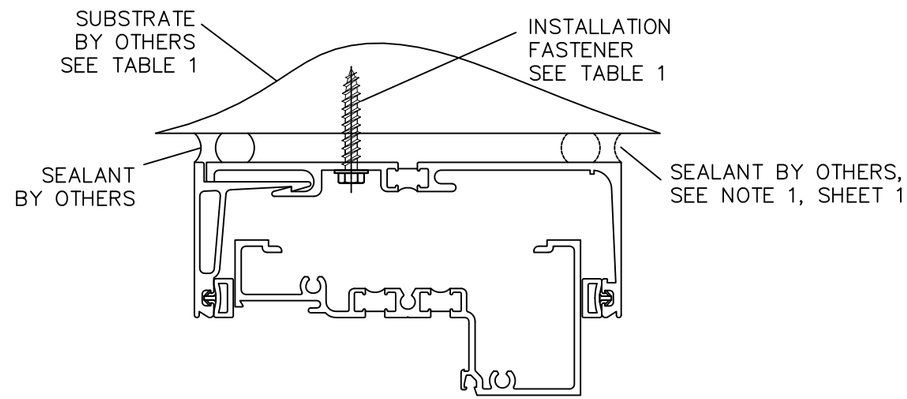

TYP. HEAD ANCHORAGE, RECEPTOR

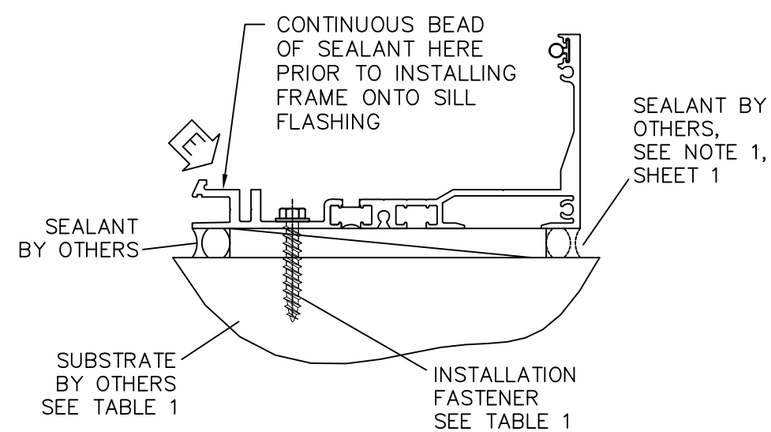

TYP. SILL ANCHORAGE

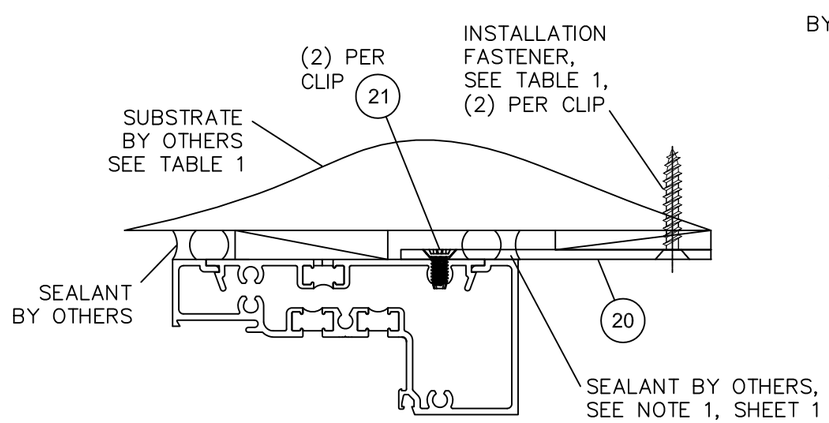

TYP. HEAD ANCHORAGE, STRAP

REV. #	DATE	
1	8/17/2023	2023 FBC UPDATE
–	02/11/2021	INITIAL RELEASE
		PRINTS ISSUED FOR

KAWNEER
555 GUTHRIDGE COURT
NORCROSS, GEORGIA 30092
PH. 770-449-5555
WWW.KAWNEER.COM

LUCAS A. TURNER
LICENSE
No. 58201
STATE OF FLORIDA
PROFESSIONAL ENGINEER

8/17/2023
LUCAS A. TURNER
FL P.E. #58201

TURNER ENGINEERING & CONSULTING, INC.
2428 OLD NATCHEZ TRACE TRL.
CAMDEN, TN 38320
PH. 941-380-1574

DRAWING NO. 451UT-Cntr-PreGlaze	PRODUCT TRIFAB 451UT
FPA # FL10008	SECTION 06
DATE 02/11/2021	
SCALE NTS	SHEET 07 OF 08

ITEM	PART NUMBER	PART DESCRIPTION
1	451UTVG037	451UT SILL FLASHING
2	451TVG316	END DAM / SCREW APPLIED / ABS
3	028808	#8 X 1/2 TYPE I CRPHTFS AB
4	451UTCG080	451UT PG FIRST BAY JAMB STD
5	451UTCG014	451UT SILL / CENTER
6	452TCG011	451UT HORIZONTAL / CENTER
7	452TCG003	451UT HEAD / CENTER
8	451UTCG581	451UTCG081 W/ WEATHERING
9	028856	#12 X 1 1/8 TYPE I CRPHTFS AB
10	451CG004	GLASS STOP / CENTER
11	451105	WATER DEFLECTOR
12	127461	0.625 X 1.413 X 1.413 SET BLK
13	027074	WEDGE GASKET
14	027073	0.625 x 1.25 x 4.125 SET BLOCK
15	027081	SETTING BLK .1875X1.250X4.125
16	027907	SIDE BLOCK
17	451UTCG082	451UT PG MULL HALF DP STD
18	451UTCG083	451UT PG LAST BAY JAMB STD
19	451UTCG584	451UTCG084 W/ WEATHERING
20	STRAP ANCHOR	BY INSTALLER
21	028843	#12 X 1/2 TYPE I CRFCHTFS B
22	128407	10 X 7/16 TYPE I CRPHTFS B
23	451TCG163	451T FLAT FILLER
24	027908	W - BLOCK (0.600)
25	127043	WEATHERING
26	452TCG001	451UT MULLION / CENTER
27	452145	NON-STRUCT SHIM BKR
28	451TVG570	RECEPTOR W/ WEATHERING
29	451VG573	RECEPTOR FACE W/ WEATHERING
30	601CG317	HEAD RECEPTOR END DAM
31	451UTCG365	451UT TALL SILL FILLER CLIP

ALL ALUMINUM COMPONENTS ARE 6063-T6

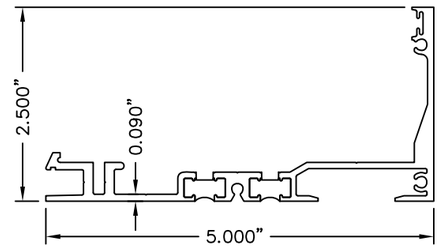

1 451UTVG037

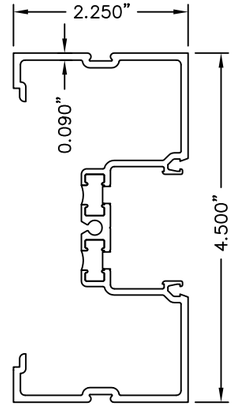

4 451UTCG080

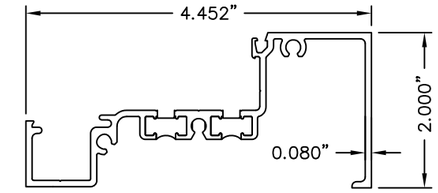

5 451UTCG014

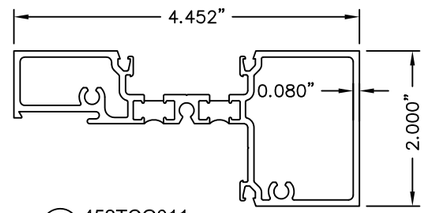

6 452TCG011

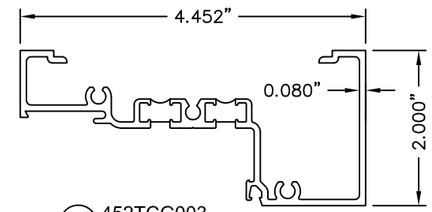

7 452TCG003

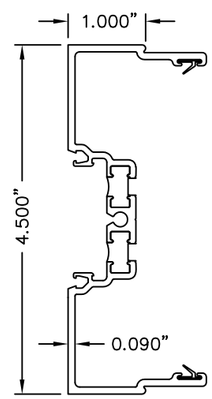

8 451UTCG581

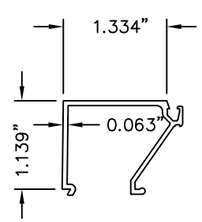

10 451CG004

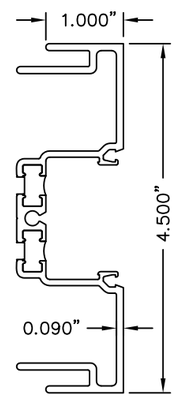

17 451UTCG082

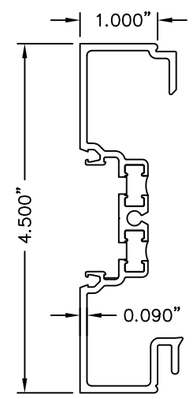

18 451UTCG083

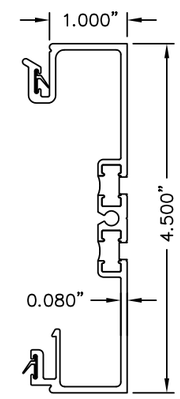

19 451UTCG584

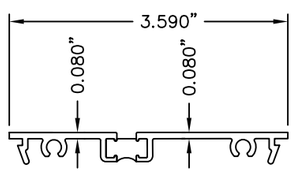

23 451TCG163

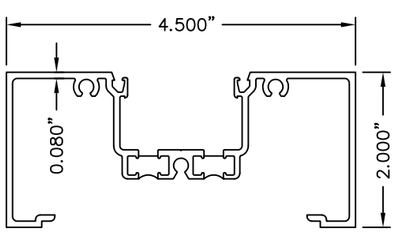

26 452TCG001

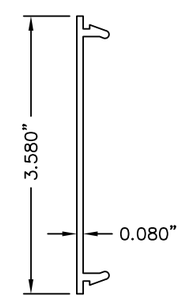

27 452145

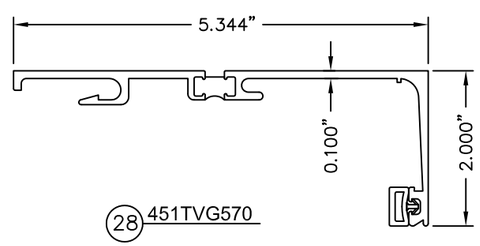

28 451TVG570

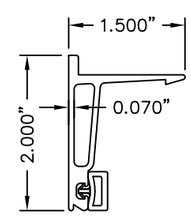

29 451VG573

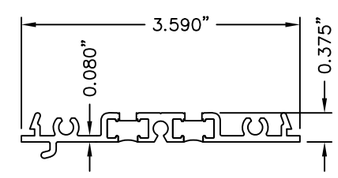

31 451UTCG365

REV. #	DATE	
1	8/17/2023	2023 FBC UPDATE
–	02/11/2021	INITIAL RELEASE
		PRINTS ISSUED FOR

KAWNEER
555 GUTHRIDGE COURT
NORCROSS, GEORGIA 30092
PH. 770-449-5555
WWW.KAWNEER.COM

LUCAS A. TURNER
LICENSE
No. 58201
STATE OF FLORIDA
PROFESSIONAL ENGINEER

8/17/2023
LUCAS A. TURNER
FL P.E. #58201

TURNER ENGINEERING & CONSULTING, INC.
2428 OLD NATCHEZ TRACE TRL.
CAMDEN, TN 38320
PH. 941-380-1574

DRAWING NO. 451UT-Cntr-PreGlaze	PRODUCT TRIFAB 451UT
FPA # FL10008	SECTIONS 07/08
DATE 02/11/2021	
SCALE NTS	SHEET 08 OF 08