MIAMI-DADE COUNTY
PRODUCT CONTROL SECTION
11805 SW 26 Street, Room 208
Miami, Florida 33175-2474
T (786) 315-2590 F (786) 315-2599
www.miamidade.gov/economy

DEPARTMENT OF REGULATORY AND ECONOMIC RESOURCES (RER)
BOARD AND CODE ADMINISTRATION DIVISION

NOTICE OF ACCEPTANCE (NOA)

WinDoor, Incorporated
104 Triple Diamond Blvd.,
North Venice, Fl. 34275

SCOPE:

This NOA is being issued under the applicable rules and regulations governing the use of construction materials. The documentation submitted has been reviewed and accepted by Miami-Dade County PERA -Product Control Section to be used in Miami Dade County and other areas where allowed by the Authority Having Jurisdiction (AHJ).

This NOA shall not be valid after the expiration date stated below. The Miami-Dade County Product Control Section (In Miami Dade County) and/or the AHJ (in areas other than Miami Dade County) reserve the right to have this product or material tested for quality assurance purposes. If this product or material fails to perform in the accepted manner, the manufacturer will incur the expense of such testing and the AHJ may immediately revoke, modify, or suspend the use of such product or material within their jurisdiction. PERA reserves the right to revoke this acceptance, if it is determined by Miami-Dade County Product Control Section that this product or material fails to meet the requirements of the applicable building code.

This product is approved as described herein and has been designed to comply with the Florida Building Code, including the High Velocity Hurricane Zone.

DESCRIPTION: Series "8100" Aluminum Sliding Glass Door W/WO Reinforcements-N.I.

APPROVAL DOCUMENT: Drawing No. **8100-NI-NOA** (former **08-00943),** titled "8100 Series Aluminum SGD, Non-Impact", sheets 1 through 31 of 31, prepared by manufacturer, dated 08/07/20, signed and sealed by Lynn A. Miller, P.E., bearing the Miami-Dade County Product Control Revision stamp with the Notice of Acceptance number and expiration date by the Miami-Dade County Product Control Section.

MISSILE IMPACT RATING: None. Approved Hurricane Protection devices, complying w/ FBC are required.

Limitations:

1. See Design Pressures Vs sizes, reinforcements, sill adapters & glass types in sheets **1** thru **10**.
2. See anchor charts in sheets **11** & **12**.
3. See fixed panel attachment to frame jambs or intermediate panels in sheet **17**. The Z-clip (item #85) at frame jamb and/or at intermediate butt stile interlock, additionally the head cover item #48 and sill cover item #49 are required.
4. Vinyl item # 51 & 52 (TP-1051) of B.O.M. shall meet material properties listed per Bayshore vinyl compound BVC 7200-70, manufactured by Team Plastics.

LABELING: Each unit shall bear a permanent label with the manufacturer's name or logo, city, state and series and following statement: "Miami-Dade County Product Control Approved", unless otherwise noted herein.

RENEWAL of this NOA shall be considered after a renewal application has been filed and there has been no change in the applicable building code negatively affecting the performance of this product.

TERMINATION of this NOA will occur after the expiration date or if there has been a revision or change in the materials, use, and/or manufacture of the product or process. Misuse of this NOA as an endorsement of any product, for sales, advertising or any other purposes shall automatically terminate this NOA. Failure to comply with any section of this NOA shall be cause for termination and removal of NOA.

ADVERTISEMENT: The NOA number preceded by the words Miami-Dade County, Florida, and followed by the expiration date may be displayed in advertising literature. If any portion of the NOA is displayed, then it shall be done in its entirety.

INSPECTION: A copy of this entire NOA shall be provided to the user by the manufacturer or its distributors and shall be available for inspection at the job site at the request of the Building Official.

This NOA **revises & renews** # **19-1219.10** and consists of this page 1 and evidence pages E-1, E-2 and E-3 as well as approval document mentioned above.

The submitted documentation was reviewed by **Ishaq I. Chanda, P.E.**

MIAMI-DADE COUNTY APPROVED

Ishaq I. Chanda

WinDoor, Incorporated

NOTICE OF ACCEPTANCE: EVIDENCE SUBMITTED

1. Evidence submitted in previous files.

A. DRAWINGS

1. Manufacturer's die drawings and sections
2. Drawing No. **08-00943,** titled "8100 Series Alum SGD, Non-Impact, Reinforced & Non-reinforced", sheets 1 through 27 of 27, including sheets 5A, 6A, 7A, 14A, 18A, 20A, 21A & 22A, prepared by manufacturer, dated 02/04/10 and last revised with Revision C dated 06/15/15, signed and sealed by Luis R. Lomas, P.E.

B. TESTS

1. Test reports on 1) Air Infiltration Test, per FBC, TAS 202-94
   2) Uniform Static Air Pressure Test, Loading per FBC TAS 202-94
   3) Water Resistance Test, per FBC, TAS 202-94
   4) Forced Entry Test, per FBC 2411 3.2.1, TAS 202-94

Along with marked-up drawings and installation diagram of Aluminum Sliding Glass, prepared by National Certified Testing Laboratories Inc., Test Report No. **NCTL-210-3570-1**, and **NCTL-210-3570-2,** both dated 12/01/09 and **revised** and **reissued** on 02/04/11, both signed & sealed by Gerald J, Ferrara, P.E.

(Note: This test reports have addendum letters dated 08/16/10, issued by National Certified Testing Laboratories Inc., signed & sealed by Gerald J, Ferrara, P.E.)

2. The 5-tracks extrusion, die # T-32123, T-32124, T-32125 and T-32125D per RER e-mail dated 02-26-15.

C. CALCULATIONS

1. Anchor verification calculations, complying with FBC-2014, dated 06/18/15 and last revised on 03/15/16, prepared, signed and sealed by Luis R. Lomas, P.E.
2. Glazing complies with ASTME-1300-02 &-04.

D. QUALITY ASSURANCE

1. Miami Dade Department of Regulatory and Economic Resources (RER).

E. MATERIAL CERTIFICATIONS

1. Technical data sheet of flexible vinyl compound BVC7200-70, published by Bayshore Vinyl Compounds Inc.

F. STATEMENTS

1. Statement letter of conformance to FBC 2014 (5th Edition) and "No financial interest", dated 06/08/15, prepared, signed and sealed by Luis R. Lomas, P.E.
2. Test lab compliance statement, part of the above referenced reports.
3. Statement addendum letters dated 08/16/10, issued by National Certified Testing Laboratories Inc., signed & sealed by Gerald J, Ferrara, P.E.

Ishaq I. Chanda

Ishaq I. Chanda, P.E.
Product Control Unit Supervisor
NOA No. 20-0814.04
Expiration Date: June 23, 2026
Approval Date: December 03, 2020

NOTICE OF ACCEPTANCE: EVIDENCE SUBMITTED

G. OTHER

1. This NOA **revises** NOA # **12-0130.15**, expiring on June 23, 2021.
2. Test Proposals # **07-3147**, dated Feb. 07, 2008 approved by BCCO.

2. Evidence submitted under previous approval.

A. DRAWINGS

1. Drawing No. **08-00943,** titled "8100 Series Alum SGD, Non-Impact, Reinforced & Non-reinforced", sheets 1 through 27 of 27, prepared by manufacturer, dated 02/04/10 and last revised on 06/27/2018, prepared, signed and sealed by Luis R. Lomas, P.E.

B. Test

1. None.

C. CALCULATIONS

1. Anchor verification dated 11/30/17 complying w/ FBC 2017 (6th Edition), prepared, signed and sealed by Luis R. Lomas, P.E.

D. QUALITY ASSURANCE

1. Miami Dade Department of Regulatory and Economic Resources (RER).

E. MATERIAL CERTIFICATIONS

1. None.

F. STATEMENTS

1. Statement letter of conformance to FBC 2017 (**6th** Edition), dated 11/30/17 prepared, signed and sealed by Luis R. Lomas, P.E.

G. OTHER

1. This NOA **revises # 15-0723.12**, expiring 06/23/21.

3. NEW EVIDENCE SUBMITTED

A. DRAWINGS

1. Drawing No. **8100-NI-NOA** (former **08-00943),** titled "8100 Series Aluminum SGD, Non-Impact", sheets 1 through 31 of 31, prepared by manufacturer, dated 08/07/20, signed and sealed by Lynn A. Miller, P.E.

B. TESTS (This NOA is for Non-Impact- RER Test proposals #**19-1155** dated 01/10/20 approved by Ishaq I. Chanda, P.E.**)**

1. Test reports on: 1) Air Infiltration Test, per FBC, TAS 202-94
   2) Uniform Static Air Pressure Test, Loading per FBC, TAS 202-94
   3) Water Resistance Test, per FBC, TAS 202-94
   4) Large Missile Impact Test per FBC, TAS 201-94
   5) Cyclic Wind Pressure Loading per FBC, TAS 203-94
   6) Forced Entry Test, per ASTM F588 and TAS 202-94

along with marked-up drawings and installation diagram of all Windoor Inc., CGI Windows and Doors, Inc. and PGT Industries, Inc., representative units listed below and tested to qualify **Dowsil 791** and **Dowsil 983** silicones, per Proposal #**19-1155TP**, prepared by Fenestration Testing Laboratory, Inc., Test Reports No.: (Statement of Lab compliance as part of the test report).

Ishaq I. Chanda

Ishaq I. Chanda, P.E.
Product Control Unit Supervisor
NOA No. 20-0814.04
Expiration Date: June 23, 2026
Approval Date: December 03, 2020

B. TESTS (continue):

WinDoor, Inc. test specimens:

FTL-20-2078.1, WinDoor PW3000 Aluminum Fixed Lite (unit 11 in proposal)
FTL-20-2078.2, WinDoor HR9470 Thermally Broken Alum. Horiz. Roller (unit 12)
FTL-20-2078.3, WinDoor SGD8100 Alum. Sliding Glass Door (unit 13 in proposal)
FTL-20-2078.4, WinDoor HR9470 Thermally Broken Alum. Horiz. Roller (unit 14)
FTL-20-2078.5, WinDoor PW9020 Alum. Fixed Lite (unit 15 in proposal) and
FTL-20-2078.6, WinDoor PW9020 Alum. Fixed Lite (unit 16 in proposal), all dated 09/24/20 and signed and sealed by Idalmis Ortega, P.E.

CGI Windows and Doors Inc. test specimens:

FTL-20-2108.1, CGI SH360 Aluminum Single Hung Window (unit 1 in proposal) **FTL-20-2108.2,** CGI CA238 Alum. Outswing Casement Window (unit 2 in proposal) **FTL-20-2108.3,** CGI SGD560 Aluminum Sliding Glass Door (unit 3 in proposal) **FTL-20-2108.4**, CGI PW410 Aluminum Fixed Window (unit 4 in proposal) and **FTL-20-2108.5**, CGI SH360 Aluminum Single Hung Window (unit 5 in proposal)all dated 08/24/20 and signed and sealed by Idalmis Ortega, P.E.

PGT Industries, Inc. test specimens:

FTL-7897, PGT PW5520 PVC Fixed Window (unit 6 in proposal), dated 09/03/14
FTL-20-2107.1, PGT SGD780 Aluminum Sliding Glass Door (unit 7 in proposal) **FTL-20-2107.2,** PGT CA740 Alum. Outswing Casement Window (unit 8 in proposal) **FTL-20-2107.3,** PGT PW7620A Aluminum Fixed Window (unit 9 in proposal) and **FTL-20-2107.4**, PGT PW7620A Aluminum Fixed Window (unit 10 in proposal) all dated 07/13/20 and signed and sealed by Idalmis Ortega, P.E.

C. CALCULATIONS

1. Anchor verification calculations and structural analysis, complying with **FBC 7th Edition (2020)**, dated 08/06/20, prepared by manufacturer, signed and sealed by Anthony Lynn Miller, P.E.
2. Glazing complies with **ASTM E1300-04, -09, -12 and -16.**

D. QUALITY ASSURANCE

1. Miami Dade Department of Regulatory and Economic Resources (RER).

E. MATERIAL CERTIFICATIONS

1. Technical data sheet of flexible vinyl compound BVC7200-70, published by Bayshore Vinyl Compounds Inc.

F. STATEMENTS

1. Statement letters of conformance to FBC 2020(**7th** Edition) and "No financial interest", dated 08/06/20, prepared, signed & sealed by Lynn Miller, P. E.
2. Notification of Successor Engineer per the Florida Administrative Code Section 61G15-27.001, notifying original engineer that the successor engineer is assuming full professional and legal responsibility for all engineering documents pertaining to this NOA, dated 07/29/20, signed and sealed by A. Lynn Miller, P.E.

G. OTHER

1. This NOA **revises & renews NOA No. 17-1219.10** and updates to FBC 2020 (7th Edition) expiring 06/23/26.

Ishaq I. Chanda

Ishaq I. Chanda, P.E.
Product Control Unit Supervisor
NOA No. 20-0814.04
Expiration Date: June 23, 2026
Approval Date: December 03, 2020

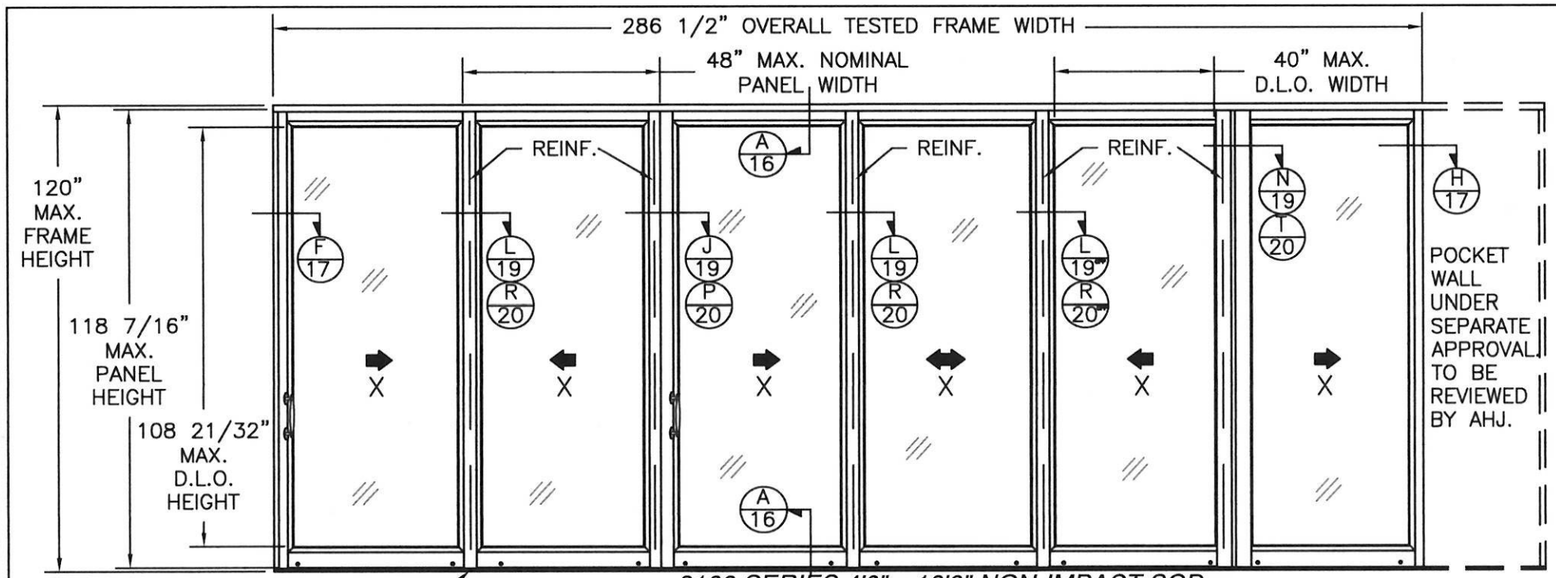

8100 SERIES 4'0" x 10'0" NON-IMPACT SGD

TYPICAL ELEVATION EXTERIOR VIEW

(6) PANELS SHOWN. UNLIMITED NUMBER OF PANELS IN UNLIMITED CONFIGURATIONS IS APPLICABLE AS LONG AS INDIVIDUAL PANEL SIZE DOES NOT EXCEED MAXIMUM PANEL SIZE AND USE VERTICAL CONDITIONS AS SHOWN. MAXIMUM AREA OF ALTERNATE SIZES MUST NOT EXCEED FRAME AREA OF 360 SQ.FT.

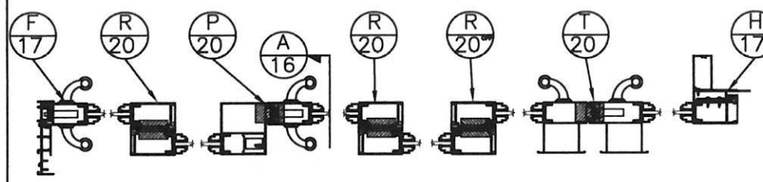

8100 SERIES 4'0" x 10'0" NON-IMPACT NON-REINFORCED SGD

2 TRACK LAYOUT

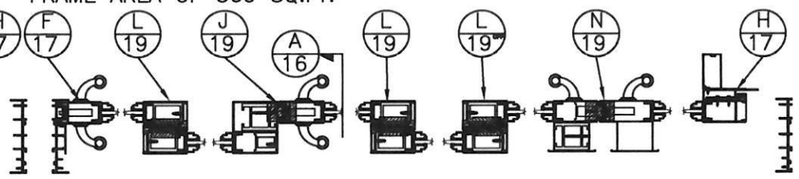

8100 SERIES 4'0" x 10'0" NON-IMPACT REINFORCED SGD

2 TRACK LAYOUT

NON-REINFORCED UNIT W/ 2-1/4", 3", 3-1/2" & 4-1/4" SILL RISERS

DESIGN PRESSURE RATING	IMPACT RATING
±50.0PSF	NONE

FOR WOOD, MASONRY/CONCRETE & METAL INSTALLATION
FOR ADDITIONAL SIZES, RISERS AND RATINGS,
SEE SHEET 9

REINFORCED UNIT W/ 3-1/2" & 4-1/4" SILL RISER

DESIGN PRESSURE RATING	IMPACT RATING
±100.0PSF	NONE

FOR MASONRY/CONCRETE & METAL INSTALLATION
FOR ADDITIONAL SIZES, RISERS AND RATINGS,
SEE SHEET 10

REINFORCED UNIT W/ 3", 3-1/2" & 4-1/4" SILL RISERS

DESIGN PRESSURE RATING	IMPACT RATING
±72.0PSF	NONE

FOR WOOD INSTALLATION
FOR ADDITIONAL SIZES, RISERS AND RATINGS,
SEE SHEET 10

PANEL HEIGHT AND D.L.O. FORMULA
PANEL HEIGHT = UNIT HEIGHT − 1 9/16"
MAXIMUM D.L.O. HEIGHT = PANEL HEIGHT − 9 1/2"
D.L.O. WIDTH = NOMINAL PANEL WIDTH − 9 1/2"

NOTES:

1. THE PRODUCT SHOWN HEREIN IS DESIGNED AND MANUFACTURED TO COMPLY WITH REQUIREMENTS OF THE FLORIDA BUILDING CODE 6TH EDITION (2017) AND 7TH EDITION (2020) INCLUDING THE HVHZ.
2. 1X OR 2X WOOD FRAMING, 20 GA. 2X WOOD BACKED STEEL STUD AND MASONRY/CONCRETE OPENING TO BE DESIGNED AND ANCHORED TO PROPERLY TRANSFER ALL LOADS TO STRUCTURE. FRAMING AND MASONRY OPENING IS THE RESPONSIBILITY OF THE ARCHITECT OR ENGINEER OF RECORD, TO BE REVIEWED BY AHJ.
3. 1X BUCK PROPERLY SECURED OVER MASONRY/CONCRETE IS OPTIONAL.
4. ALLOWABLE STRESS INCREASE OF 1/3 WAS NOT USED IN THE DESIGN OF THE PRODUCT SHOWN HEREIN. WIND LOAD DURATION FACTOR Cd=1.6 WAS USED FOR WOOD ANCHOR CALCULATIONS.
5. FRAME MATERIAL: EXTRUDED ALUMINUM 6063−T6 .075" THICK.
   PANEL MATERIAL: EXTRUDED ALUMINUM 6063−T6 .080" THICK.
6. UNITS MUST BE GLAZED WITH LARGE MISSILE IMPACT SINGLE LAMINATED OR INSULATED LAMINATED GLASS AS SHOWN IN GLAZING DETAILS ON SHEET 15, PER ASTM E1300−04.
7. APPROVED IMPACT PROTECTIVE SYSTEM IS REQUIRED FOR THIS PRODUCT IN AREAS WHERE WIND BORNE DEBRIS PROTECTION IS REQUIRED.
8. APPROVED TO BE INSTALLED ON A 2 TRACK, 3 TRACK, 4 TRACK OR 5 TRACK FRAME SYSTEM WITH OR WITHOUT POCKETS.

TABLE OF CONTENTS

SHEET NO.	DESCRIPTION
1	GENERAL NOTES
1-8	ELEVATIONS
9-10	DP CHARTS
11-13	ANCHOR LAYOUT & NOTES
14-15	BOM & GLAZING DETAILS
17-24	SECTION VIEWS
25-31	INSTALLATION DETAILS
32-35	EXTRUSIONS

PRODUCT REVISED
as complying with the Florida Building Code
NOA-No. 20-0814.04
Expiration Date 06/23/2026
By Ishwaj I. Chanda
Miami-Dade Product Control

Revision: UPDATES FOR 2020 FBC. UPDATED MANUFACTURING ADDRESS.

PREPARED BY A. LYNN MILLER
1070 TECHNOLOGY DRIVE
N. VENICE, FL 34275
(941) 480-1600
REGISTRATION #29296

WINDOOR® INCORPORATED
WINDOOR INCORPORATED
104 TRIPLE DIAMOND BLVD.
NORTH VENICE, FL 34275
(833) 554-5432

Title	ALUMINUM SLIDING GLASS DOOR (NON-IMPACT)	Date	08/07/20	Rev.
Desc.	ELEV. & DP @ MAX SIZE - 4'x10' 2T	Drawn By	ERIN KOSS	
Series	SGD8100A	Sheet	1 OF 35	DWG No. 8100-NI-NOA

ANTHONY LYNN MILLER
LICENSE
No. 58705
8/7/20
STATE OF FLORIDA
PROFESSIONAL ENGINEER

A. LYNN MILLER, P.E.
P.E.# 58705

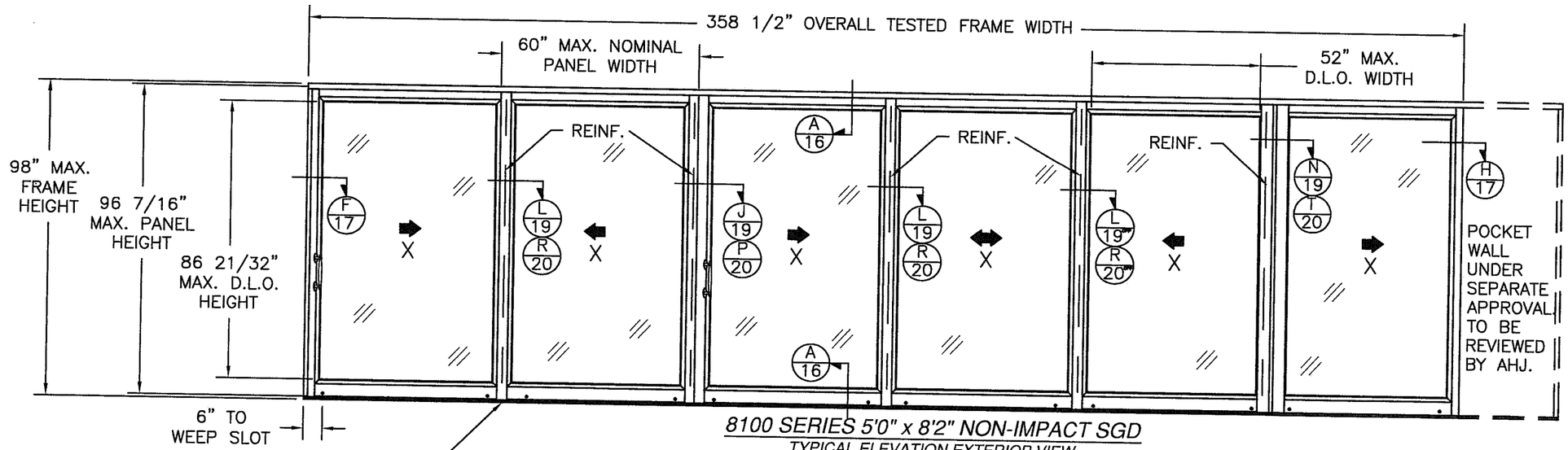

8100 SERIES 5'0" x 8'2" NON-IMPACT SGD

TYPICAL ELEVATION EXTERIOR VIEW

(6) PANELS SHOWN. UNLIMITED NUMBER OF PANELS IN UNLIMITED CONFIGURATIONS IS APPLICABLE AS LONG AS INDIVIDUAL PANEL SIZE DOES NOT EXCEED MAXIMUM PANEL SIZE AND USE VERTICAL CONDITIONS AS SHOWN. MAXIMUM AREA OF ALTERNATE SIZES MUST NOT EXCEED FRAME AREA OF 360 SQ.FT.

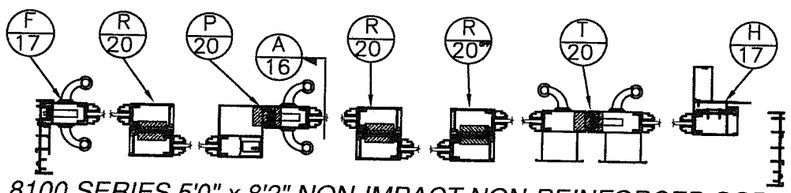

8100 SERIES 5'0" x 8'2" NON-IMPACT NON-REINFORCED SGD

2 TRACK LAYOUT

NON-REINFORCED UNIT W/ 2-1/2", 3", 3-1/2" & 4-1/4" SILL RISERS

DESIGN PRESSURE RATING	IMPACT RATING
±50.0PSF	NONE

FOR WOOD, MASONRY/CONCRETE & METAL INSTALLATION
FOR ADDITIONAL SIZES, RISERS AND RATINGS,
SEE SHEET 9

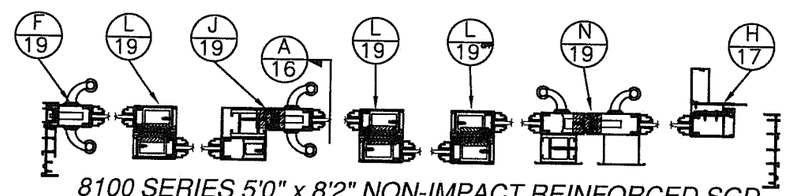

8100 SERIES 5'0" x 8'2" NON-IMPACT REINFORCED SGD

2 TRACK LAYOUT

REINFORCED UNIT W/ 3-1/2" & 4-1/4" SILL RISER

DESIGN PRESSURE RATING	IMPACT RATING
±100.0PSF	NONE

FOR MASONRY/CONCRETE & METAL INSTALLATION
FOR ADDITIONAL SIZES, RISERS AND RATINGS,
SEE SHEET 10

REINFORCED UNIT W/ 3-1/2" & 4-1/4" SILL RISERS

DESIGN PRESSURE RATING	IMPACT RATING
±81.3PSF	NONE

FOR WOOD INSTALLATION
FOR ADDITIONAL SIZES, RISERS AND RATINGS,
SEE SHEET 10

PANEL HEIGHT AND D.L.O. FORMULA
PANEL HEIGHT = UNIT HEIGHT – 1 9/16"
MAXIMUM D.L.O. HEIGHT = PANEL HEIGHT – 9 1/2"
D.L.O. WIDTH = NOMINAL PANEL WIDTH – 9 1/2"

PRODUCT REVISED
as complying with the Florida Building Code
NOA-No. 20-0814.04
Expiration Date 06/23/2026
By Ishaq I. Chanda
Miami-Dade Product Control

Revision: NO CHANGES THIS SHEET.

PREPARED BY A. LYNN MILLER
1070 TECHNOLOGY DRIVE
N. VENICE, FL 34275
(941) 480-1600
REGISTRATION #29296

WINDOOR® INCORPORATED
WINDOOR INCORPORATED
104 TRIPLE DIAMOND BLVD.
NORTH VENICE, FL 34275
(833) 554-5432

Series	Desc.	Title	Sheet	DWG No.	Drawn By	Date	Rev.
SGD8100A	ELEV. & DP @ MAX SIZE - 5'x8'2" 2T	ALUMINUM SLIDING GLASS DOOR (NON-IMPACT)	2 OF 35	8100-NI-NOA	ERIN KOSS	08/07/20	

ANTHONY LYNN MILLER LICENSE No. 58705 STATE OF FLORIDA PROFESSIONAL ENGINEER
8/7/20
A. LYNN MILLER, P.E.
P.E.# 58705

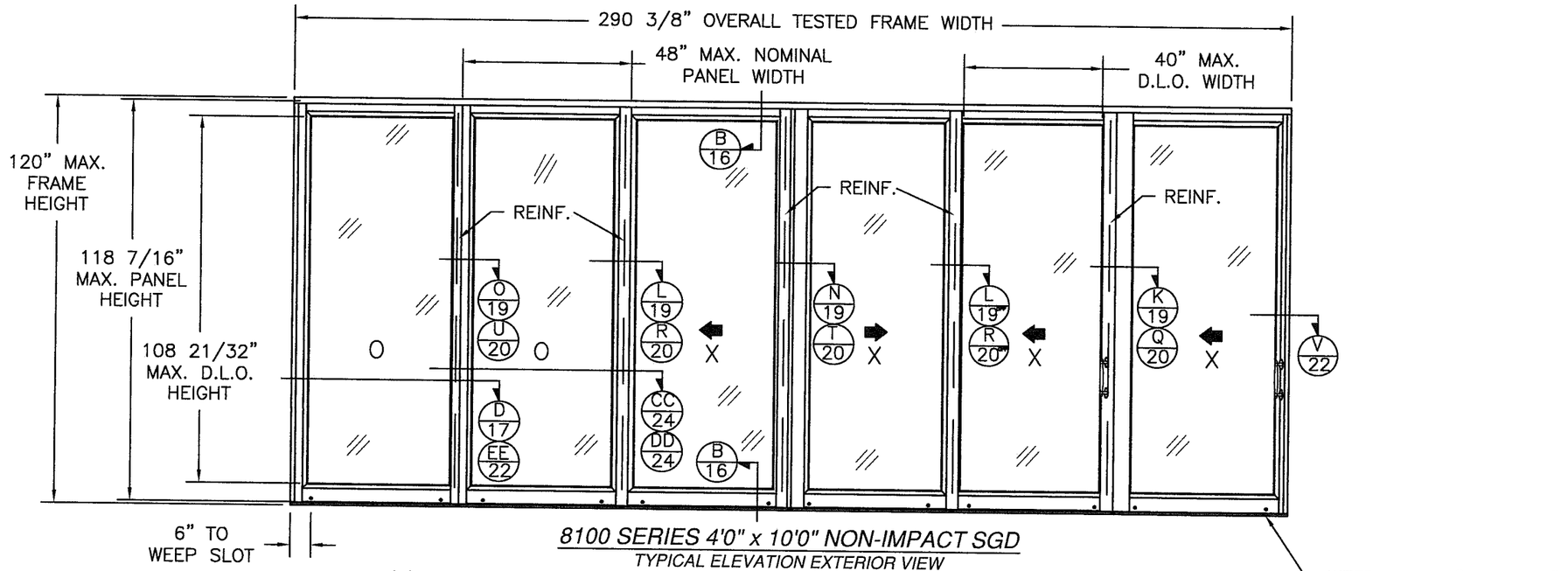

8100 SERIES 4'0" x 10'0" NON-IMPACT SGD

TYPICAL ELEVATION EXTERIOR VIEW

(6) PANELS SHOWN. UNLIMITED NUMBER OF PANELS IN UNLIMITED CONFIGURATIONS IS APPLICABLE AS LONG AS INDIVIDUAL PANEL SIZE DOES NOT EXCEED MAXIMUM PANEL SIZE AND USE VERTICAL CONDITIONS AS SHOWN. MAXIMUM AREA OF ALTERNATE SIZES MUST NOT EXCEED FRAME AREA OF 360 SQ.FT.

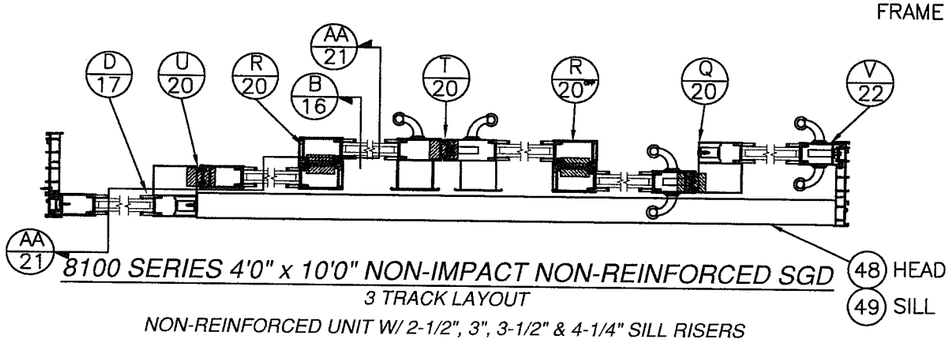

8100 SERIES 4'0" x 10'0" NON-IMPACT NON-REINFORCED SGD

3 TRACK LAYOUT

NON-REINFORCED UNIT W/ 2-1/2", 3", 3-1/2" & 4-1/4" SILL RISERS

DESIGN PRESSURE RATING	IMPACT RATING
±50.0PSF	NONE

FOR WOOD, MASONRY/CONCRETE & METAL INSTALLATION
FOR ADDITIONAL SIZES, RISERS AND RATINGS,
SEE SHEET 9

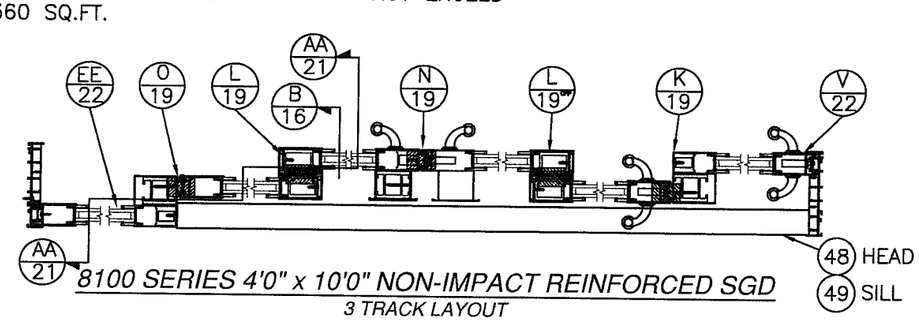

8100 SERIES 4'0" x 10'0" NON-IMPACT REINFORCED SGD

3 TRACK LAYOUT

REINFORCED UNIT W/ 3-1/2" & 4-1/4" SILL RISER

DESIGN PRESSURE RATING	IMPACT RATING
±100.0PSF	NONE

FOR MASONRY/CONCRETE & METAL INSTALLATION
FOR ADDITIONAL SIZES, RISERS AND RATINGS,
SEE SHEET 10

REINFORCED UNIT W/ 3", 3-1/2" & 4-1/4" SILL RISERS

DESIGN PRESSURE RATING	IMPACT RATING
±72.0PSF	NONE

FOR WOOD INSTALLATION
FOR ADDITIONAL SIZES, RISERS AND RATINGS,
SEE SHEET 10

PANEL HEIGHT AND D.L.O. FORMULA
PANEL HEIGHT = UNIT HEIGHT – 1 9/16"
MAXIMUM D.L.O. HEIGHT = PANEL HEIGHT – 9 1/2"
D.L.O. WIDTH = NOMINAL PANEL WIDTH – 9 1/2"

PRODUCT REVISED
as complying with the Florida Building Code
NOA-No. 20-0814.04
Expiration Date 06/23/2026
By Ishaq I. Chanda
Miami-Dade Product Control

Revision: NO CHANGES THIS SHEET.

PREPARED BY A. LYNN MILLER
1070 TECHNOLOGY DRIVE
N. VENICE, FL 34275
(941) 480-1600
REGISTRATION #29296

Rev.	Date	Drawn By	DWG No.	Sheet	Series	Desc.	Title
	08/07/20	ERIN KOSS	8100-NI-NOA	3 OF 35	SGD8100A	ELEV. & DP @ MAX SIZE - 4'x10' 3T	ALUMINUM SLIDING GLASS DOOR (NON-IMPACT)

WINDOOR® INCORPORATED
WINDOOR INCORPORATED
104 TRIPLE DIAMOND BLVD.
NORTH VENICE, FL 34275
(833) 554-5432

ANTHONY LYNN MILLER
LICENSE
No. 58705
STATE OF FLORIDA
PROFESSIONAL ENGINEER
8/7/20

A. LYNN MILLER, P.E.
P.E.# 58705

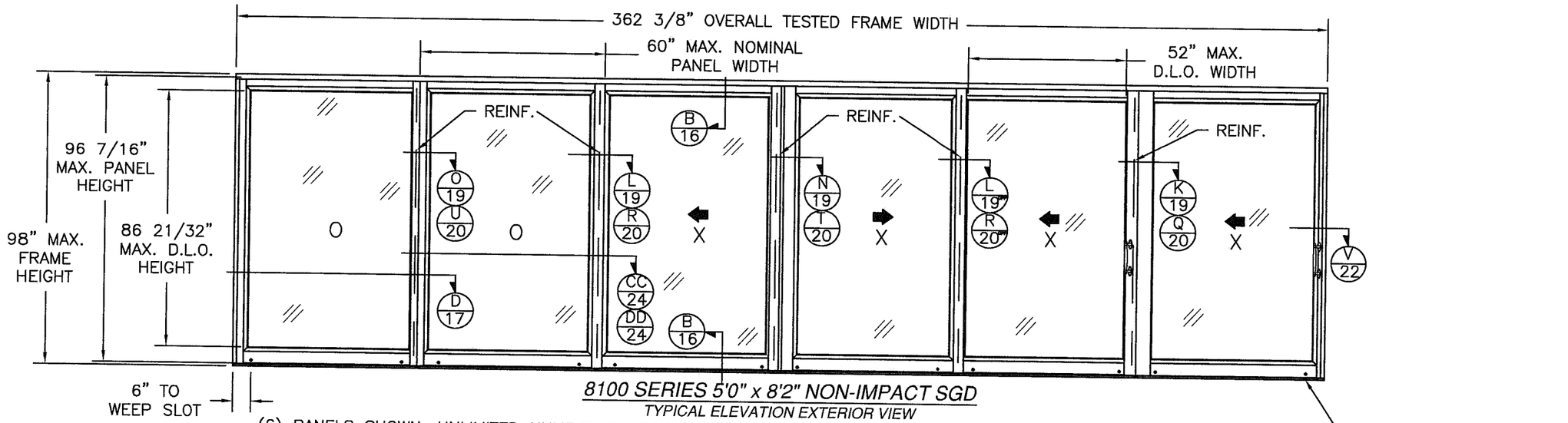

8100 SERIES 5'0" x 8'2" NON-IMPACT SGD

TYPICAL ELEVATION EXTERIOR VIEW

(6) PANELS SHOWN. UNLIMITED NUMBER OF PANELS IN UNLIMITED CONFIGURATIONS IS APPLICABLE AS LONG AS INDIVIDUAL PANEL SIZE DOES NOT EXCEED MAXIMUM PANEL SIZE AND USE VERTICAL CONDITIONS AS SHOWN. MAXIMUM AREA OF ALTERNATE SIZES MUST NOT EXCEED FRAME AREA OF 360 SQ.FT.

WEEP SLOT 1" x .1875" TYP. LOCATED AT ALL VERTICAL CENTER LINES

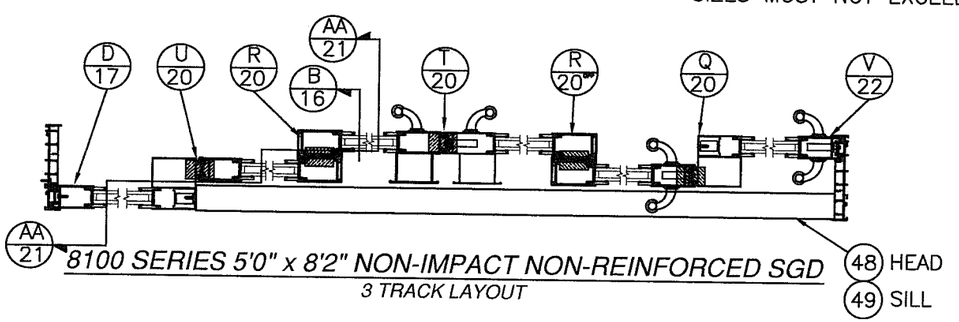

8100 SERIES 5'0" x 8'2" NON-IMPACT NON-REINFORCED SGD

3 TRACK LAYOUT

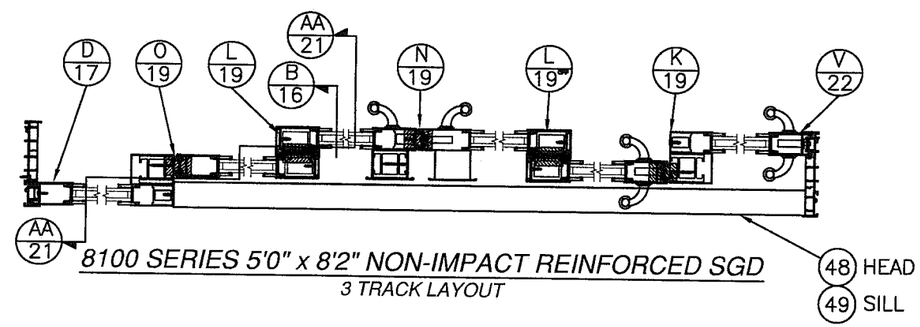

8100 SERIES 5'0" x 8'2" NON-IMPACT REINFORCED SGD

3 TRACK LAYOUT

NON-REINFORCED UNIT W/ 2-1/2", 3", 3-1/2" & 4-1/4" SILL RISERS

DESIGN PRESSURE RATING	IMPACT RATING
±50.0PSF	NONE

FOR WOOD, MASONRY/CONCRETE & METAL INSTALLATION
FOR ADDITIONAL SIZES, RISERS AND RATINGS,
SEE SHEET 9

REINFORCED UNIT W/ 3-1/2" & 4-1/4" SILL RISER

DESIGN PRESSURE RATING	IMPACT RATING
±100.0PSF	NONE

FOR MASONRY/CONCRETE & METAL INSTALLATION
FOR ADDITIONAL SIZES, RISERS AND RATINGS,
SEE SHEET 10

REINFORCED UNIT W/ 3-1/2" & 4-1/4" SILL RISERS

DESIGN PRESSURE RATING	IMPACT RATING
±81.3PSF	NONE

FOR WOOD INSTALLATION
FOR ADDITIONAL SIZES, RISERS AND RATINGS,
SEE SHEET 10

PANEL HEIGHT AND D.L.O. FORMULA
PANEL HEIGHT = UNIT HEIGHT – 1 9/16"
MAXIMUM D.L.O. HEIGHT = PANEL HEIGHT – 9 1/2"
D.L.O. WIDTH = NOMINAL PANEL WIDTH – 9 1/2"

PRODUCT REVISED
as complying with the Florida Building Code
NOA-No. 20-0814.04
Expiration Date 06/23/2026
By Ishaq I. Chanda
Miami-Dade Product Control

Revision: NO CHANGES THIS SHEET.

PREPARED BY A. LYNN MILLER
1070 TECHNOLOGY DRIVE
N. VENICE, FL 34275
(941) 480-1600
REGISTRATION #29296

Date 08/07/20
Drawn By ERIN KOSS
Rev.
DWG No. 8100-NI-NOA
Sheet 4 OF 35

WINDOOR® INCORPORATED
WINDOOR INCORPORATED
104 TRIPLE DIAMOND BLVD.
NORTH VENICE, FL 34275
(833) 554-5432

Title: ALUMINUM SLIDING GLASS DOOR (NON-IMPACT)
Desc.: ELEV. & DP @ MAX SIZE - 5'x8'2" 3T
Series: SGD8100A

ANTHONY LYNN MILLER
LICENSE
No. 58705
STATE OF FLORIDA
PROFESSIONAL ENGINEER
8/7/20

A. LYNN MILLER, P.E.
P.E.# 58705

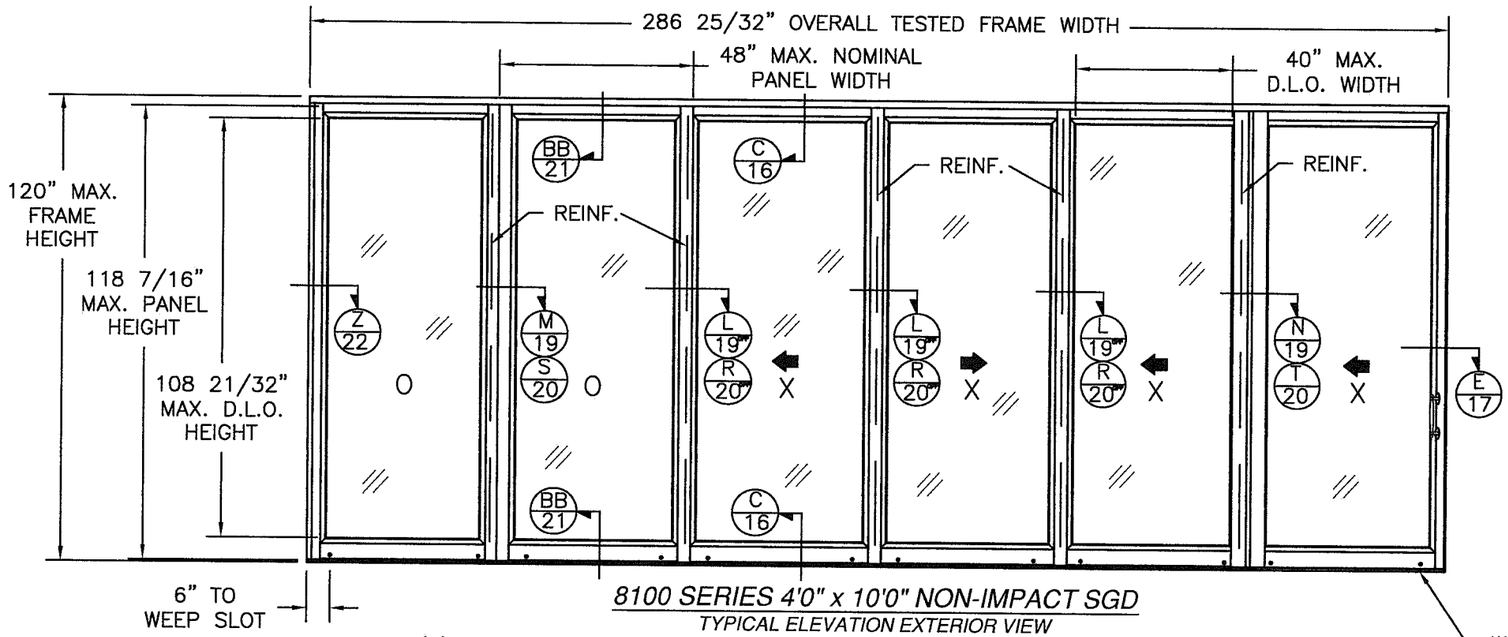

8100 SERIES 4'0" x 10'0" NON-IMPACT SGD

TYPICAL ELEVATION EXTERIOR VIEW

(6) PANELS SHOWN. UNLIMITED NUMBER OF PANELS IN UNLIMITED CONFIGURATIONS IS APPLICABLE AS LONG AS INDIVIDUAL PANEL SIZE DOES NOT EXCEED MAXIMUM PANEL SIZE AND USE VERTICAL CONDITIONS AS SHOWN. MAXIMUM AREA OF ALTERNATE SIZES MUST NOT EXCEED FRAME AREA OF 360 SQ.FT.

WEEP SLOT 1" x .1875" TYP. LOCATED AT ALL VERTICAL CENTER LINES

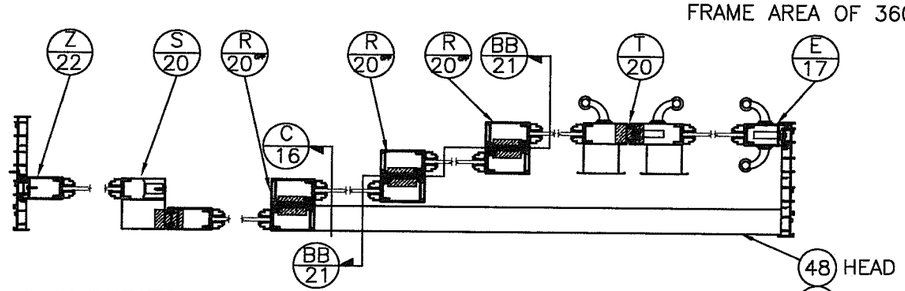

8100 SERIES 4'0" x 10'0" NON-IMPACT NON-REINFORCED SGD

4 TRACK LAYOUT

NON-REINFORCED UNIT W/ 2-1/4", 3", 3-1/2" & 4-1/4" SILL RISERS

DESIGN PRESSURE RATING	IMPACT RATING
±50.0PSF	NONE

FOR WOOD, MASONRY/CONCRETE & METAL INSTALLATION
FOR ADDITIONAL SIZES, RISERS AND RATINGS, SEE SHEET 9

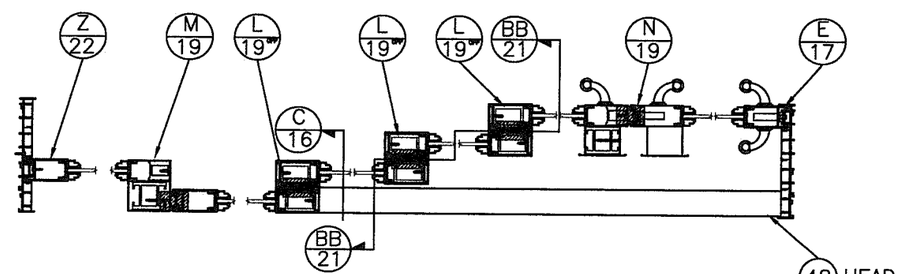

8100 SERIES 4'0" x 10'0" NON-IMPACT REINFORCED SGD

4 TRACK LAYOUT

REINFORCED UNIT W/ 3-1/2 & 4-1/4" SILL RISER

DESIGN PRESSURE RATING	IMPACT RATING
±100.0PSF	NONE

FOR MASONRY/CONCRETE & METAL INSTALLATION
FOR ADDITIONAL SIZES, RISERS AND RATINGS, SEE SHEET 10

REINFORCED UNIT W/ 3", 3-1/2" & 4-1/4" SILL RISERS

DESIGN PRESSURE RATING	IMPACT RATING
±72.0PSF	NONE

FOR WOOD INSTALLATION
FOR ADDITIONAL SIZES, RISERS AND RATINGS, SEE SHEET 10

PANEL HEIGHT AND D.L.O. FORMULA
PANEL HEIGHT = UNIT HEIGHT – 1 9/16"
MAXIMUM D.L.O. HEIGHT = PANEL HEIGHT – 9 1/2"
D.L.O. WIDTH = NOMINAL PANEL WIDTH – 9 1/2"

PRODUCT REVISED
as complying with the Florida Building Code
NOA-No. 20-0814.04
Expiration Date 06/23/2026
By Ishaq I. Chanda
Miami-Dade Product Control

Revision: NO CHANGES THIS SHEET.

WINDOOR® INCORPORATED
WINDOOR INCORPORATED
104 TRIPLE DIAMOND BLVD.
NORTH VENICE, FL 34275
(833) 554-5432

PREPARED BY A. LYNN MILLER
1070 TECHNOLOGY DRIVE
N. VENICE, FL 34275
(941) 480-1600
REGISTRATION #29296

Series	Desc.	Title	Sheet	DWG No.	Drawn By	Date	Rev.
SGD8100A	ELEV. & DP @ MAX SIZE - 4'x10' 4T	ALUMINUM SLIDING GLASS DOOR (NON-IMPACT)	5 OF 35	8100-NI-NOA	ERIN KOSS	08/07/20	

ANTHONY LYNN MILLER
LICENSE
No. 58705
STATE OF FLORIDA
PROFESSIONAL ENGINEER
8/7/20

A. LYNN MILLER, P.E.
P.E.# 58705

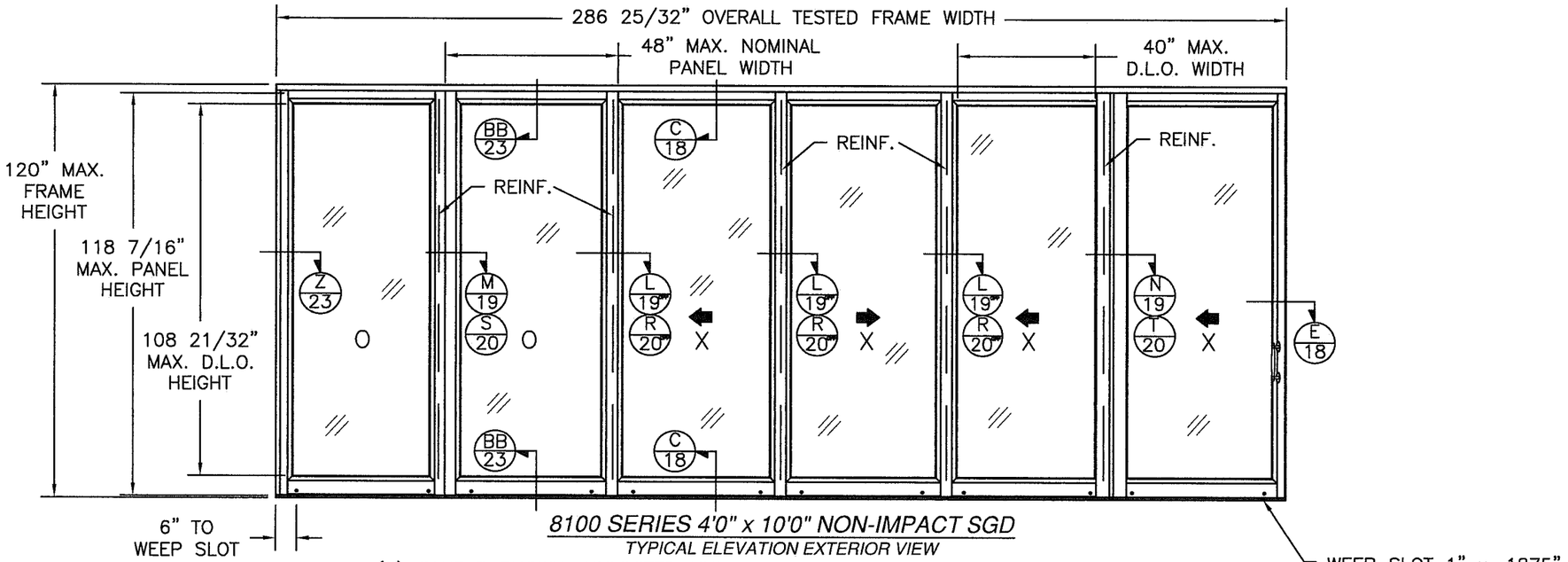

8100 SERIES 4'0" x 10'0" NON-IMPACT SGD

TYPICAL ELEVATION EXTERIOR VIEW

(6) PANELS SHOWN. UNLIMITED NUMBER OF PANELS IN UNLIMITED CONFIGURATIONS IS APPLICABLE AS LONG AS INDIVIDUAL PANEL SIZE DOES NOT EXCEED MAXIMUM PANEL SIZE AND USE VERTICAL CONDITIONS AS SHOWN. MAXIMUM AREA OF ALTERNATE SIZES MUST NOT EXCEED FRAME AREA OF 360 SQ.FT.

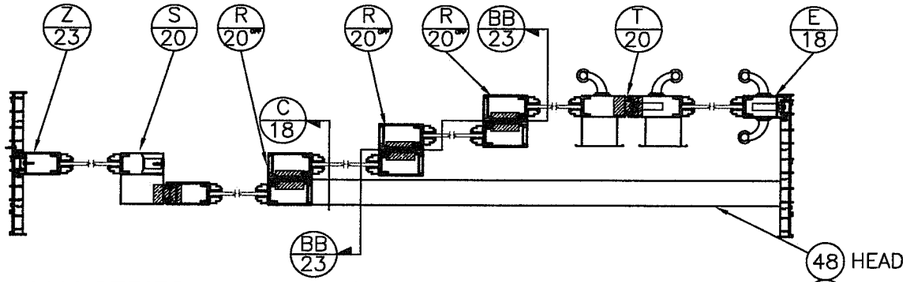

8100 SERIES 4'0" x 10'0" NON-IMPACT NON-REINFORCED SGD

5 TRACK LAYOUT

NON-REINFORCED UNIT W/ 2-1/2", 3", 3-1/2" & 4-1/4" SILL RISERS

DESIGN PRESSURE RATING	IMPACT RATING
±50.0PSF	NONE

FOR WOOD, MASONRY/CONCRETE & METAL INSTALLATION
FOR ADDITIONAL SIZES, RISERS AND RATINGS,
SEE SHEET 9

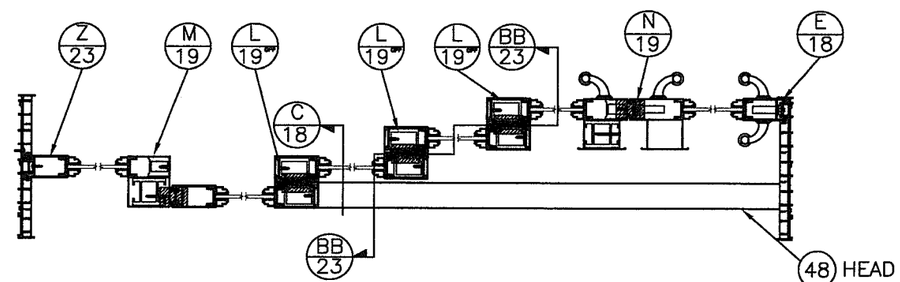

8100 SERIES 4'0" x 10'0" NON-IMPACT REINFORCED SGD

5 TRACK LAYOUT

REINFORCED UNIT W/ 3-1/2" & 4-1/4" SILL RISER

DESIGN PRESSURE RATING	IMPACT RATING
±100.0PSF	NONE

FOR MASONRY/CONCRETE & METAL INSTALLATION
FOR ADDITIONAL SIZES, RISERS AND RATINGS,
SEE SHEET 10

REINFORCED UNIT W/ 3", 3-1/2" & 4-1/4" SILL RISERS

DESIGN PRESSURE RATING	IMPACT RATING
±72.0PSF	NONE

FOR WOOD INSTALLATION
FOR ADDITIONAL SIZES, RISERS AND RATINGS,
SEE SHEET 10

PANEL HEIGHT AND D.L.O. FORMULA
PANEL HEIGHT = UNIT HEIGHT – 1 9/16"
MAXIMUM D.L.O. HEIGHT = PANEL HEIGHT – 9 1/2"
D.L.O. WIDTH = NOMINAL PANEL WIDTH – 9 1/2"

PRODUCT REVISED
as complying with the Florida Building Code
NOA-No. 20-0814.04
Expiration Date 06/23/2026
By Ishaq I. Chanda
Miami-Dade Product Control

Revision: NO CHANGES THIS SHEET.

WINDOOR® INCORPORATED
WINDOOR INCORPORATED
104 TRIPLE DIAMOND BLVD.
NORTH VENICE, FL 34275
(833) 554-5432

PREPARED BY A. LYNN MILLER
1070 TECHNOLOGY DRIVE
N. VENICE, FL 34275
(941) 480-1600
REGISTRATION #29296

Series	Desc.	Sheet	DWG No.	Drawn By	Date	Rev.
SGD8100A	ELEV. & DP @ MAX SIZE - 4'x10' 5T	6 OF 35	8100-NI-NOA	ERIN KOSS	08/07/20	

Title: ALUMINUM SLIDING GLASS DOOR (NON-IMPACT)

ANTHONY LYNN MILLER LICENSE No. 58705 STATE OF FLORIDA PROFESSIONAL ENGINEER
8/7/20

A. LYNN MILLER, P.E.
P.E.# 58705

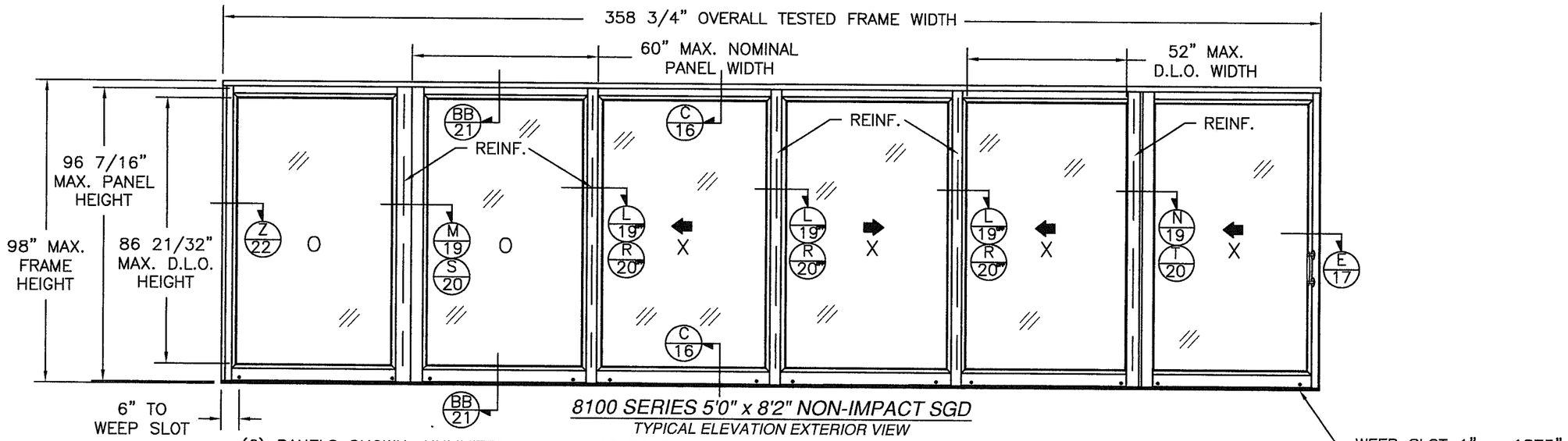

8100 SERIES 5'0" x 8'2" NON-IMPACT SGD

TYPICAL ELEVATION EXTERIOR VIEW

(6) PANELS SHOWN. UNLIMITED NUMBER OF PANELS IN UNLIMITED CONFIGURATIONS IS APPLICABLE AS LONG AS INDIVIDUAL PANEL SIZE DOES NOT EXCEED MAXIMUM PANEL SIZE AND USE VERTICAL CONDITIONS AS SHOWN. MAXIMUM AREA OF ALTERNATE SIZES MUST NOT EXCEED FRAME AREA OF 360 SQ.FT.

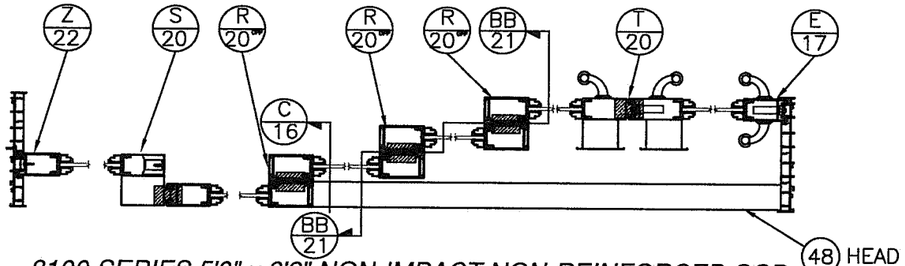

8100 SERIES 5'0" x 8'2" NON-IMPACT NON-REINFORCED SGD

4 TRACK LAYOUT

NON-REINFORCED UNIT W/ 2-1/2", 3", 3-1/2" & 4-1/4" SILL RISERS

DESIGN PRESSURE RATING	IMPACT RATING
±50.0PSF	NONE

FOR WOOD, MASONRY/CONCRETE & METAL INSTALLATION
FOR ADDITIONAL SIZES, RISERS AND RATINGS,
SEE SHEET 9

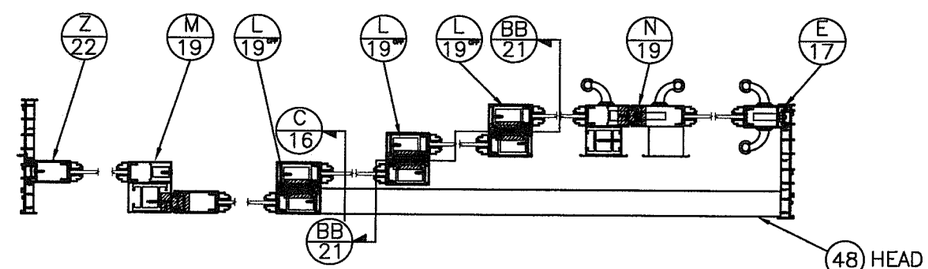

8100 SERIES 5'0" x 8'2" NON-IMPACT REINFORCED SGD

4 TRACK LAYOUT

REINFORCED UNIT W/ 3-1/2 & 4-1/4" SILL RISER

DESIGN PRESSURE RATING	IMPACT RATING
±100.0PSF	NONE

FOR MASONRY/CONCRETE & METAL INSTALLATION
FOR ADDITIONAL SIZES, RISERS AND RATINGS,
SEE SHEET 10

REINFORCED UNIT W/ 3-1/2" & 4-1/4" SILL RISERS

DESIGN PRESSURE RATING	IMPACT RATING
±81.3PSF	NONE

FOR WOOD INSTALLATION
FOR ADDITIONAL SIZES, RISERS AND RATINGS,
SEE SHEET 10

PANEL HEIGHT AND D.L.O. FORMULA
PANEL HEIGHT = UNIT HEIGHT – 1 9/16"
MAXIMUM D.L.O. HEIGHT = PANEL HEIGHT – 9 1/2"
D.L.O. WIDTH = NOMINAL PANEL WIDTH – 9 1/2"

PRODUCT REVISED
as complying with the Florida Building Code
NOA-No. 20-0814.04
Expiration Date 06/23/2026
By Ishwar I. Chanda
Miami-Dade Product Control

Revision: NO CHANGES THIS SHEET.

PREPARED BY A. LYNN MILLER
1070 TECHNOLOGY DRIVE
N. VENICE, FL 34275
(941) 480-1600
REGISTRATION #29296

Rev.	Date	Drawn By	DWG No.	Sheet
	08/07/20	ERIN KOSS	8100-NI-NOA	7 OF 35

Title: ALUMINUM SLIDING GLASS DOOR (NON-IMPACT)
Desc.: ELEV. & DP @ MAX SIZE - 5'x8'2" 4T
Series: SGD8100A

WINDOOR® INCORPORATED
WINDOOR INCORPORATED
104 TRIPLE DIAMOND BLVD.
NORTH VENICE, FL 34275
(833) 554-5432

ANTHONY LYNN MILLER
LICENSE
No. 58705
STATE OF FLORIDA
PROFESSIONAL ENGINEER
8/7/20

A. LYNN MILLER, P.E.
P.E.# 58705

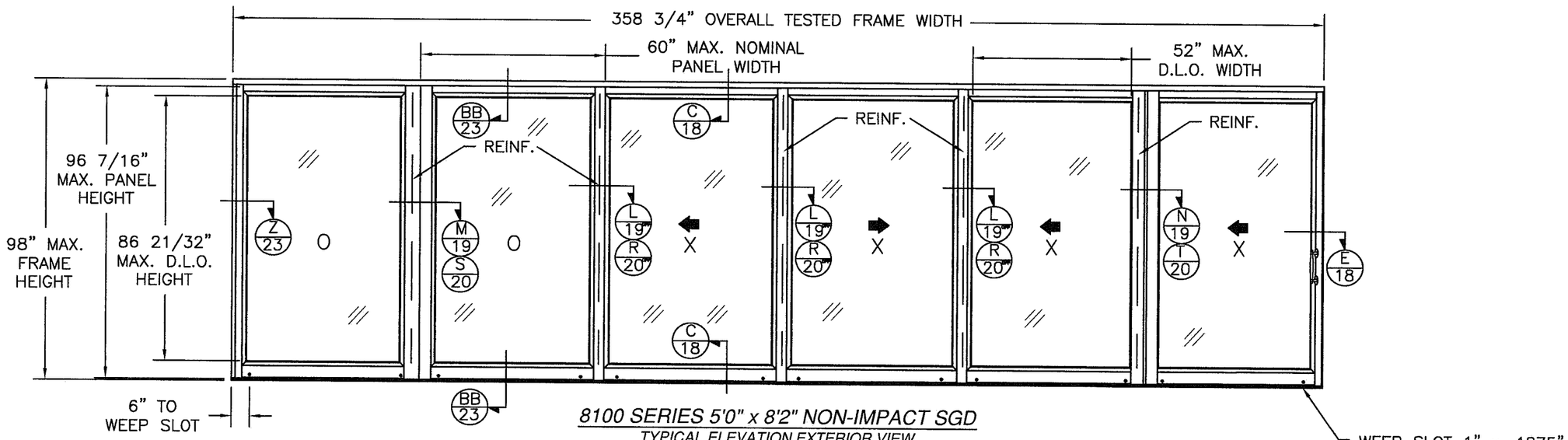

8100 SERIES 5'0" x 8'2" NON-IMPACT SGD

TYPICAL ELEVATION EXTERIOR VIEW

(6) PANELS SHOWN. UNLIMITED NUMBER OF PANELS IN UNLIMITED CONFIGURATIONS IS APPLICABLE AS LONG AS INDIVIDUAL PANEL SIZE DOES NOT EXCEED MAXIMUM PANEL SIZE AND USE VERTICAL CONDITIONS AS SHOWN. MAXIMUM AREA OF ALTERNATE SIZES MUST NOT EXCEED FRAME AREA OF 360 SQ.FT.

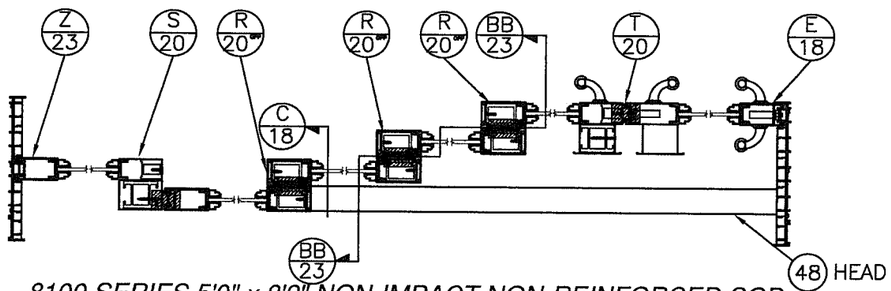

8100 SERIES 5'0" x 8'2" NON-IMPACT NON-REINFORCED SGD

5 TRACK LAYOUT

NON-REINFORCED UNIT W/ 2-1/2", 3", 3-1/2" & 4-1/4" SILL RISERS

DESIGN PRESSURE RATING	IMPACT RATING
±50.0PSF	NONE

FOR WOOD, MASONRY/CONCRETE & METAL INSTALLATION
FOR ADDITIONAL SIZES, RISERS AND RATINGS,
SEE SHEET 9

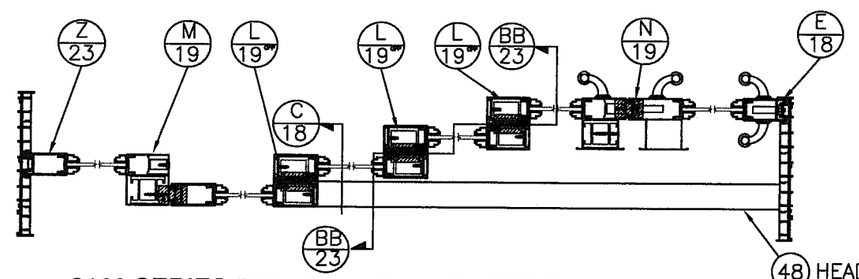

8100 SERIES 5'0" x 8'2" NON-IMPACT REINFORCED SGD

5 TRACK LAYOUT

REINFORCED UNIT W/ 3-1/2" & 4-1/4" SILL RISER

DESIGN PRESSURE RATING	IMPACT RATING
±100.0PSF	NONE

FOR MASONRY/CONCRETE & METAL INSTALLATION
FOR ADDITIONAL SIZES, RISERS AND RATINGS,
SEE SHEET 10

REINFORCED UNIT W/ 3-1/2" & 4-1/4" SILL RISERS

DESIGN PRESSURE RATING	IMPACT RATING
±81.3PSF	NONE

FOR WOOD INSTALLATION
FOR ADDITIONAL SIZES, RISERS AND RATINGS,
SEE SHEET 10

PANEL HEIGHT AND D.L.O. FORMULA
PANEL HEIGHT = UNIT HEIGHT – 1 9/16"
MAXIMUM D.L.O. HEIGHT = PANEL HEIGHT – 9 1/2"
D.L.O. WIDTH = NOMINAL PANEL WIDTH – 9 1/2"

PRODUCT REVISED
as complying with the Florida Building Code
NOA-No. 20-0814.04
Expiration Date 06/23/2026
By Ishaq I. Chanda
Miami-Dade Product Control

Revision: NO CHANGES THIS SHEET.

PREPARED BY A. LYNN MILLER
1070 TECHNOLOGY DRIVE
N. VENICE, FL 34275
(941) 480-1600
REGISTRATION #29296

WINDOOR® INCORPORATED
WINDOOR INCORPORATED
104 TRIPLE DIAMOND BLVD.
NORTH VENICE, FL 34275
(833) 554-5432

Rev.	Date	Drawn By	DWG No.	Sheet
	08/07/20	ERIN KOSS	8100-NI-NOA	8 OF 35

Series: SGD8100A
Desc.: ELEV. & DP @ MAX SIZE - 5'x8'2" 5T
Title: ALUMINUM SLIDING GLASS DOOR (NON-IMPACT)

ANTHONY LYNN MILLER
LICENSE
No. 58705
STATE OF FLORIDA
PROFESSIONAL ENGINEER
8/7/20

A. LYNN MILLER, P.E.
P.E.# 58705

NON-REINFORCED

FOR WOOD, MASONRY/CONCRETE OR METAL INSTALLATION

1-3/4" SILL RISER

Maximum Design Pressure Capacity Chart (psf)														
Frame Height (in)	Panel Width (in)													
	24.0		30.0		36.0		42.0		48.0		54.0		60.0	
	Pos	Neg	Pos	Neg	Pos	Neg	Pos	Neg	Pos	Neg	Pos	Neg	Pos	Neg
80.0	45.0	75.0	45.0	75.0	45.0	75.0	45.0	75.0	45.0	75.0	45.0	64.2	45.0	61.2
84.0	45.0	75.0	45.0	75.0	45.0	75.0	45.0	75.0	45.0	72.0	45.0	59.6	45.0	56.7
96.0	45.0	75.0	45.0	75.0	45.0	73.8	45.0	65.8	45.0	60.0	45.0	49.3	45.0	46.4
98.0	45.0	75.0	45.0	75.0	45.0	72.0	45.0	64.1	45.0	58.4	45.0	47.9	45.0	45.0
108.0	45.0	75.0	45.0	74.3	45.0	64.0	45.0	56.7	45.0	51.4	44.0	44.0	-	-
114.0	45.0	75.0	45.0	69.8	45.0	60.0	45.0	53.1	45.0	48.0	-	-	-	-
120.0	45.0	75.0	45.0	65.8	45.0	56.5	45.0	49.9	45.0	45.0	-	-	-	-

2-1/4", 3", 3-1/2" & 4-1/4" SILL RISERS

Maximum Design Pressure Capacity Chart (psf)														
Frame Height (in)	Panel Width (in)													
	24.0		30.0		36.0		42.0		48.0		54.0		60.0	
	Pos	Neg	Pos	Neg	Pos	Neg	Pos	Neg	Pos	Neg	Pos	Neg	Pos	Neg
80.0	60.0	75.0	60.0	75.0	60.0	75.0	60.0	75.0	60.0	75.0	60.0	71.3	60.0	68.0
84.0	60.0	75.0	60.0	75.0	60.0	75.0	60.0	75.0	60.0	75.0	60.0	66.3	60.0	63.0
96.0	60.0	75.0	60.0	75.0	60.0	75.0	60.0	73.1	60.0	66.7	54.8	54.8	51.5	51.5
98.0	60.0	75.0	60.0	75.0	60.0	75.0	60.0	71.2	60.0	64.9	53.2	53.2	50.0	50.0
108.0	60.0	75.0	60.0	75.0	60.0	71.1	60.0	63.1	57.1	57.1	49.0	49.0	-	-
114.0	60.0	75.0	60.0	75.0	60.0	66.7	59.0	59.0	53.3	53.3	-	-	-	-
120.0	60.0	75.0	60.0	73.1	60.0	62.7	55.4	55.4	50.0	50.0	-	-	-	-

PANEL HEIGHT AND D.L.O. FORMULA
PANEL HEIGHT = UNIT HEIGHT – 1 9/16"
MAXIMUM D.L.O. HEIGHT = PANEL HEIGHT – 9 1/2"
D.L.O. WIDTH = NOMINAL PANEL WIDTH – 9 1/2"

APPROVED SILL RISERS

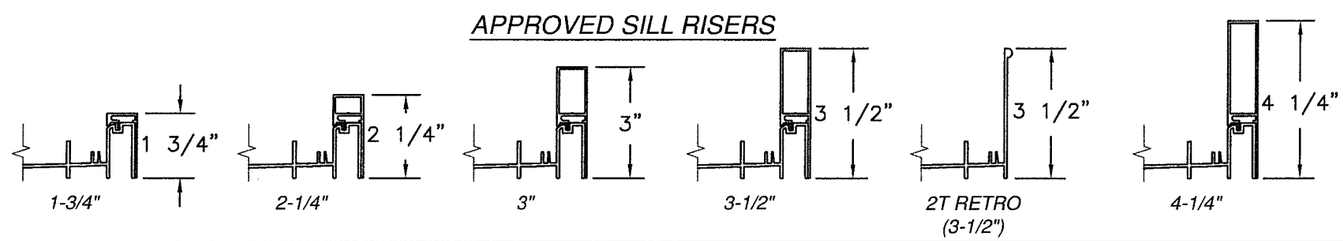

PRODUCT REVISED
as complying with the Florida Building Code
NOA-No. 20-0814.04
Expiration Date 06/23/2026
By Ishaq I. Chanda
Miami-Dade Product Control

Revision: ADDED 3–1/2" & 4–1/4" RISERS.

PREPARED BY A. LYNN MILLER
1070 TECHNOLOGY DRIVE
N. VENICE, FL 34275
(941) 480-1600
REGISTRATION #29296

WINDOOR® INCORPORATED
WINDOOR INCORPORATED
104 TRIPLE DIAMOND BLVD.
NORTH VENICE, FL 34275
(833) 554-5432

Series	Desc.	Title	Sheet	DWG No.	Drawn By	Date	Rev.
SGD8100A	DP CHARTS - NON-REINFORCED	ALUMINUM SLIDING GLASS DOOR (NON-IMPACT)	9 OF 35	8100-NI-NOA	ERIN KOSS	08/07/20	

ANTHONY LYNN MILLER
LICENSE
No. 58705
STATE OF FLORIDA
PROFESSIONAL ENGINEER
8/7/20

A. LYNN MILLER, P.E.
P.E.# 58705

REINFORCED

FOR MASONRY/CONCRETE OR METAL INSTALLATION

3" SILL RISER

Maximum Design Pressure Capacity Chart (psf)														
Frame Height (in)	Panel Width (in)													
	24.0		30.0		36.0		42.0		48.0		54.0		60.0	
	Pos	Neg	Pos	Neg	Pos	Neg	Pos	Neg	Pos	Neg	Pos	Neg	Pos	Neg
80.0	80.0	150.0	80.0	150.0	80.0	150.0	80.0	148.8	80.0	137.1	80.0	114.0	80.0	108.8
84.0	80.0	150.0	80.0	150.0	80.0	150.0	80.0	139.3	80.0	128.0	80.0	106.0	80.0	100.7
96.0	80.0	150.0	80.0	150.0	80.0	131.3	80.0	117.0	80.0	106.7	80.0	87.6	80.0	82.4
98.0	80.0	150.0	80.0	148.0	80.0	128.0	80.0	114.0	80.0	103.8	80.0	85.1	80.0	80.0
108.0	80.0	150.0	80.0	132.1	80.0	113.8	80.0	100.9	80.0	91.4	79.0	79.0	-	-
114.0	80.0	150.0	80.0	124.1	80.0	106.7	80.0	94.4	80.0	85.3	-	-	-	-
120.0	80.0	142.2	80.0	117.0	80.0	100.4	80.0	88.7	80.0	80.0	-	-	-	-

3-1/2" SILL RISER

Maximum Design Pressure Capacity Chart (psf)														
Frame Height (in)	Panel Width (in)													
	24.0		30.0		36.0		42.0		48.0		54.0		60.0	
	Pos	Neg	Pos	Neg	Pos	Neg	Pos	Neg	Pos	Neg	Pos	Neg	Pos	Neg
80.0	100.0	150.0	100.0	150.0	100.0	150.0	100.0	150.0	100.0	150.0	100.0	142.6	100.0	136.0
84.0	100.0	150.0	100.0	150.0	100.0	150.0	100.0	150.0	100.0	150.0	100.0	132.6	100.0	125.9
96.0	100.0	150.0	100.0	150.0	100.0	150.0	100.0	146.3	100.0	133.3	100.0	109.5	100.0	103.0
98.0	100.0	150.0	100.0	150.0	100.0	150.0	100.0	142.5	100.0	129.7	100.0	106.4	100.0	100.0
108.0	100.0	150.0	100.0	150.0	100.0	142.2	100.0	126.1	100.0	114.3	99.0	99.0	-	-
114.0	100.0	150.0	100.0	150.0	100.0	133.3	100.0	118.0	100.0	106.7	-	-	-	-
120.0	100.0	150.0	100.0	146.3	100.0	125.5	100.0	110.8	100.0	100.0	-	-	-	-

4-1/4" SILL RISER

Maximum Design Pressure Capacity Chart (psf)														
Frame Height (in)	Panel Width (in)													
	24.0		30.0		36.0		42.0		48.0		54.0		60.0	
	Pos	Neg	Pos	Neg	Pos	Neg	Pos	Neg	Pos	Neg	Pos	Neg	Pos	Neg
80.0	125.3	150.0	125.3	150.0	125.3	150.0	125.3	150.0	125.3	150.0	125.3	142.6	125.3	136.0
84.0	125.3	150.0	125.3	150.0	125.3	150.0	125.3	150.0	125.3	150.0	125.3	132.6	125.3	125.9
96.0	125.3	150.0	125.3	150.0	125.3	150.0	125.3	146.3	125.3	133.3	109.5	109.5	103.0	103.0
98.0	125.3	150.0	125.3	150.0	125.3	150.0	125.3	142.5	125.3	129.7	106.4	106.4	100.0	100.0
108.0	125.3	150.0	125.3	150.0	125.3	142.2	125.3	126.1	114.3	114.3	99.0	99.0	-	-
114.0	125.3	150.0	125.3	150.0	125.3	133.3	118.0	118.0	106.7	106.7	-	-	-	-
120.0	125.3	150.0	125.3	146.3	125.3	125.5	110.8	110.8	100.0	100.0	-	-	-	-

FOR WOOD INSTALLATION

3" SILL RISER

Maximum Design Pressure Capacity Chart (psf)														
Frame Height (in)	Panel Width (in)													
	24.0		30.0		36.0		42.0		48.0		54.0		60.0	
	Pos	Neg	Pos	Neg	Pos	Neg	Pos	Neg	Pos	Neg	Pos	Neg	Pos	Neg
80.0	80.0	135.5	80.0	113.4	80.0	148.6	80.0	125.4	80.0	123.4	80.0	113.8	80.0	92.2
84.0	80.0	128.0	80.0	106.9	80.0	139.6	80.0	125.4	80.0	115.2	80.0	106.0	80.0	92.2
96.0	80.0	109.7	80.0	91.0	80.0	118.2	80.0	105.3	80.0	96.0	80.0	87.6	80.0	82.4
98.0	80.0	107.2	80.0	88.8	80.0	115.2	80.0	102.6	80.0	93.4	80.0	85.1	80.0	80.0
108.0	80.0	96.0	79.3	79.3	80.0	102.4	80.0	90.8	80.0	82.3	71.0	71.0	-	-
114.0	80.0	90.4	74.5	74.5	80.0	96.0	80.0	84.9	76.8	76.8	-	-	-	-
120.0	80.0	85.3	70.2	70.2	80.0	90.4	79.8	79.8	72.0	72.0	-	-	-	-

3-1/2" SILL RISER

Maximum Design Pressure Capacity Chart (psf)														
Frame Height (in)	Panel Width (in)													
	24.0		30.0		36.0		42.0		48.0		54.0		60.0	
	Pos	Neg	Pos	Neg	Pos	Neg	Pos	Neg	Pos	Neg	Pos	Neg	Pos	Neg
80.0	100.0	135.5	100.0	113.4	100.0	148.6	100.0	125.4	100.0	123.4	100.0	113.8	92.2	92.2
84.0	100.0	128.0	100.0	106.9	100.0	139.6	100.0	125.4	100.0	115.2	100.0	107.8	92.2	92.2
96.0	100.0	109.7	91.0	91.0	100.0	118.2	100.0	105.3	96.0	96.0	89.0	89.0	83.8	83.8
98.0	100.0	107.2	88.8	88.8	100.0	115.2	100.0	102.6	93.4	93.4	86.5	86.5	81.3	81.3
108.0	96.0	96.0	79.3	79.3	100.0	102.4	90.8	90.8	82.3	82.3	71.0	71.0	-	-
114.0	90.4	90.4	74.5	74.5	96.0	96.0	84.9	84.9	76.8	76.8	-	-	-	-
120.0	85.3	85.3	70.2	70.2	90.4	90.4	79.8	79.8	72.0	72.0	-	-	-	-

4-1/4" SILL RISER

Maximum Design Pressure Capacity Chart (psf)														
Frame Height (in)	Panel Width (in)													
	24.0		30.0		36.0		42.0		48.0		54.0		60.0	
	Pos	Neg	Pos	Neg	Pos	Neg	Pos	Neg	Pos	Neg	Pos	Neg	Pos	Neg
80.0	125.3	135.5	113.4	113.4	125.3	148.6	125.3	125.4	125.3	123.4	113.8	113.8	92.2	92.2
84.0	125.3	128.0	106.9	106.9	125.3	139.6	125.3	125.4	115.2	115.2	107.8	107.8	92.2	92.2
96.0	109.7	109.7	91.0	91.0	118.2	118.2	105.3	105.3	96.0	96.0	89.0	89.0	83.8	83.8
98.0	107.2	107.2	88.8	88.8	115.2	115.2	102.6	102.6	93.4	93.4	86.5	86.5	81.3	81.3
108.0	96.0	96.0	79.3	79.3	102.4	102.4	90.8	90.8	82.3	82.3	71.0	71.0	-	-
114.0	90.4	90.4	74.5	74.5	96.0	96.0	84.9	84.9	76.8	76.8	-	-	-	-
120.0	85.3	85.3	70.2	70.2	90.4	90.4	79.8	79.8	72.0	72.0	-	-	-	-

APPROVED SILL RISERS

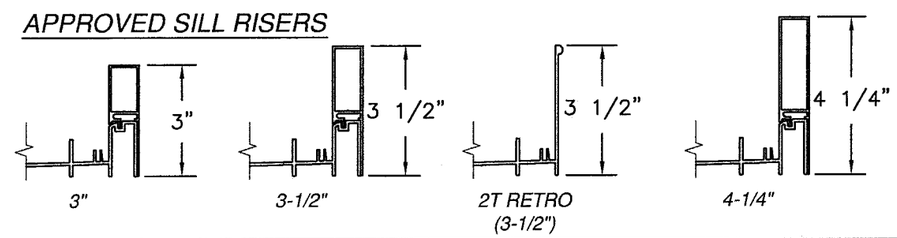

PANEL HEIGHT AND D.L.O. FORMULA
PANEL HEIGHT = UNIT HEIGHT – 1 9/16"
MAXIMUM D.L.O. HEIGHT = PANEL HEIGHT – 9 1/2"
D.L.O. WIDTH = NOMINAL PANEL WIDTH – 9 1/2"

PRODUCT REVISED
as complying with the Florida Building Code
NOA-No. 20-0814.04
Expiration Date 06/23/2026
By Ishaq I. Chanda
Miami-Dade Product Control

Revision: NO CHANGES THIS SHEET.

PREPARED BY A. LYNN MILLER
1070 TECHNOLOGY DRIVE
N. VENICE, FL 34275
(941) 480-1600
REGISTRATION #29296

Rev.	Date	Drawn By	DWG No.	Sheet	Series
	08/07/20	ERIN KOSS	8100-NI-NOA	10 OF 35	SGD8100A

Title: ALUMINUM SLIDING GLASS DOOR (NON-IMPACT)
Desc.: DP CHARTS - REINFORCED

WINDOOR® INCORPORATED
WINDOOR INCORPORATED
104 TRIPLE DIAMOND BLVD.
NORTH VENICE, FL 34275
(833) 554-5432

ANTHONY LYNN MILLER
LICENSE
No. 58705
STATE OF FLORIDA
PROFESSIONAL ENGINEER
8/7/20

A. LYNN MILLER, P.E.
P.E.# 58705

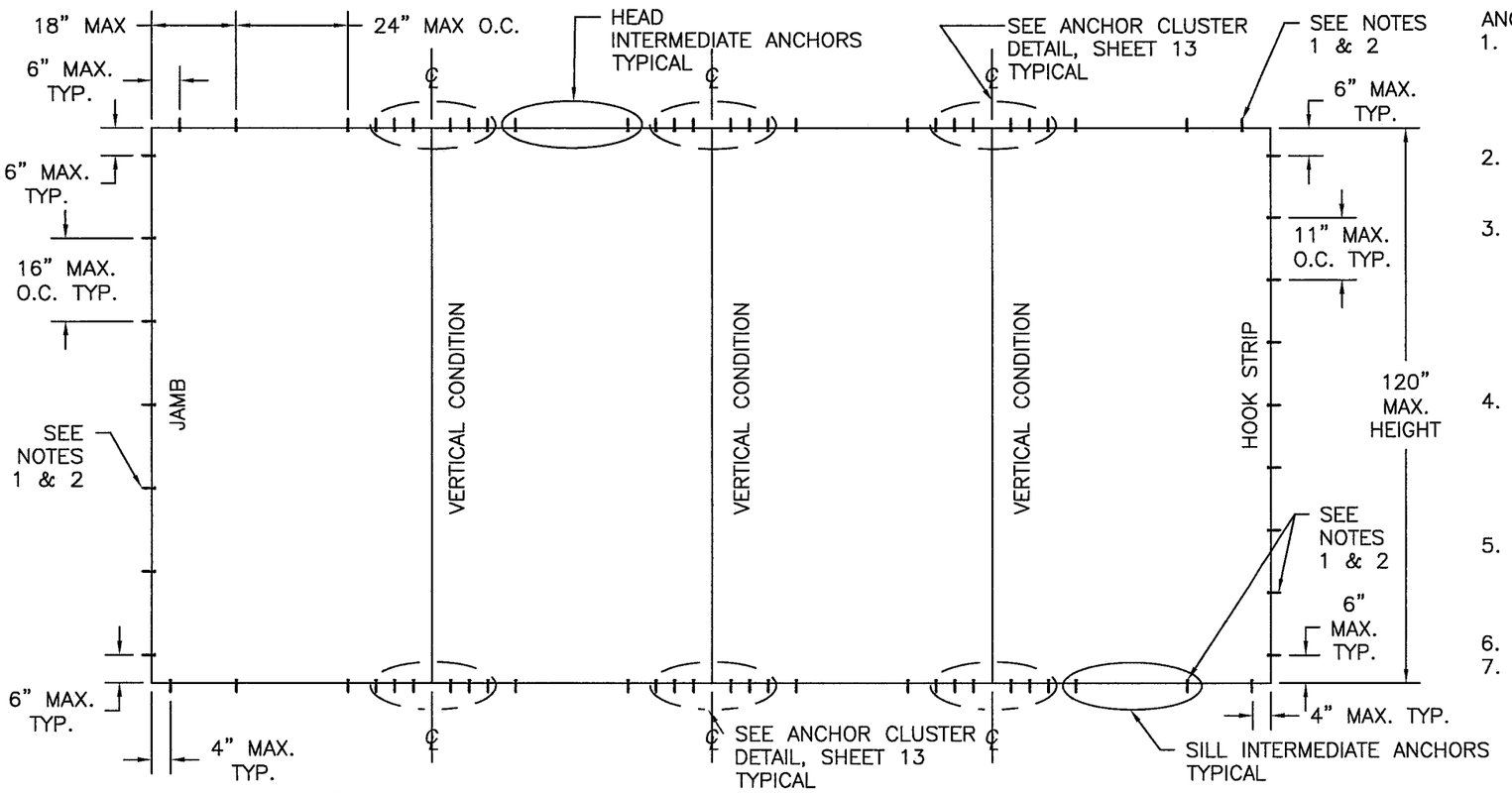

4'0" x 10'0" ANCHORING LAYOUT NON–REINFORCED AND REINFORCED UNITS

4PANEL UNIT SHOWN, APPLICABLE TO ALL CONFIGURATIONS USING SAME ANCHOR CLUSTER AND PATTERN

Number of Anchor Locations Required (Pairs for 2T, 3T & 4T; 3 per Location for 5T)																					
Frame Height (in)	Panel Width (in)																				
	24.0			30.0			36.0			42.0			48.0			54.0			60.0		
	Jamb	H&S	Cluster	Jamb	H&S	Cluster	Jamb	H&S	Cluster	Jamb	H&S	Cluster	Jamb	H&S	Cluster	Jamb	H&S	Cluster	Jamb	H&S	Cluster
80.0	6	1	4	6	1	4	6	2	6	6	2	6	6	3	6	6	3	6	6	3	6
84.0	6	1	4	6	1	4	6	2	6	6	2	6	6	3	6	6	3	6	6	3	6
96.0	7	1	4	7	1	4	7	2	6	7	2	6	7	3	6	7	3	6	7	3	6
98.0	7	1	4	7	1	4	7	2	6	7	2	6	7	3	6	7	3	6	7	3	6
108.0	7	1	4	7	1	4	7	2	6	7	2	6	7	3	6	7	3	6	-	-	-
114.0	8	1	4	8	1	4	8	2	6	8	2	6	8	3	6	-	-	-	-	-	-
120.0	8	1	4	8	1	4	8	2	6	8	2	6	8	3	6	-	-	-	-	-	-

Number of Anchor Locations Required (Single)							
Frame Height (in)	Panel Width (in)						
	24.0	30.0	36.0	42.0	48.0	54.0	60.0
	Hook	Hook	Hook	Hook	Hook	Hook	Hook
80.0	8	8	8	8	8	8	8
84.0	8	8	8	8	8	8	8
96.0	9	9	9	9	9	9	9
98.0	9	9	9	9	9	9	9
108.0	10	10	10	10	10	10	-
114.0	11	11	11	11	11	-	-
120.0	11	11	11	11	11	-	-

ANCHORING NOTES:

1. FRAME SYSTEMS, 2 TRACK, 3 TRACK, 4 TRACK, HAVE TWO ANCHORS AT EACH LOCATION SHOWN IN HEAD, SILL AND JAMBS, 5 TRACK FRAME SYSTEMS HAVE THREE ANCHORS AT EACH LOCATION SHOWN IN HEAD, SILL AND JAMBS.
2. ALL FRAME SYSTEMS, 2 TRACK, 3 TRACK 4 TRACK AND 5 TRACK, HAVE ONE ANCHOR AT EACH LOCATION IN HOOK STRIP.
3. FOR ANCHORING INTO MASONRY/CONCRETE USE 1/4" ELCO CRETE–FLEX SS4 WITH SUFFICIENT LENGTH TO ACHIEVE A 1 1/4" MINIMUM EMBEDMENT INTO SUBSTRATE WITH 2 1/2" MINIMUM EDGE DISTANCE AND 2 3/8" MINIMUM SEPARATION. LOCATE ANCHORS AS SHOWN IN ELEVATIONS AND INSTALLATION DETAILS.
4. FOR ANCHORING INTO WOOD FRAMING, 2X BUCK OR 2X WOOD BACKED 20 GA. MINIMUM STEEL STUD USE GRADE 5 #14 WOOD SCREW WITH SUFFICIENT LENGTH TO ACHIEVE A 1 5/8" MINIMUM EMBEDMENT INTO SUBSTRATE. LOCATE ANCHORS AS SHOWN IN ELEVATIONS AND INSTALLATION DETAILS.
5. SHIM AS REQUIRED AT EACH INSTALLATION ANCHOR WITH LOAD BEARING SHIM. SHIM WHERE SPACE OF 1/16" OR GREATER OCCURS. MAXIMUM ALLOWABLE LOAD BEARING SHIM TO BE 1/4".
6. ALL FASTENERS TO BE CORROSION RESISTANT.
7. INSTALLATION ANCHORS SHALL BE INSTALLED IN ACCORDANCE WITH ANCHOR MANUFACTURER'S INSTALLATION INSTRUCTIONS, AND ANCHORS SHALL NOT BE USED IN SUBSTRATES WITH STRENGTHS LESS THAN THE MINIMUM STRENGTH SPECIFIED BELOW:
   A. WOOD – MINIMUM SPECIFIC GRAVITY OF G=0.42
   B. CONCRETE – MINIMUM COMPRESSIVE STRENGTH OF 3,350 PSI.
   C. MASONRY – STRENGTH CONFORMANCE TO ASTM C–90, GRADE N, TYPE 1 (OR GREATER).
   D. METAL FRAMING – 20 GA (.040) MINIMUM THICKNESS WITH 2X WOOD BACKING, Fy=33KSI/Fu=52KSI MINIMUM.

H&S = HEAD AND SILL INTERMEDIATE ANCHORS

PRODUCT REVISED
as complying with the Florida Building Code
NOA-No. 20-0814.04
Expiration Date 06/23/2026
By Ishaq I. Chanda
Miami-Dade Product Control

Revision: NO CHANGES THIS SHEET.

PREPARED BY A. LYNN MILLER
1070 TECHNOLOGY DRIVE
N. VENICE, FL 34275
(941) 480-1600
REGISTRATION #29296

WINDOOR® INCORPORATED
WINDOOR INCORPORATED
104 TRIPLE DIAMOND BLVD.
NORTH VENICE, FL 34275
(833) 554-5432

Series	Desc.	Title	Sheet	DWG No.	Drawn By	Date	Rev.
SGD8100A	ANCHOR LAYOUT - 4'x10'	ALUMINUM SLIDING GLASS DOOR (NON-IMPACT)	11 OF 35	8100-NI-NOA	ERIN KOSS	08/07/20	

ANTHONY LYNN MILLER
LICENSE
No. 58705
STATE OF FLORIDA
PROFESSIONAL ENGINEER
8/7/20

A. LYNN MILLER, P.E.
P.E.# 58705

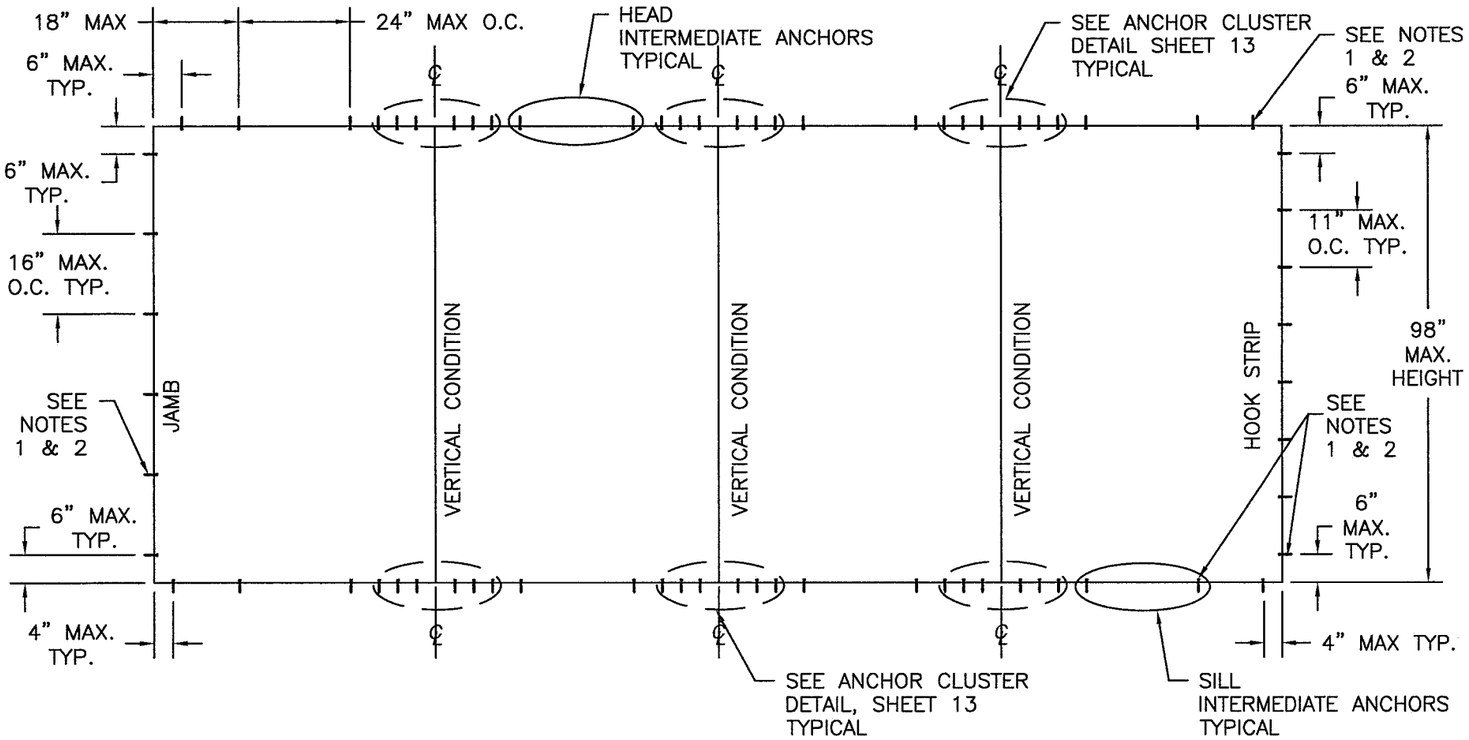

5'0" x 8'2" ANCHORING LAYOUT NON–REINFORCED AND REINFORCED UNITS

4PANEL UNIT SHOWN, APPLICABLE TO ALL CONFIGURATIONS USING SAME ANCHOR CLUSTER AND PATTERN

Number of Anchor Locations Required (Pairs for 2T, 3T & 4T; 3 per Location for 5T)																					
Frame Height (in)	Panel Width (in)																				
	24.0			30.0			36.0			42.0			48.0			54.0			60.0		
	Jamb	H&S	Cluster	Jamb	H&S	Cluster	Jamb	H&S	Cluster	Jamb	H&S	Cluster	Jamb	H&S	Cluster	Jamb	H&S	Cluster	Jamb	H&S	Cluster
80.0	6	1	4	6	1	4	6	2	6	6	2	6	6	3	6	6	3	6	6	3	6
84.0	6	1	4	6	1	4	6	2	6	6	2	6	6	3	6	6	3	6	6	3	6
96.0	7	1	4	7	1	4	7	2	6	7	2	6	7	3	6	7	3	6	7	3	6
98.0	7	1	4	7	1	4	7	2	6	7	2	6	7	3	6	7	3	6	7	3	6
108.0	7	1	4	7	1	4	7	2	6	7	2	6	7	3	6	7	3	6	-	-	-
114.0	8	1	4	8	1	4	8	2	6	8	2	6	8	3	6	-	-	-	-	-	-
120.0	8	1	4	8	1	4	8	2	6	8	2	6	8	3	6	-	-	-	-	-	-

Number of Anchor Locations Required (Single)							
Frame Height (in)	Panel Width (in)						
	24.0	30.0	36.0	42.0	48.0	54.0	60.0
	Hook	Hook	Hook	Hook	Hook	Hook	Hook
80.0	8	8	8	8	8	8	8
84.0	8	8	8	8	8	8	8
96.0	9	9	9	9	9	9	9
98.0	9	9	9	9	9	9	9
108.0	10	10	10	10	10	10	-
114.0	11	11	11	11	11	-	-
120.0	11	11	11	11	11	-	-

ANCHORING NOTES:

1. FRAME SYSTEMS, 2 TRACK, 3 TRACK, 4 TRACK, HAVE TWO ANCHORS AT EACH LOCATION SHOWN IN HEAD, SILL AND JAMBS, 5 TRACK FRAME SYSTEMS HAVE THREE ANCHORS AT EACH LOCATION SHOWN IN HEAD, SILL AND JAMBS.
2. ALL FRAME SYSTEMS, 2 TRACK, 3 TRACK 4 TRACK AND 5 TRACK, HAVE ONE ANCHOR AT EACH LOCATION IN HOOK STRIP.
3. FOR ANCHORING INTO MASONRY/CONCRETE USE 1/4" ELCO CRETE–FLEX SS4 WITH SUFFICIENT LENGTH TO ACHIEVE A 1 1/4" MINIMUM EMBEDMENT INTO SUBSTRATE WITH 2 1/2" MINIMUM EDGE DISTANCE AND 2 3/8" MINIMUM SEPARATION. LOCATE ANCHORS AS SHOWN IN ELEVATIONS AND INSTALLATION DETAILS.
4. FOR ANCHORING INTO WOOD FRAMING, 2X BUCK OR 2X WOOD BACKED 20 GA. MINIMUM STEEL STUD USE GRADE 5 #14 WOOD SCREW WITH SUFFICIENT LENGTH TO ACHIEVE A 1 5/8" MINIMUM EMBEDMENT INTO SUBSTRATE. LOCATE ANCHORS AS SHOWN IN ELEVATIONS AND INSTALLATION DETAILS.
5. SHIM AS REQUIRED AT EACH INSTALLATION ANCHOR WITH LOAD BEARING SHIM. SHIM WHERE SPACE OF 1/16" OR GREATER OCCURS. MAXIMUM ALLOWABLE LOAD BEARING SHIM TO BE 1/4".
6. ALL FASTENERS TO BE CORROSION RESISTANT.
7. INSTALLATION ANCHORS SHALL BE INSTALLED IN ACCORDANCE WITH ANCHOR MANUFACTURER'S INSTALLATION INSTRUCTIONS, AND ANCHORS SHALL NOT BE USED IN SUBSTRATES WITH STRENGTHS LESS THAN THE MINIMUM STRENGTH SPECIFIED BELOW:
   A. WOOD – MINIMUM SPECIFIC GRAVITY OF G=0.42
   B. CONCRETE – MINIMUM COMPRESSIVE STRENGTH OF 3,350 PSI.
   C. MASONRY – STRENGTH CONFORMANCE TO ASTM C–90, GRADE N, TYPE 1 (OR GREATER).
   D. METAL FRAMING – 20 GA (.040) MINIMUM THICKNESS WITH 2X WOOD BACKING, Fy=33KSI/Fu=52KSI MINIMUM.

H&S = HEAD AND SILL INTERMEDIATE ANCHORS

PRODUCT REVISED
as complying with the Florida Building Code
NOA-No. 20-0814.04
Expiration Date 06/23/2026
By Ishaq I. Chanda
Miami-Dade Product Control

Revision: NO CHANGES THIS SHEET.

PREPARED BY A. LYNN MILLER
1070 TECHNOLOGY DRIVE
N. VENICE, FL 34275
(941) 480-1600
REGISTRATION #29296

WINDOOR® INCORPORATED
WINDOOR INCORPORATED
104 TRIPLE DIAMOND BLVD.
NORTH VENICE, FL 34275
(833) 554-5432

Series	Desc.	Title	Sheet	DWG No.	Drawn By	Date	Rev.
SGD8100A	ANCHOR LAYOUT - 5'x8'2"	ALUMINUM SLIDING GLASS DOOR (NON-IMPACT)	12 OF 35	8100-NI-NOA	ERIN KOSS	08/07/20	

ANTHONY LYNN MILLER LICENSE No. 58705 STATE OF FLORIDA PROFESSIONAL ENGINEER
8/7/20
A. LYNN MILLER, P.E.
P.E.# 58705

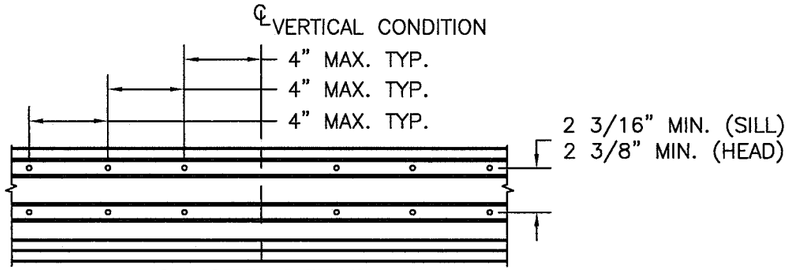

CLUSTER DETAIL
2-TRACK SYSTEM

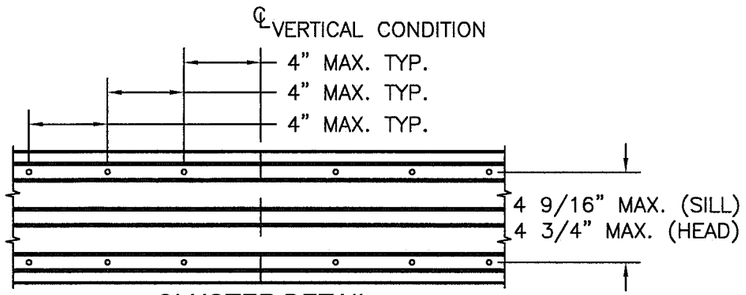

CLUSTER DETAIL
3-TRACK SYSTEM

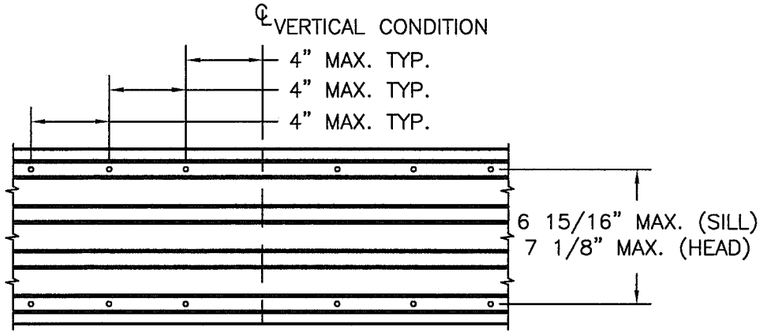

CLUSTER DETAIL
4-TRACK SYSTEM

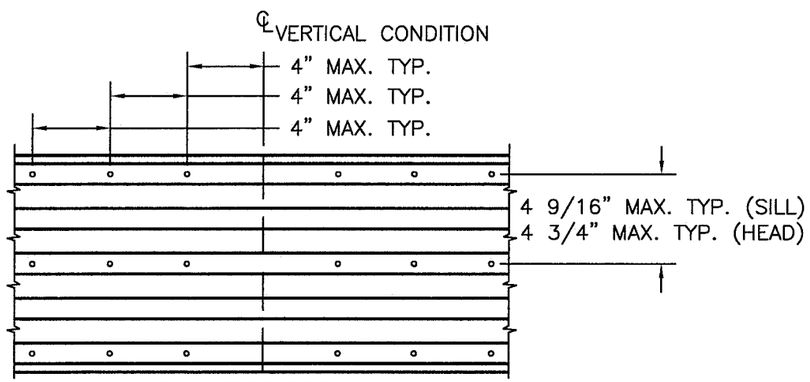

CLUSTER DETAIL
5-TRACK SYSTEM

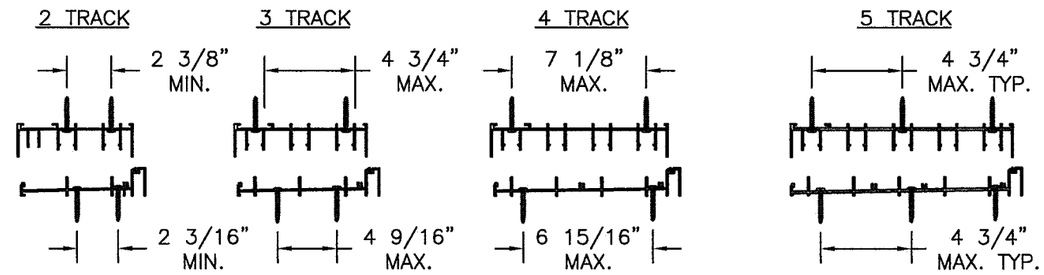

HEAD & SILL ANCHOR LOCATIONS

POCKET

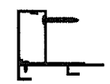

HOOKSTRIP ANCHOR LOCATIONS

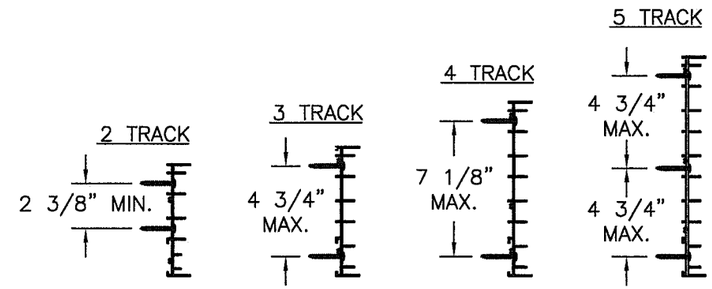

JAMB ANCHOR LOCATIONS

PANEL CONSTRUCTION:
ALL PANELS ARE CONSTRUCTED FROM EXTRUDED 6063–T6 ALUMINUM. VERTICAL STILES ARE NOTCHED TO RECEIVE HORIZONTAL RAILS. EACH RAIL IS SECURED TO STILES WITH (3) #10 x 1 1/4" SQ. DRIVE SCREW AT EACH END, ITEM #47. ALL PANELS HAVE AN INTERIOR AND EXTERIOR APPLIED GLAZING STOP.

FRAME CONSTRUCTION:
EACH FRAME CORNER IS NOTCHED AND BUTTED. HEAD AND SILL ARE SECURED TO JAMBS WITH #7 TYPE A SS SCREW, ITEM #48, (2) AT EACH CORNER ON 2 TRACK, (2) AT 3 TRACK FRAME, (3) AT EACH CORNER ON 4 TRACK FRAME AND (3) AT EACH CORNER ON 5 TRACK FRAME.

PRODUCT REVISED
as complying with the Florida Building Code
NOA-No. 20-0814.04
Expiration Date 06/23/2026
By Ishaq I. Chanda
Miami-Dade Product Control

Revision: NO CHANGES THIS SHEET.

WINDOOR® INCORPORATED
WINDOOR INCORPORATED
104 TRIPLE DIAMOND BLVD.
NORTH VENICE, FL 34275
(833) 554-5432

PREPARED BY A. LYNN MILLER
1070 TECHNOLOGY DRIVE
N. VENICE, FL 34275
(941) 480-1600
REGISTRATION #29296

Series	Desc.	Sheet	DWG No.	Drawn By	Date	Rev.
SGD8100A	ANCHOR LOCATIONS & CLUSTERS	13 OF 35	8100-NI-NOA	ERIN KOSS	08/07/20	

Title: ALUMINUM SLIDING GLASS DOOR (NON-IMPACT)

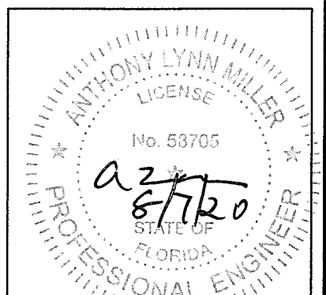

A. LYNN MILLER, P.E.
P.E.# 58705

BILL OF MATERIALS

ITEM NO.	PART NUMBER	DESCRIPTION	MANUFACTURER	MATERIAL
1	FS-04641	2 TRACK WS FRAME HEAD	KEYMARK	ALUMINUM 6063-T6
2	FS-04788	2 TRACK WS FRAME JAMB	KEYMARK	ALUMINUM 6063-T6
3	S-44119	2 TRACK NSWS SILL PAN	KEYMARK	ALUMINUM 6063-T6
4	S-44121	2 TRACK WS SILL INSERT	KEYMARK	ALUMINUM 6063-T6
5	T-32124	5 TRACK FRAME HEAD	KEYMARK	ALUMINUM 6063-T6
6	T-32123	5 TRACK FRAME JAMB	KEYMARK	ALUMINUM 6063-T6
7	FS-02180	3 TRACK FRAME HEAD	KEYMARK	ALUMINUM 6063-T6
8	FS-02181	3 TRACK FRAME JAMB	KEYMARK	ALUMINUM 6063-T6
9	S-44123	3 TRACK SILL PAN	KEYMARK	ALUMINUM 6063-T6
10	S-44117	3 TRACK SILL INSERT	KEYMARK	ALUMINUM 6063-T6
11	FS-02071	4 TRACK FRAME HEAD	KEYMARK	ALUMINUM 6063-T6
12	FS-02070	4 TRACK FRAME JAMB	KEYMARK	ALUMINUM 6063-T6
13	S-44118	4 TRACK SILL PAN	KEYMARK	ALUMINUM 6063-T6
14	S-22124	4 TRACK SILL INSERT	KEYMARK	ALUMINUM 6063-T6
15	FS-01882	FRAME HEAD INSERT	KEYMARK	ALUMINUM 6063-T6
16	FS-01883	FRAME JAMB INSERT	KEYMARK	ALUMINUM 6063-T6
17	FH-01869	TOP RAIL	KEYMARK	ALUMINUM 6063-T6
18	FH-04723	BOTTOM RAIL	KEYMARK	ALUMINUM 6063-T6
19	FS-04766	TALL BOTTOM RAIL	KEYMARK	ALUMINUM 6063-T6
20	NPG	PANEL GUIDE		NYLON
21	FH-01871	LOCK STILE	KEYMARK	ALUMINUM 6063-T6
22	FH-05044	INTERLOCK STILE	KEYMARK	ALUMINUM 6063-T6
23	FH-04767	FEMALE BUTT STILE EXT. OFFSET	KEYMARK	ALUMINUM 6063-T6
24	FH-04750	MALE BUTT STILE EXT. OFFSET	KEYMARK	ALUMINUM 6063-T6
25	FH-04826	FEMALE BUTT STILE INT. OFFSET	KEYMARK	ALUMINUM 6063-T6
26	P7569AM	DUST PAD 1.244" x .5" x 2.34"		
27	FS-04747	BUMPER JAMB INSERT	KEYMARK	ALUMINUM 6063-T6
28	FS-04754	PLAIN STILE INTERLOCK	KEYMARK	ALUMINUM 6063-T6
29	FS-04755	PLAIN STILE INTERLOCK COVER	KEYMARK	ALUMINUM 6063-T6
30	FS-05382	INTERLOCK SNAP COVER	KEYMARK	ALUMINUM 6063-T6
31	FS-02726	STILE JAMB INSERT	KEYMARK	ALUMINUM 6063-T6
32	FS-02726	PANEL STILE JAMB INSERT	KEYMARK	ALUMINUM 6063-T6
33	FH-03693	1 3/ 4" SILL RISER	KEYMARK	ALUMINUM 6063-T6
34	FH-03652	2 1/ 4" SILL RISER	KEYMARK	ALUMINUM 6063-T6
35	FH-03653	3" SILL RISER	KEYMARK	ALUMINUM 6063-T6
36	FH-03654	3 1/2" SILL RISER	KEYMARK	ALUMINUM 6063-T6
37	FH-03655	4 1/ 4" SILL RISER	KEYMARK	ALUMINUM 6063-T6
38	FS-02173	HOOK STRIP	KEYMARK	ALUMINUM 6063-T6
39	FS-04476	HOOK STRIP WALL COVER	KEYMARK	ALUMINUM 6063-T6
40	FS-04477	HOOK STRIP WALL MOUNT	KEYMARK	ALUMINUM 6063-T6
41	FH-01876	1/4" HORIZONTAL GLASS STOP	KEYMARK	ALUMINUM 6063-T6
42	FH-01875	1/4" VERTICAL GLASS STOP	KEYMARK	ALUMINUM 6063-T6
43	FS-01879	1" HORIZONTAL GLASS STOP	KEYMARK	ALUMINUM 6063-T6
44	FS-01880	1" VERTICAL GLASS STOP	KEYMARK	ALUMINUM 6063-T6
45	FH-02642	6000 BUTT STILE REINFORCING BAR	KEYMARK	ALUMINUM 6063-T6
46	FH-05045	INTERLOCK REINFORCING BAR	KEYMARK	ALUMINUM 6063-T6
47	FH-03916	FEMALE BUTT STILE REINFORCING BAR	KEYMARK	ALUMINUM 6063-T6
48	FS-02210	FRAME HEAD COVER	KEYMARK	ALUMINUM 6063-T6
49	FS-02208	SILL COVER	KEYMARK	ALUMINUM 6063-T6
50		SCREEN SPLINE		
51	TP875	1/4" GLAZING VINYL		VINYL
52	TP1051	1" GLAZING VINYL		VINYL
53	#1988-9000	TANDEM ROLLER		
54	2468	DUAL POINT MORTISE LOCK & KEEPE		
55	TP990	GLASS SETTING BLOCK		

BILL OF MATERIALS CONTINUED ON SHEET 15

OPTIONAL SCREENS

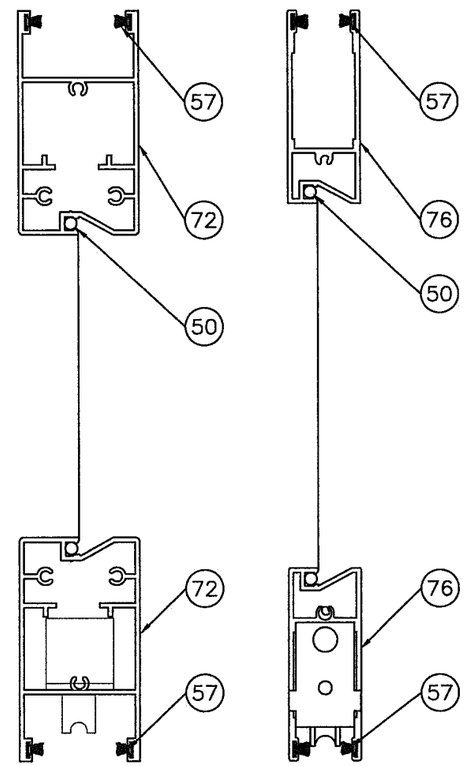

MT SCREEN VERTICAL CROSS SECTION

TO BE USED WITH 2TRACK, 2TRACK RETRO, 3TRACK AND 4TRACK FRAME SYSTEMS

BOX SCREEN VERTICAL CROSS SECTION

TO BE USED WITH 2TRACK WS AND 2TRACK RETRO WS FRAME SYSTEMS

EXTERIOR

PRODUCT REVISED
as complying with the Florida Building Code
NOA-No. 20-0814.04
Expiration Date 06/23/2026
By Ishaq I. Chanda
Miami-Dade Product Control

Revision: NO CHANGES THIS SHEET.

PREPARED BY A. LYNN MILLER
1070 TECHNOLOGY DRIVE
N. VENICE, FL 34275
(941) 480-1600
REGISTRATION #29296

WINDOOR® INCORPORATED

WINDOOR INCORPORATED
104 TRIPLE DIAMOND BLVD.
NORTH VENICE, FL 34275
(833) 554-5432

Series	Desc.	Sheet	DWG No.	Drawn By	Date	Rev.
SGD8100A	BOM & GLAZING DETAILS - REINF.	14 OF 35	8100-NI-NOA	ERIN KOSS	08/07/20	

Title: ALUMINUM SLIDING GLASS DOOR (NON-IMPACT)

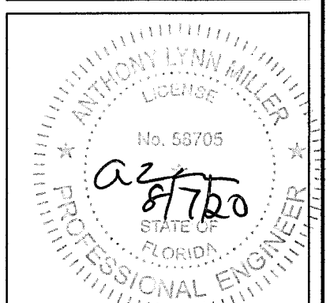

A. LYNN MILLER, P.E.
P.E.# 58705

BILL OF MATERIALS

ITEM NO.	PART NUMBER	DESCRIPTION	MANUFACTURER	MATERIAL
56	TP876	INTERLOCK BUMPER		RUBBER
57	W333517KOOOO	FINSEAL .187 x .350		
58	W332217KOOOO	FINSEAL .187 x .240		
59	W231417KOOOO	FINSEAL .187 x .140		
60	131017	#8 x 1/2" PH TEK SCREW		
61	S-44115	2 TRACK NS INSERT		
62	131018	#8 x 3/8" PH TYPE B SS		18-8 SS
63	131004	#10 x 1 1/ 4" TYPE F SS		
64	131020	#7 x 5/8 PH TYPE ASS		410 SS
65	131011	#8 x 2" FH TEK SCREW		410 SS
66	131009	#10 x 3/4" FH TEK SCREW		410 SS
67	LCS068-N5	SNAP IN SILL GATE		PLASTIC
68		SIKA 552, DOW 791, DOW 983	SIKA/DOW	POLYURETHANE/SILICONE
69	T-32122	5 TRACK SILL PAN	KEYMARK	ALUMINUM 6063-T6
70	S-44120	2 TRACK NS/WS RETRO SILL PAN	KEYMARK	ALUMINUM 6063-T6
71		NI GLAZING SEE SHEET 15		
72	FH-02727	MT SCREEN TOP/BOTTOM RAIL	KEYMARK	ALUMINUM 6063-T6
73	FH-02728	MT SCREEN STILE	KEYMARK	ALUMINUM 6063-T6
74	FH-02729	MT SCREEN STILE W/SEAL	KEYMARK	ALUMINUM 6063-T6
75	FS-02730	MT SCREEN ASTRAGAL	KEYMARK	ALUMINUM 6063-T6
76	FH-02300	BOX SCREEN TOP/BOTTOM RAIL	KEYMARK	ALUMINUM 6063-T6
77	FH-02395	BOX SCREEN STILE	KEYMARK	ALUMINUM 6063-T6
78	FS-02209	BOX SCREEN SWEEP	KEYMARK	ALUMINUM 6063-T6
79	FS-02650	BOX SCREEN ASTRAGAL	KEYMARK	ALUMINUM 6063-T6
80	7500 A04	SIGNITURE HANDLE SET		
81	T-32125	5 TRACK SILL INSERT	KEYMARK	ALUMINUM 6063-T6
82	TP990	GLASS SPACER	HELMA	ALUMINUM AW-3000
83		#8 x 3/4" PH TEK SCREW		
84		#10 x 3/4" PH TEK SCREW		
85	FS-04791	FIXED PANEL Z-CLIP	KEYMARK	ALUMINUM 6063-T6

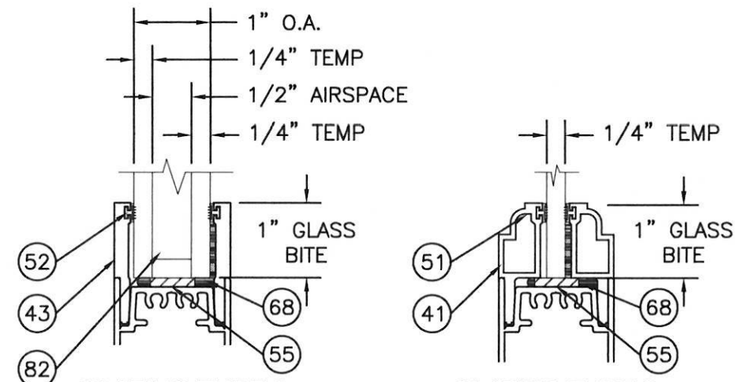

GLAZING TYPE A
NON-IMPACT
NON-REINFORCED & REINFORCED UNITS

GLAZING TYPE B
NON-IMPACT
NON-REINFORCED & REINFORCED UNITS

BILL OF MATERIALS CONTINUED FROM SHEET 14

EXTERIOR

PRODUCT REVISED
as complying with the Florida Building Code
NOA-No. 20-0814.04
Expiration Date 06/23/2026
By Ishaq I. Chanda
Miami-Dade Product Control

Revision: ADDED DOW 791 & DOW 983 TO BOM.

PREPARED BY A. LYNN MILLER
1070 TECHNOLOGY DRIVE
N. VENICE, FL 34275
(941) 480-1600
REGISTRATION #29296

Date: 08/07/20
Drawn By: ERIN KOSS
Rev.
Title: ALUMINUM SLIDING GLASS DOOR (NON-IMPACT)
Desc.: BOM & GLAZING DETAILS
DWG No.: 8100-NI-NOA
Series: SGD8100A
Sheet: 15 OF 35

WINDOOR® INCORPORATED
WINDOOR INCORPORATED
104 TRIPLE DIAMOND BLVD.
NORTH VENICE, FL 34275
(833) 554-5432

ANTHONY LYNN MILLER
LICENSE
No. 58705
8/7/20
STATE OF FLORIDA
PROFESSIONAL ENGINEER

A. LYNN MILLER, P.E.
P.E.# 58705

FOR ILLUSTRATION PURPOSES ONLY FOR INSTALLATION DETAILS REFER TO SHEETS 25-31

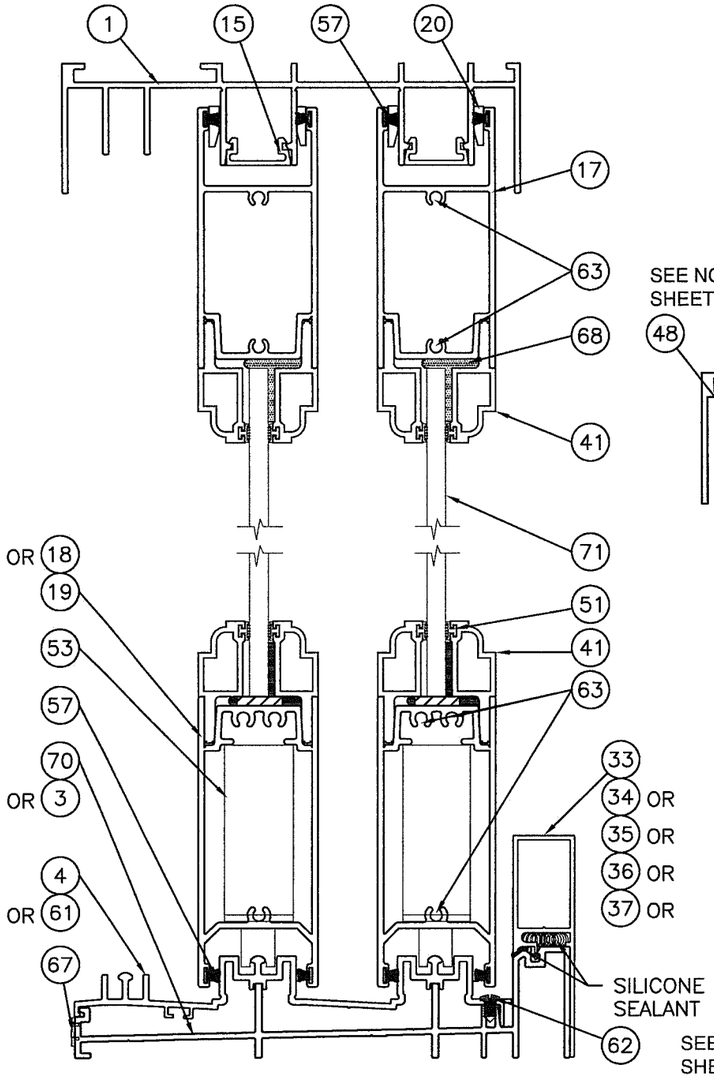

SECTION A

2 TRACK WS FRAME SYSTEM WITH 3" SILL RISER SHOWN, 2 TRACK NS , 2TRACK WS RETRO AND 2TRACK NS RETRO SILLS AND ALL SILL RISERS MAY BE USED. SEE D.P. TABLE SHEETS 9 & 10

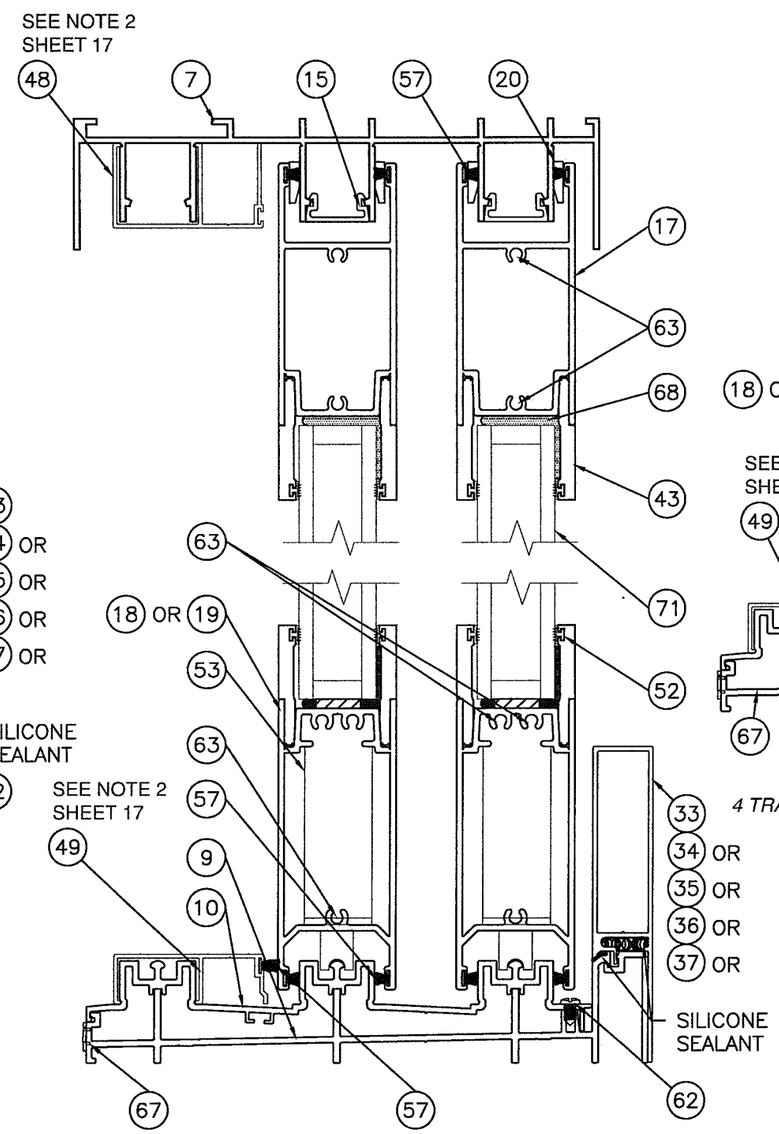

SECTION B

3 TRACK FRAME SYSTEM WITH 4 1/4" SILL RISER SHOWN, ALL SILL RISERS MAY BE USED. SEE D.P. TABLE SHEETS 9 & 10

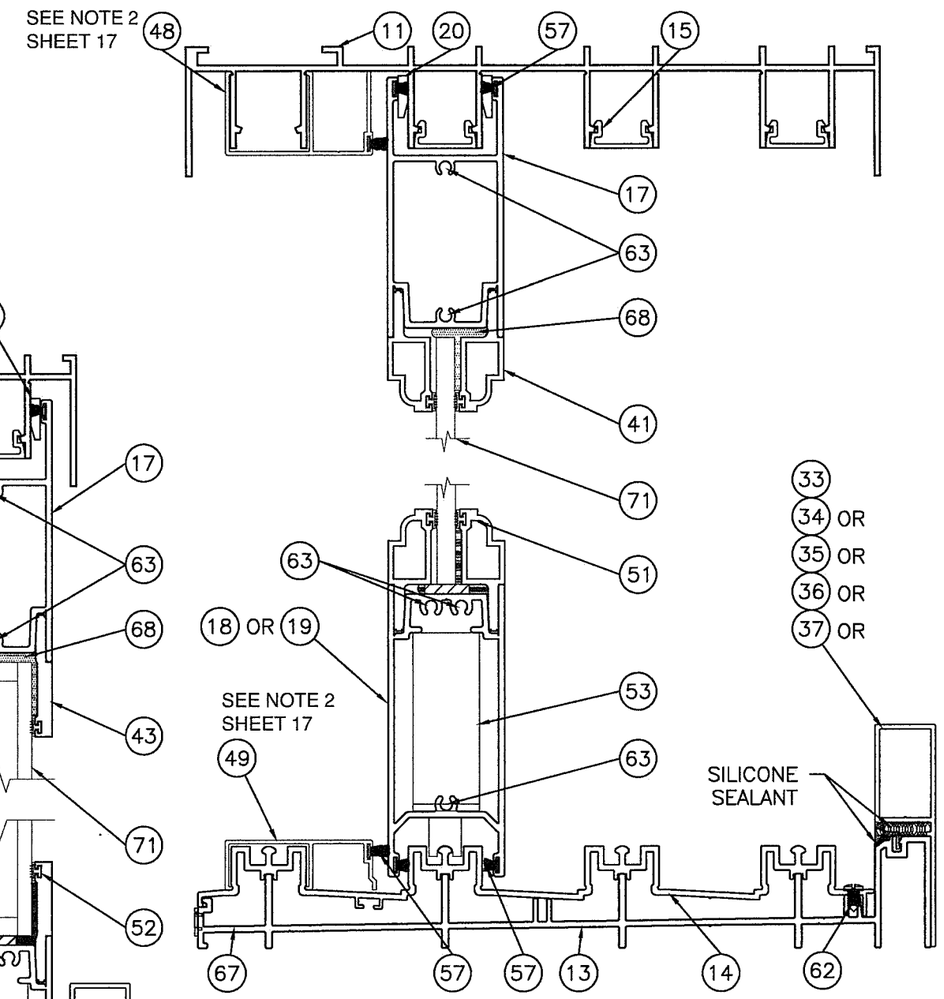

SECTION C

4 TRACK FRAME SYSTEM WITH 3" SILL RISER SHOWN, ALL SILL RISERS MAY BE USED. SEE D.P. TABLE SHEETS 9 & 10

EXTERIOR

PRODUCT REVISED
as complying with the Florida Building Code
NOA-No. 20-0814.04
Expiration Date 06/23/2026
By Ishwar I. Chanda
Miami-Dade Product Control

Revision: NO CHANGES THIS SHEET.

PREPARED BY A. LYNN MILLER
1070 TECHNOLOGY DRIVE
N. VENICE, FL 34275
(941) 480-1600
REGISTRATION #29296

WINDOOR® INCORPORATED
WINDOOR INCORPORATED
104 TRIPLE DIAMOND BLVD.
NORTH VENICE, FL 34275
(833) 554-5432

Series	Desc.	Sheet	DWG No.	Drawn By	Date	Rev.
SGD8100A	SECTION VIEWS - VERTICAL	16 OF 35	8100-NI-NOA	ERIN KOSS	08/07/20	

Title: ALUMINUM SLIDING GLASS DOOR (NON-IMPACT)

ANTHONY LYNN MILLER
LICENSE
No. 58705
STATE OF FLORIDA
PROFESSIONAL ENGINEER
8/7/20

A. LYNN MILLER, P.E.
P.E.# 58705

FOR ILLUSTRATION PURPOSES ONLY FOR INSTALLATION DETAILS REFER TO SHEETS 25-31

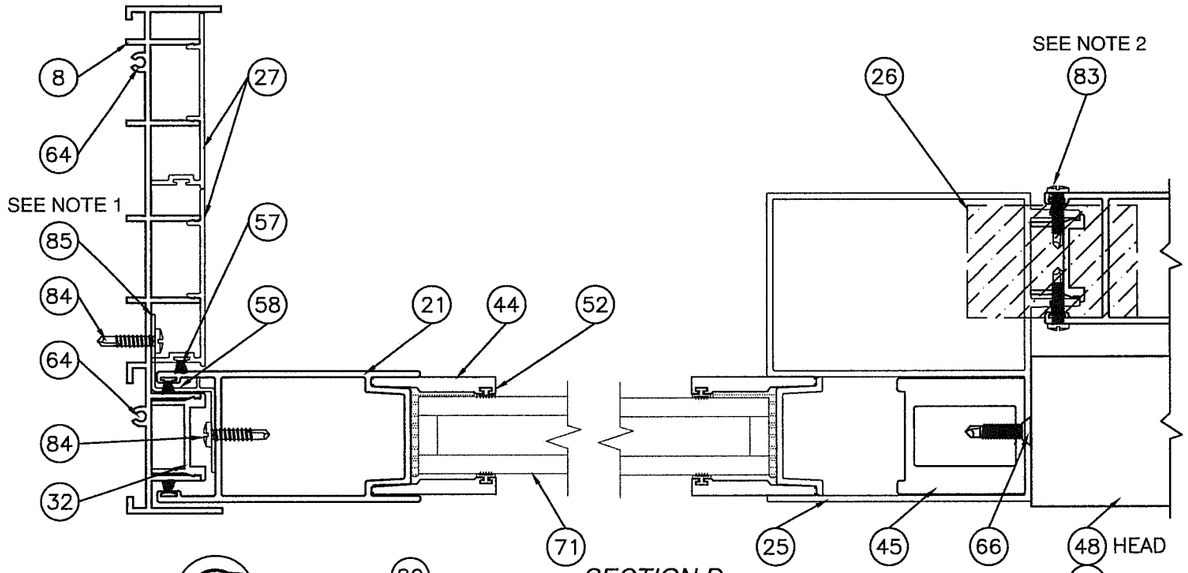

SECTION D
PLAIN STILE AT 3 TRACK JAMB

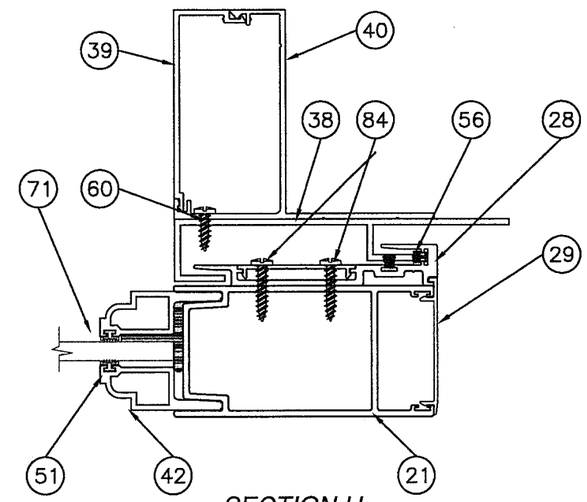

SECTION H
REINFORCED/NON REINFORCED INTERLOCK STILE AT EXTERIOR HOOK STRIP

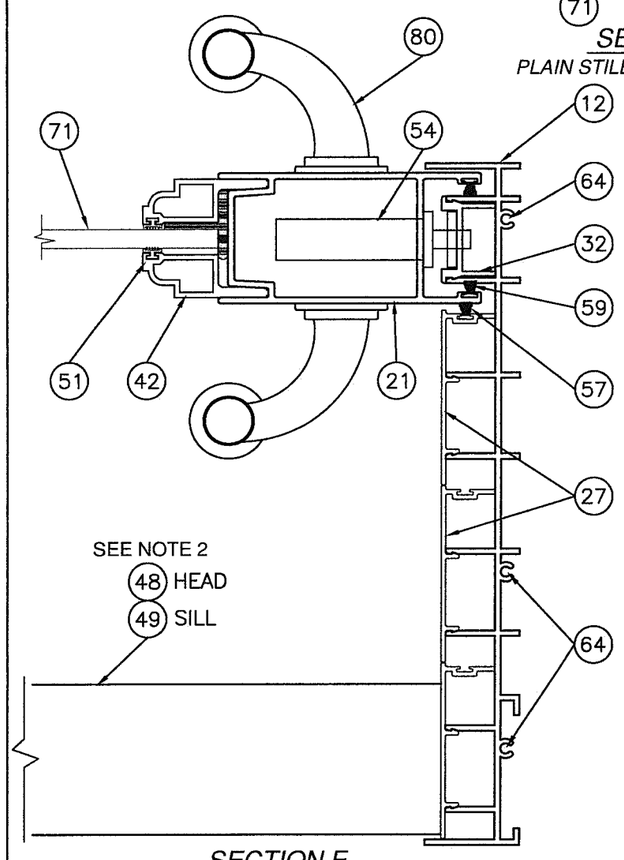

SECTION E
LOCK STILE AT 4 TRACK JAMB

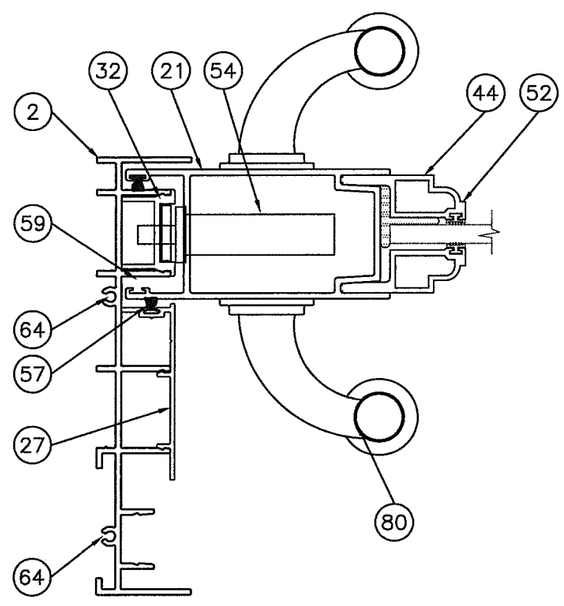

SECTION F
LOCK STILE AT 2 TRACK JAMB

NOTES:

1. FIXED PANEL TO JAMB CONDITION: FIXED PANEL IS SEURED TO THE JAMB WTH (2) ITEMS #85, FIXED PANEL Z–CLIP. ONE Z–CLIP IS LOCATED 24" FROM TOP OF THE PANEL DOWN AND 24" FROM BOTTOM OF PANEL UP. EACH Z–CLIP IS ATTACHED TO PANEL WITH (3) ITEM # 84, #10 x 3/4" PH TEK SCREWS AND THEN IT IS ATTACHED TO JAMB WITH (3) ITEM #84, #10 x 3/4" PH TEK SCREWS.
2. FIXED PANEL TO FIXED PANEL CONDITION: TWO FIXED PANELS ARE SECURED TOGETHER WITH ITEM #83, #8 x 3/4" PH TEK SCREW. THERE IS A ROW ON THE INTERIOR AND A ROW ON THE EXTERIOR OF THE FIXED PANEL SPACED 4" FROM THE TOP AND BOTTOM WITH ONE ADDITIONAL SCREW IN THE CENTER.

EXTERIOR

PRODUCT REVISED
as complying with the Florida Building Code
NOA–No. 20-0814.04
Expiration Date 06/23/2026
By Ishaq I. Chanda
Miami–Dade Product Control

Revision: NO CHANGES THIS SHEET.

PREPARED BY A. LYNN MILLER
1070 TECHNOLOGY DRIVE
N. VENICE, FL 34275
(941) 480-1600
REGISTRATION #29296

WINDOOR® INCORPORATED
WINDOOR INCORPORATED
104 TRIPLE DIAMOND BLVD.
NORTH VENICE, FL 34275
(833) 554-5432

Series	Desc.	Sheet	DWG No.	Rev.
SGD8100A	SECTION VIEWS - HORIZONTAL	17 OF 35	8100-NI-NOA	

Title	Drawn By	Date
ALUMINUM SLIDING GLASS DOOR (NON-IMPACT)	ERIN KOSS	08/07/20

ANTHONY LYNN MILLER
LICENSE
No. 58705
STATE OF FLORIDA
PROFESSIONAL ENGINEER
8/7/20

A. LYNN MILLER, P.E.
P.E.# 58705

FOR ILLUSTRATION PURPOSES ONLY FOR INSTALLATION DETAILS REFER TO SHEETS 25-31

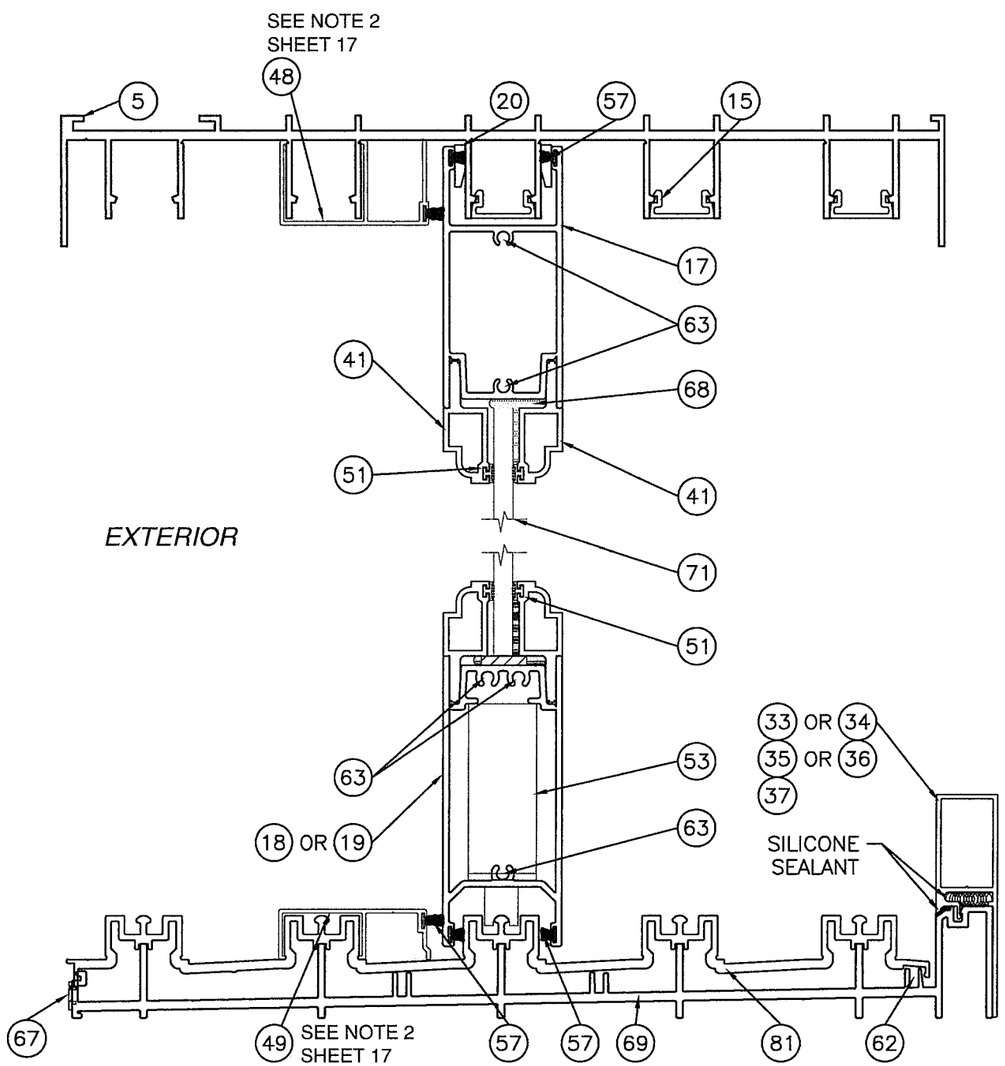

SECTION C

5 TRACK FRAME SYSTEM WITH 3" SILL RISER SHOWN, ALL SILL RISERS MAY BE USED
SEE D.P. TABLE SHEETS 9 & 10

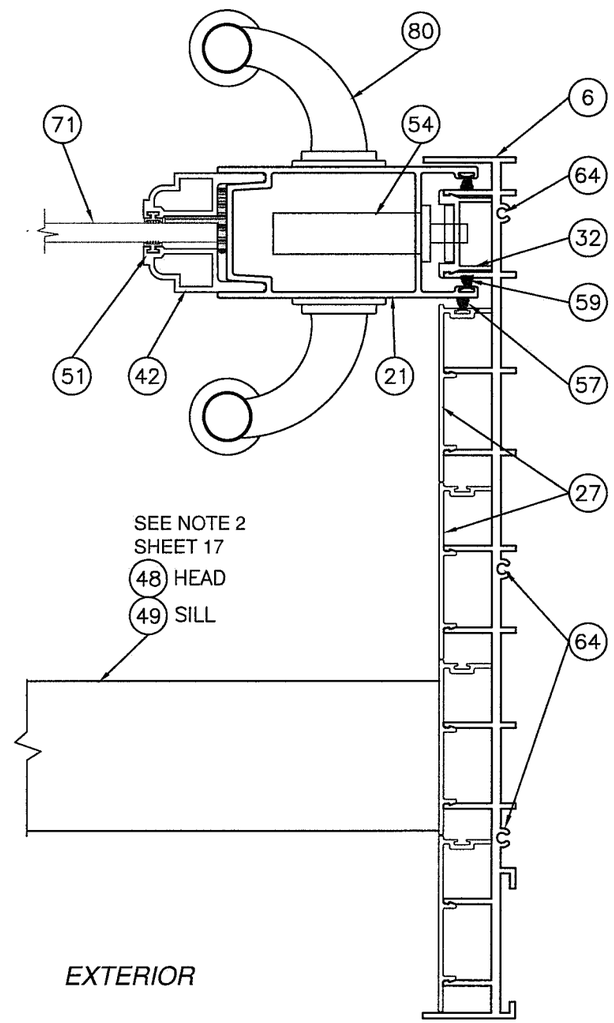

SECTION E

LOCK STILE AT 5 TRACK JAMB

PRODUCT REVISED
as complying with the Florida Building Code
NOA-No. 20-0814.04
Expiration Date 06/23/2026
By Ishaq I. Chanda
Miami-Dade Product Control

Revision: NO CHANGES THIS SHEET.

PREPARED BY A. LYNN MILLER
1070 TECHNOLOGY DRIVE
N. VENICE, FL 34275
(941) 480-1600
REGISTRATION #29296

WINDOOR® INCORPORATED
WINDOOR INCORPORATED
104 TRIPLE DIAMOND BLVD.
NORTH VENICE, FL 34275
(833) 554-5432

Series	Desc.	Sheet	DWG No.	Drawn By	Date	Rev.
SGD8100A	SECTION VIEWS - 5T	18 OF 35	8100-NI-NOA	ERIN KOSS	08/07/20	

Title: ALUMINUM SLIDING GLASS DOOR (NON-IMPACT)

ANTHONY LYNN MILLER
LICENSE
No. 58705
STATE OF FLORIDA
PROFESSIONAL ENGINEER
8/7/20

A. LYNN MILLER, P.E.
P.E.# 58705

FOR ILLUSTRATION PURPOSES ONLY FOR INSTALLATION DETAILS REFER TO SHEETS 25-31

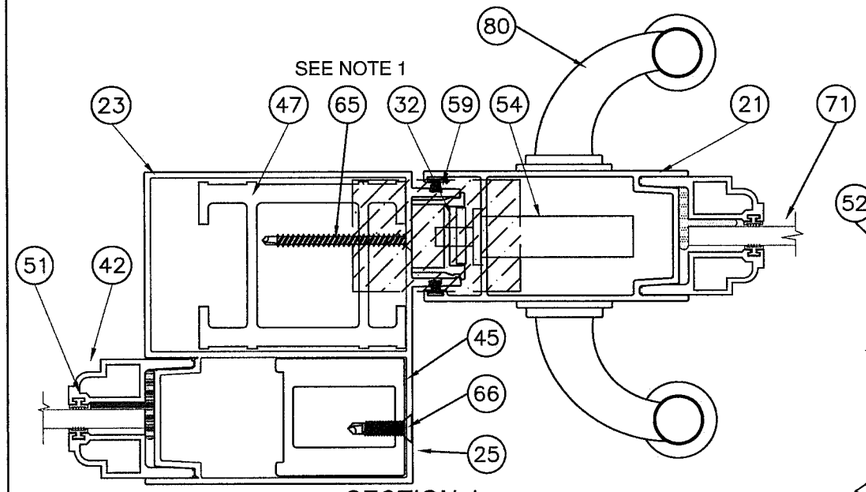

SECTION J

REINFORCED INTERIOR FIXED BUTT STILE TO LOCK STILE

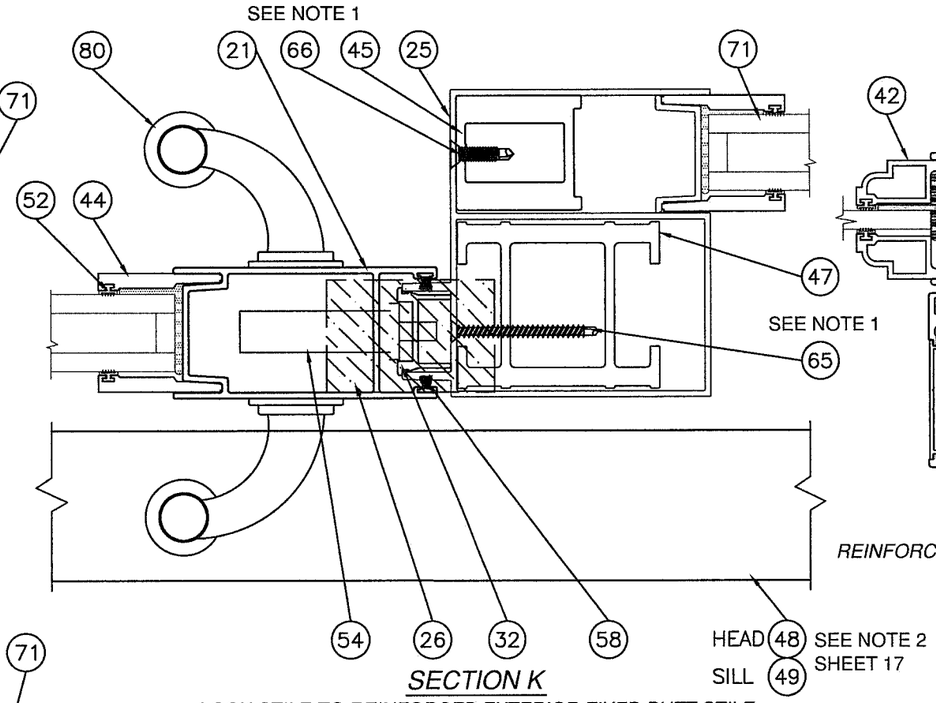

SECTION K

LOCK STILE TO REINFORCED EXTERIOR FIXED BUTT STILE

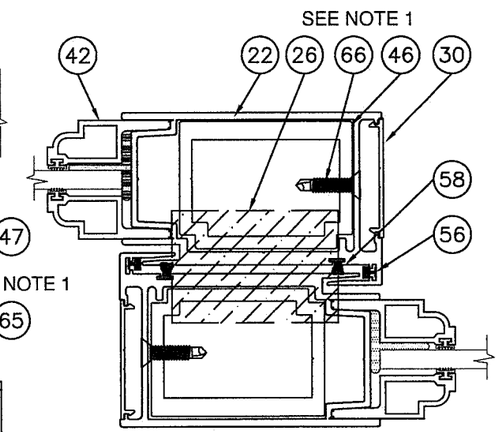

SECTION L

REINFORCED INTERLOCK STILE TO REINFORCED INTERLOCK STILE

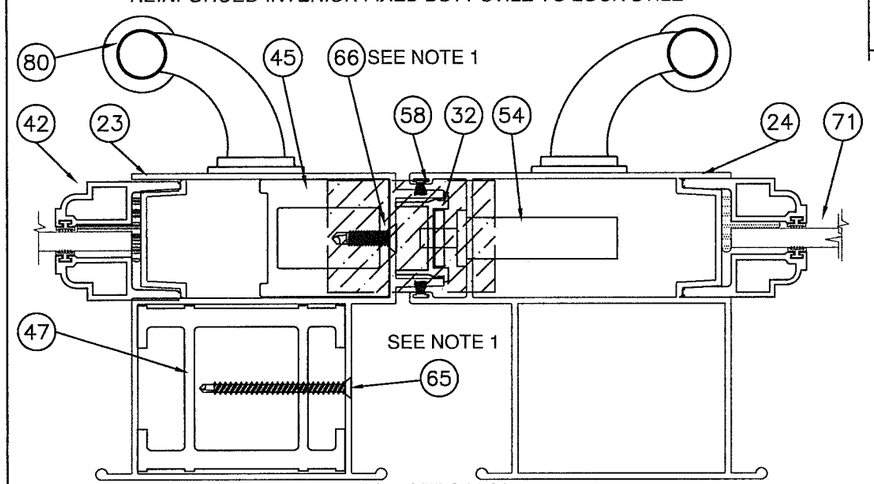

SECTION N

REINFORCED MALE BUTT STILE TO REINFORCED LOCKING BUTT STILE

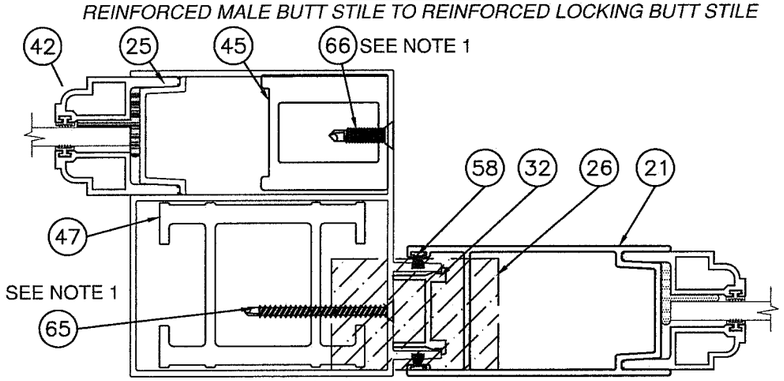

SECTION M

REINFORCED EXTERIOR FIXED BUTT STILE TO PLAIN STILE

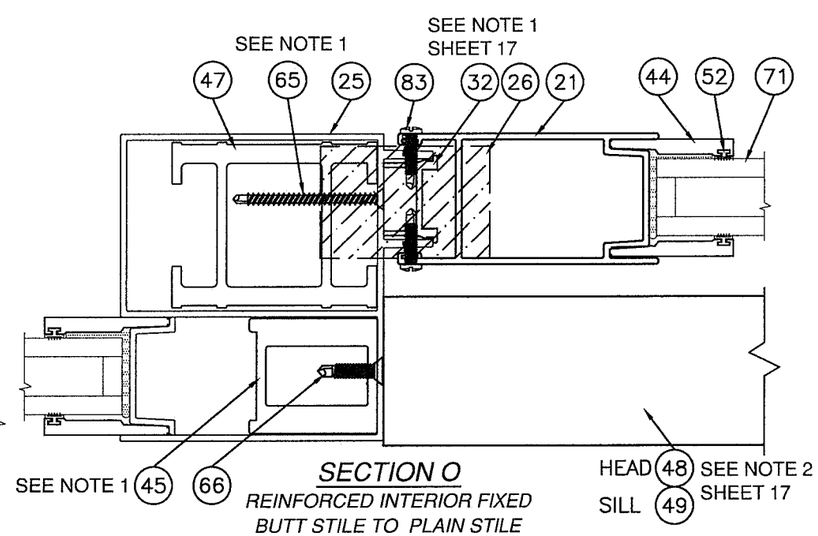

SECTION O

REINFORCED INTERIOR FIXED BUTT STILE TO PLAIN STILE

NOTES:

1. REINFORCING BAR NOTE: ITEM #46, INTERLOCK REINFORCING BAR IS SECURED TO INTERLOCK WITH ITEM #66. ITEM #47, FEMALE BUTT STILE REINFORCING BAR IS SECURED TO FEMALE BUTT STILE AND FEMALE BUTT STILE OFFSET WITH ITEM #65. ITEM #45, 6000 BUTT STILE REINFORCING BAR IS SECURED TO FEMALE BUTT STILE AND FEMALE BUTT STILE OFFSET WITH ITEM #66. ALL SCREWS ARE SPACED 6" FROM TOP AND BOTTOM OF STILES AND ONE AT MIDSPAN.

EXTERIOR

PRODUCT REVISED
as complying with the Florida Building Code
NOA-No. 20-0814.04
Expiration Date 06/23/2026
By Ishaq I. Chanda
Miami-Dade Product Control

Revision: NO CHANGES THIS SHEET.

PREPARED BY A. LYNN MILLER
1070 TECHNOLOGY DRIVE
N. VENICE, FL 34275
(941) 480-1600
REGISTRATION #29296

WINDOOR® INCORPORATED
WINDOOR INCORPORATED
104 TRIPLE DIAMOND BLVD.
NORTH VENICE, FL 34275
(833) 554-5432

Title:	ALUMINUM SLIDING GLASS DOOR (NON-IMPACT)	Date	08/07/20
Desc.:	SECTION VIEWS - HORIZONTAL	Drawn By	ERIN KOSS
Series	SGD8100A	Sheet	19 OF 35
		DWG No.	8100-NI-NOA
		Rev.	

ANTHONY LYNN MILLER
LICENSE
No. 58705
STATE OF FLORIDA
PROFESSIONAL ENGINEER
8/7/20

A. LYNN MILLER, P.E.
P.E.# 58705

FOR ILLUSTRATION PURPOSES ONLY FOR INSTALLATION DETAILS REFER TO SHEETS 25-31

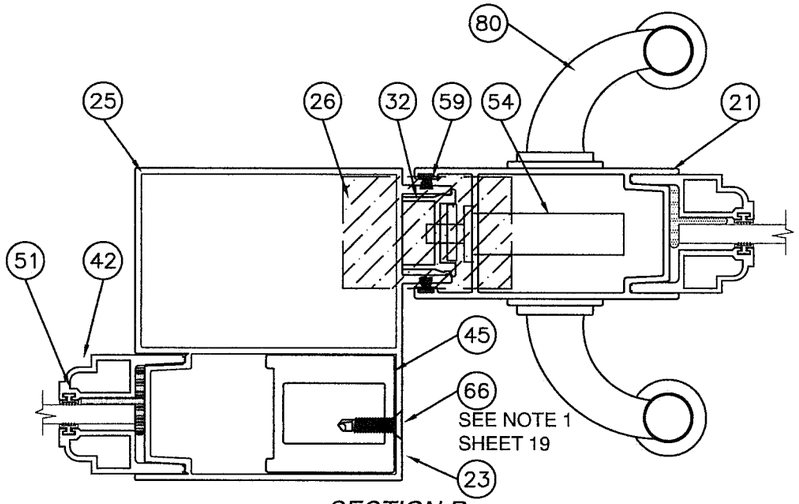

SECTION P

NON-REINFORCED INTERIOR FIXED BUTT STILE TO LOCK STILE

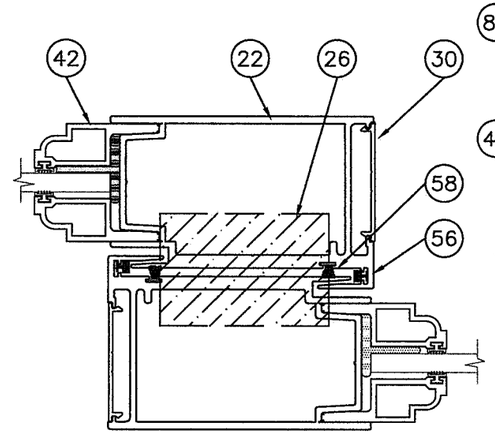

SECTION R

NON-REINFORCED INTERLOCK STILE TO NON-REINFORCED INTERLOCK STILE

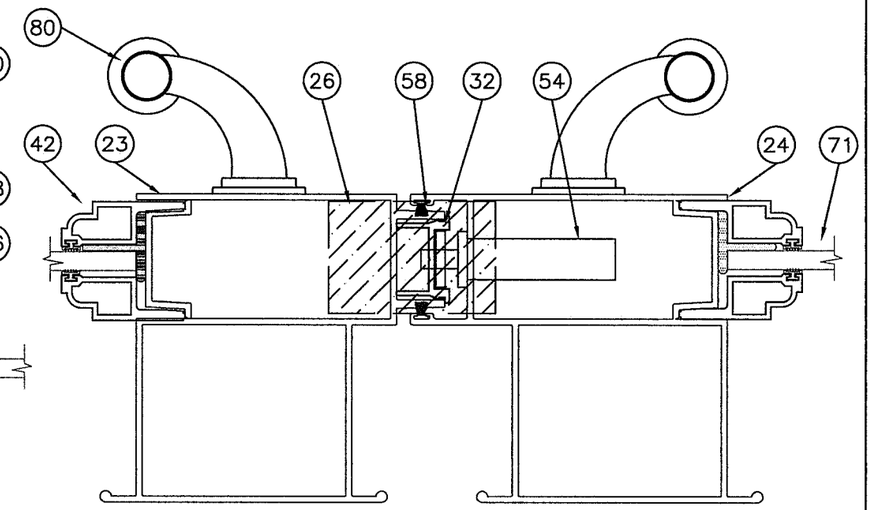

SECTION T

NON-REINFORCED MALE BUTT STILE TO NON-REINFORCED LOCKING BUTT STILE

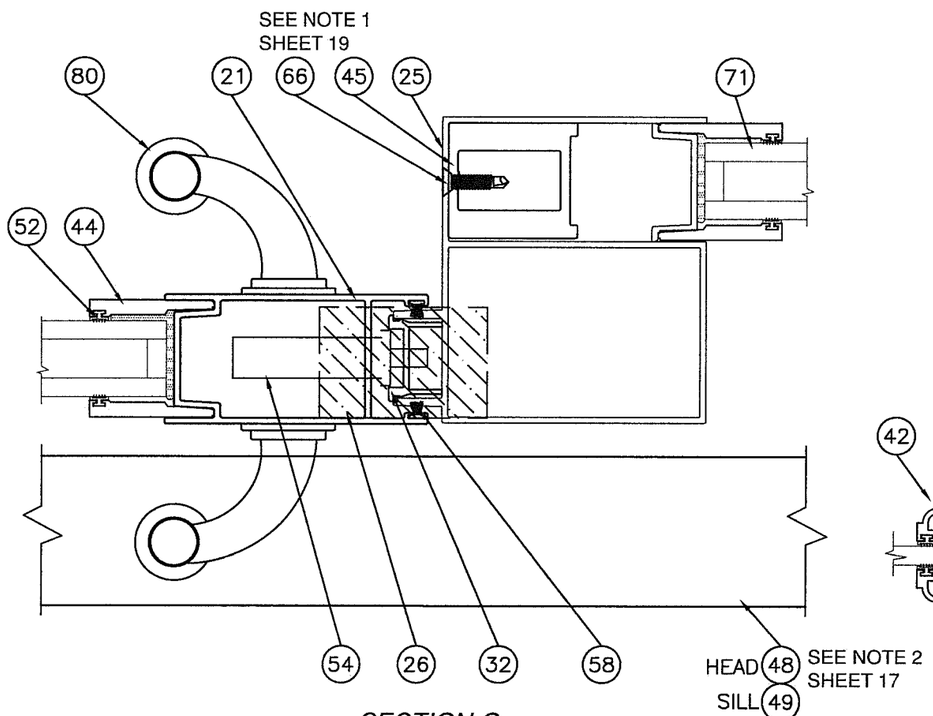

SECTION Q

LOCK STILE TO NON-REINFORCED EXTERIOR FIXED BUTT STILE

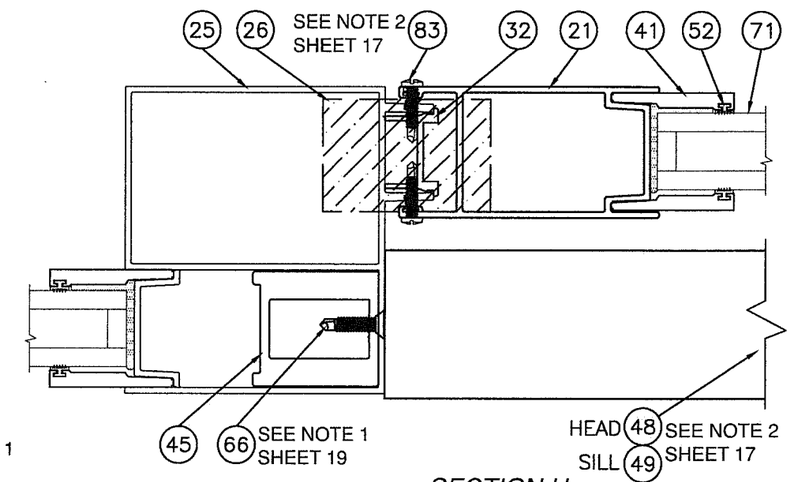

SECTION U

NON-REINFORCED INTERIOR FIXED BUTT STILE TO PLAIN STILE

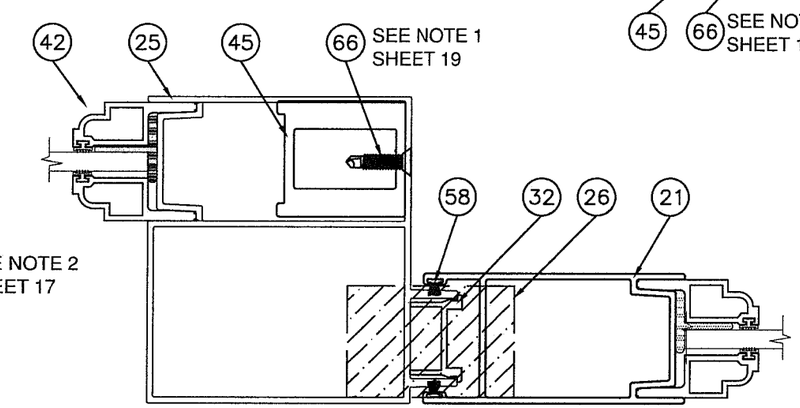

SECTION S

NON-REINFORCED EXTERIOR FIXED BUTT STILE TO PLAIN STILE

EXTERIOR

PRODUCT REVISED
as complying with the Florida Building Code
NOA-No. 20-0814.04
Expiration Date 06/23/2026
By Ishaq I. Chanda
Miami-Dade Product Control

Revision: NO CHANGES THIS SHEET.

PREPARED BY A. LYNN MILLER
1070 TECHNOLOGY DRIVE
N. VENICE, FL 34275
(941) 480-1600
REGISTRATION #29296

Rev.	Date	Drawn By	DWG No.	Sheet	Series
	08/07/20	ERIN KOSS	8100-NI-NOA	20 OF 35	SGD8100A

Title: ALUMINUM SLIDING GLASS DOOR (NON-IMPACT)
Desc.: SECTION VIEWS - HORIZONTAL

WINDOOR® INCORPORATED
WINDOOR INCORPORATED
104 TRIPLE DIAMOND BLVD.
NORTH VENICE, FL 34275
(833) 554-5432

ANTHONY LYNN MILLER
LICENSE
No. 58705
STATE OF FLORIDA
PROFESSIONAL ENGINEER
8/7/20

A. LYNN MILLER, P.E.
P.E.# 58705

FOR ILLUSTRATION PURPOSES ONLY FOR INSTALLATION DETAILS REFER TO SHEETS 25-31

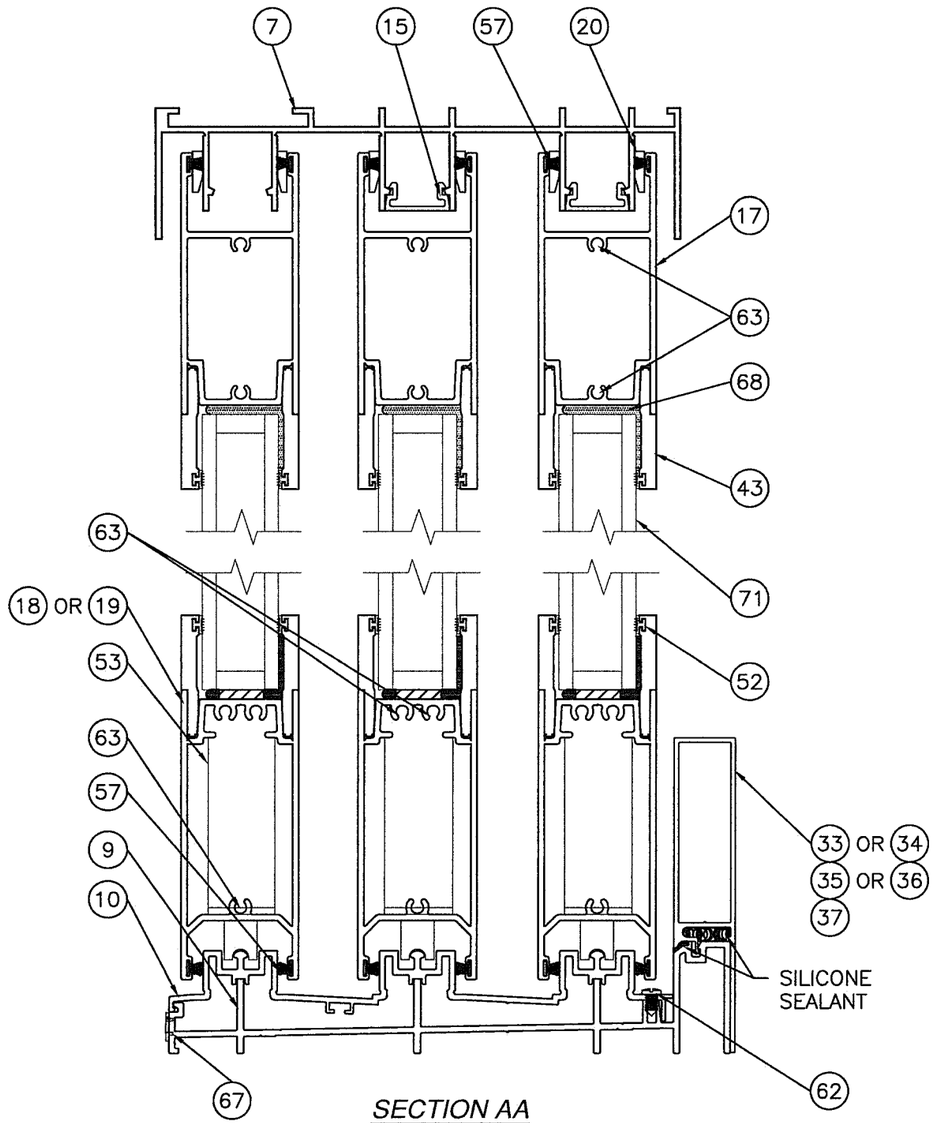

SECTION AA

3 TRACK FRAME SYSTEM

SEE D.P. TABLE SHEETS 9 & 10

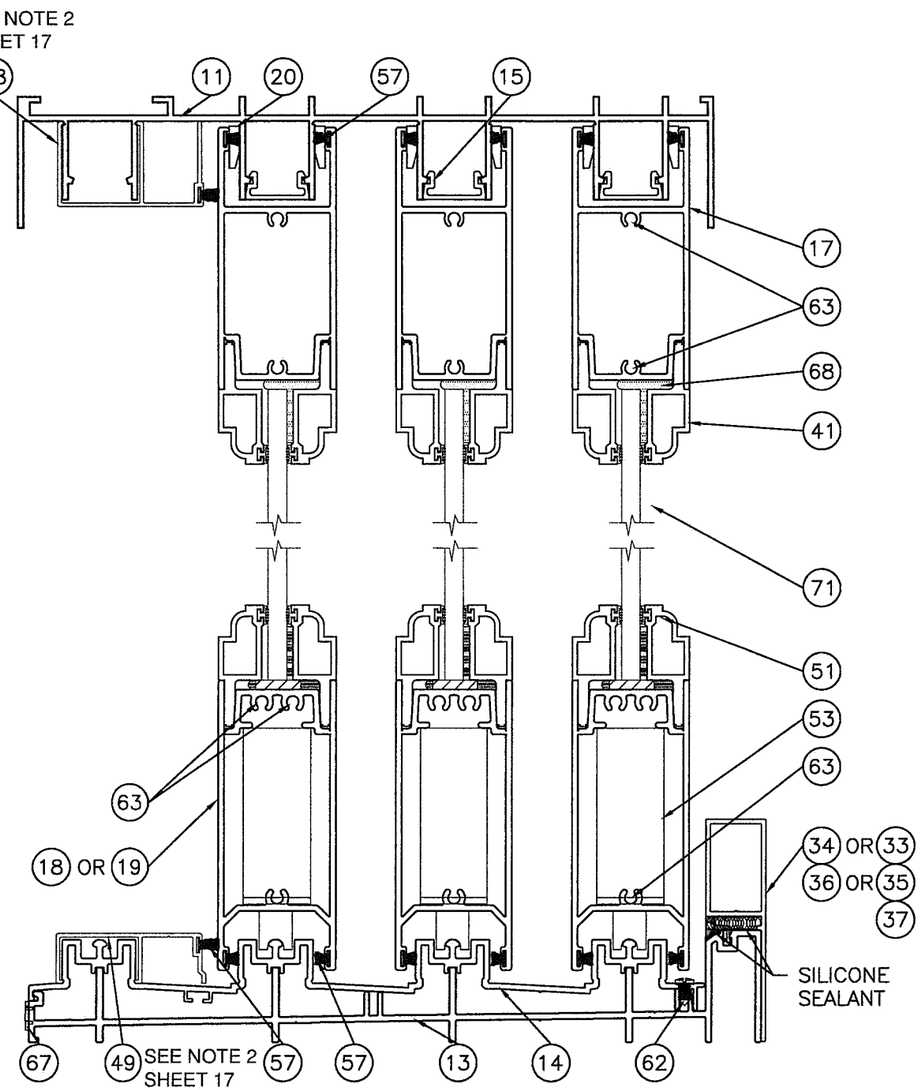

SECTION BB

4 TRACK FRAME SYSTEM

SEE D.P. TABLE SHEETS 9 & 10

EXTERIOR

PRODUCT REVISED
as complying with the Florida Building Code
NOA-No. 20-0814.04
Expiration Date 06/23/2026
By Ishaq I. Chanda
Miami-Dade Product Control

Revision: NO CHANGES THIS SHEET.

PREPARED BY A. LYNN MILLER
1070 TECHNOLOGY DRIVE
N. VENICE, FL 34275
(941) 480-1600
REGISTRATION #29296

WINDOOR® INCORPORATED

WINDOOR INCORPORATED
104 TRIPLE DIAMOND BLVD.
NORTH VENICE, FL 34275
(833) 554-5432

Rev.	Date	Drawn By	DWG No.	Sheet	Series	Desc.	Title
	08/07/20	ERIN KOSS	8100-NI-NOA	21 OF 35	SGD8100A	SECTION VIEWS - VERTICAL	ALUMINUM SLIDING GLASS DOOR (NON-IMPACT)

ANTHONY LYNN MILLER
LICENSE
No. 58705
STATE OF FLORIDA
PROFESSIONAL ENGINEER
8/7/20

A. LYNN MILLER, P.E.
P.E.# 58705

FOR ILLUSTRATION PURPOSES ONLY FOR INSTALLATION DETAILS REFER TO SHEETS 25-31

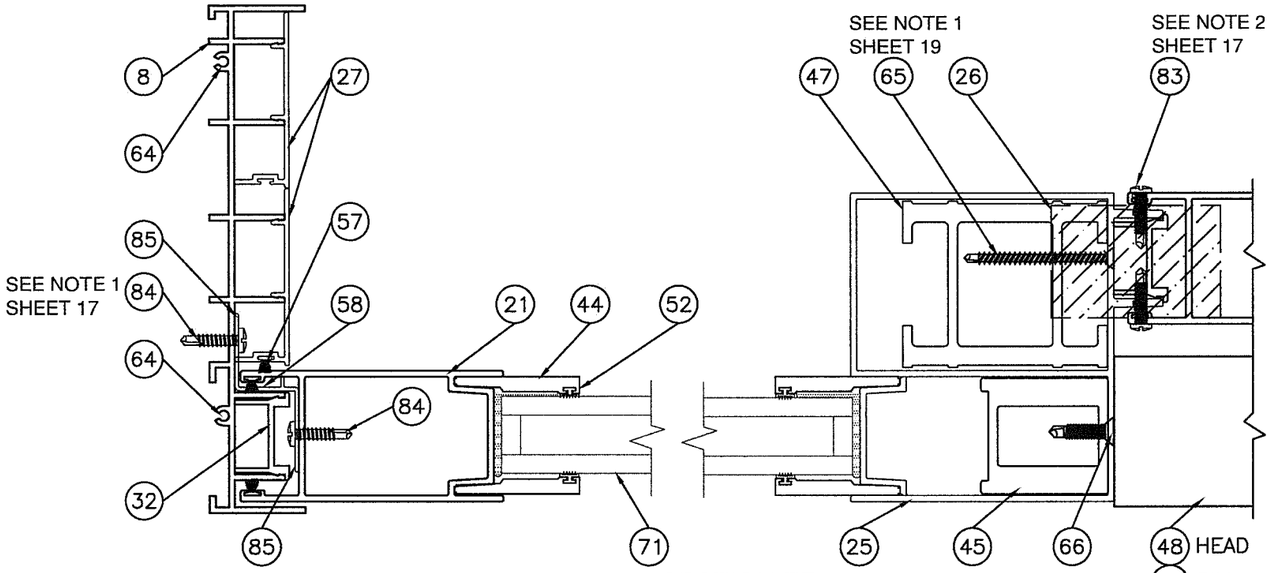

SECTION EE

PLAIN STILE AT 3 TRACK JAMB

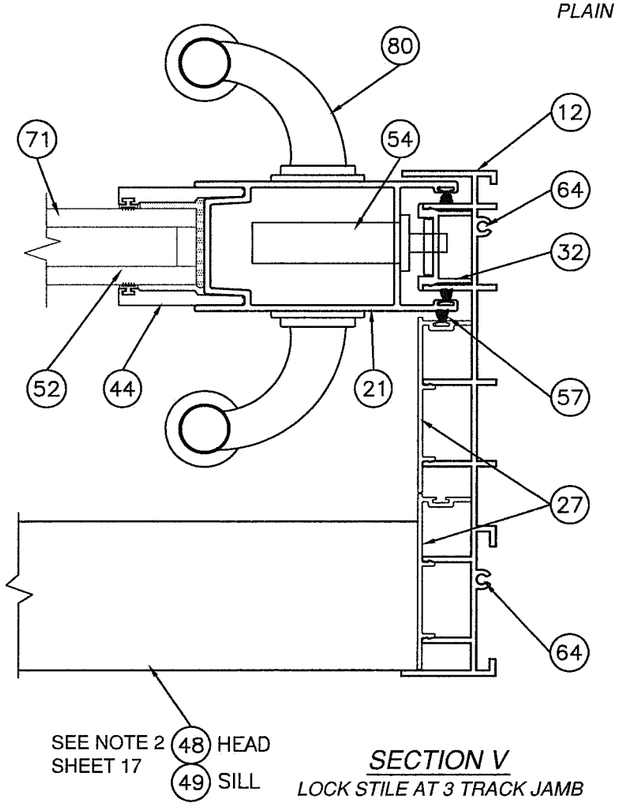

SECTION V

LOCK STILE AT 3 TRACK JAMB

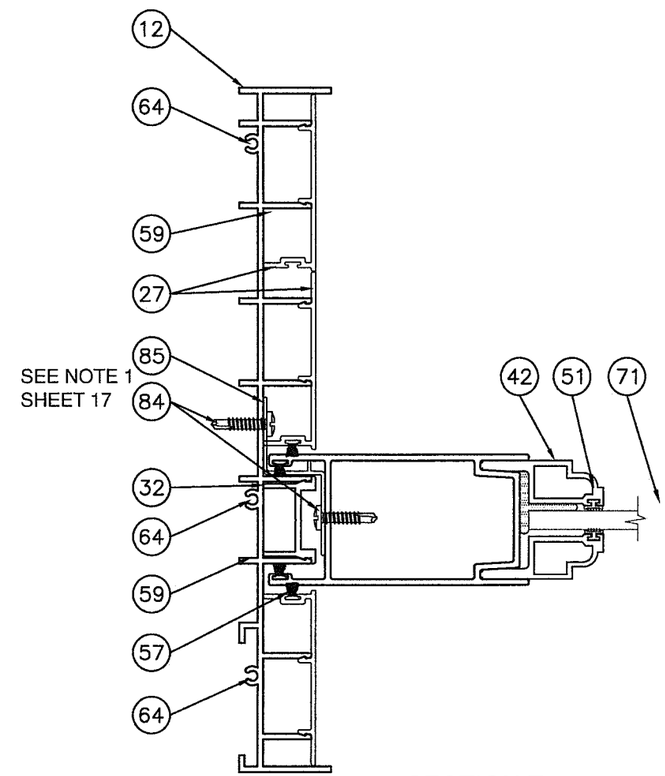

SECTION Z

FIXED PANEL AT 4 TRACK JAMB

EXTERIOR

PRODUCT REVISED
as complying with the Florida Building Code
NOA-No. 20-0814.04
Expiration Date 06/23/2026
By Ishaq I. Chanda
Miami-Dade Product Control

Revision: NO CHANGES THIS SHEET.

WINDOOR® INCORPORATED
WINDOOR INCORPORATED
104 TRIPLE DIAMOND BLVD.
NORTH VENICE, FL 34275
(833) 554-5432

PREPARED BY A. LYNN MILLER
1070 TECHNOLOGY DRIVE
N. VENICE, FL 34275
(941) 480-1600
REGISTRATION #29296

Series	Desc.	Sheet	DWG No.	Drawn By	Date	Rev.
SGD8100A	SECTION VIEWS - HORIZONTAL	22 OF 35	8100-NI-NOA	ERIN KOSS	08/07/20	

Title: ALUMINUM SLIDING GLASS DOOR (NON-IMPACT)

ANTHONY LYNN MILLER
LICENSE
No. 58705
STATE OF FLORIDA
PROFESSIONAL ENGINEER
8/7/20

A. LYNN MILLER, P.E.
P.E.# 58705

FOR ILLUSTRATION PURPOSES ONLY FOR INSTALLATION DETAILS REFER TO SHEETS 25-31

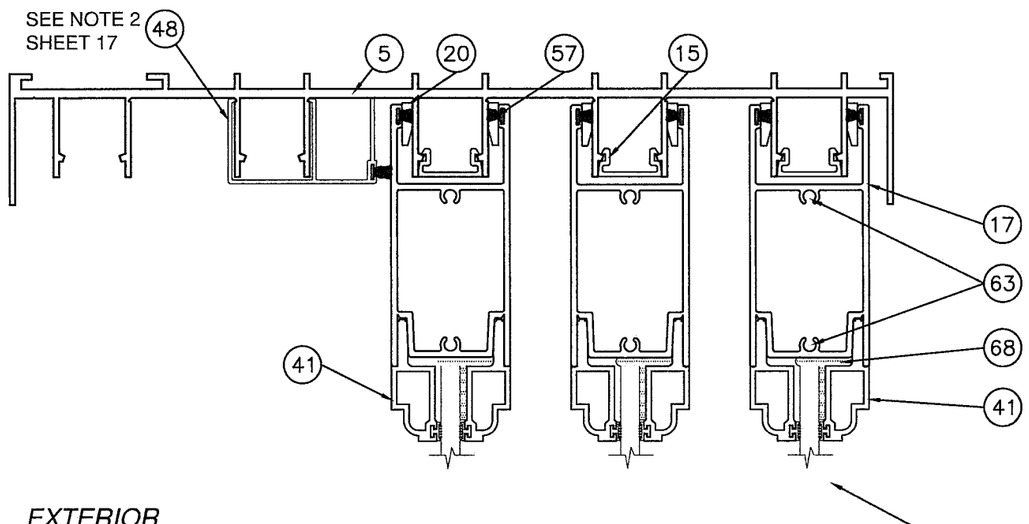

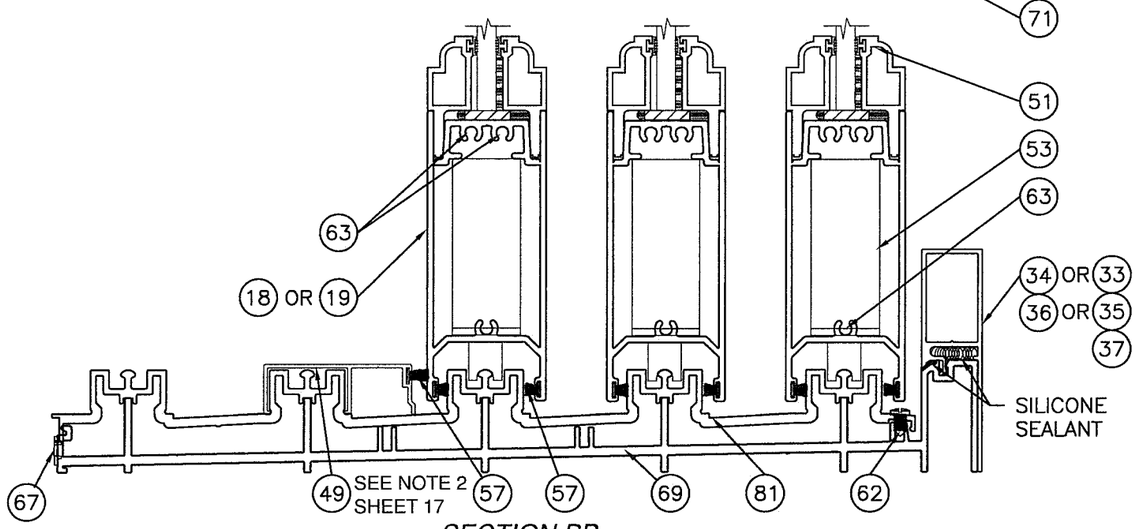

SECTION BB

5 TRACK FRAME SYSTEM
SEE D.P. TABLE SHEETS 9 & 10

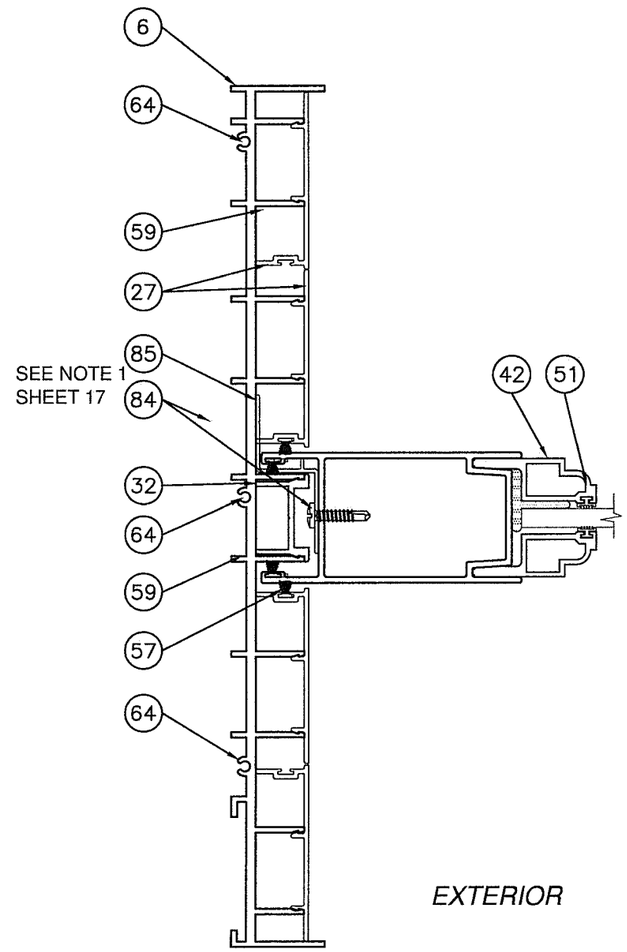

SECTION Z

FIXED PANEL AT 5 TRACK JAMB

PRODUCT REVISED
as complying with the Florida Building Code
NOA-No. 20-0814.04
Expiration Date 06/23/2026
By Ishaq I. Chanda
Miami-Dade Product Control

Revision: NO CHANGES THIS SHEET.

WINDOOR® INCORPORATED
WINDOOR INCORPORATED
104 TRIPLE DIAMOND BLVD.
NORTH VENICE, FL 34275
(833) 554-5432

PREPARED BY A. LYNN MILLER
1070 TECHNOLOGY DRIVE
N. VENICE, FL 34275
(941) 480-1600
REGISTRATION #29296

Series	Desc.	Sheet	DWG No.	Drawn By	Date	Rev.
ALUMINUM SLIDING GLASS DOOR (NON-IMPACT)	SECTION VIEWS - 5T	23 OF 35	8100-NI-NOA	ERIN KOSS	08/07/20	

ANTHONY LYNN MILLER
LICENSE
No. 58705
STATE OF FLORIDA
PROFESSIONAL ENGINEER
8/7/20

A. LYNN MILLER, P.E.
P.E.# 58705

FOR ILLUSTRATION PURPOSES ONLY FOR INSTALLATION DETAILS REFER TO SHEETS 25-31

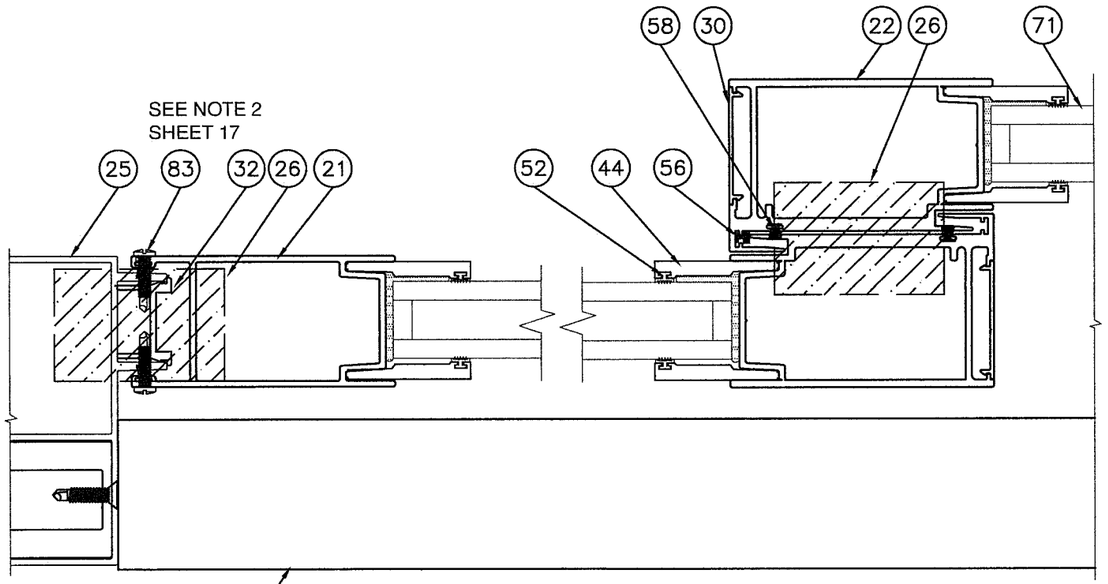

SECTION DD

NON-REINFORCED FIXED PANEL TO FIXED PANEL AND INTERLOCK

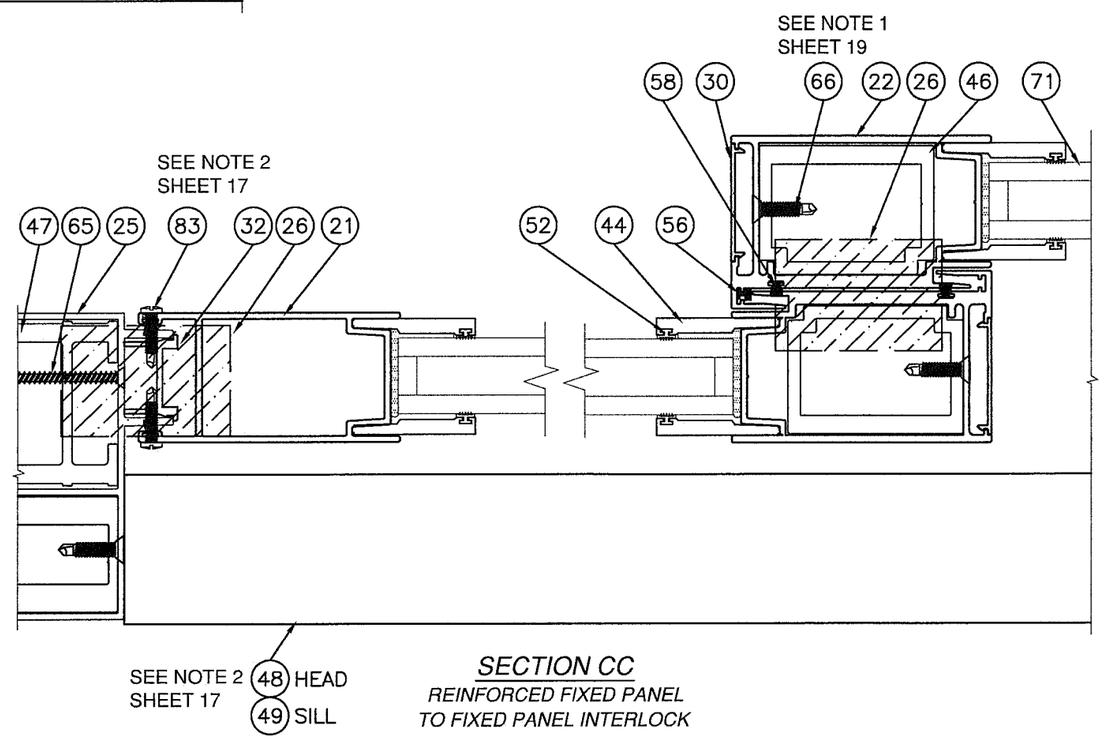

SECTION CC

REINFORCED FIXED PANEL TO FIXED PANEL INTERLOCK

EXTERIOR

PRODUCT REVISED
as complying with the Florida Building Code
NOA-No. 20-0814.04
Expiration Date 06/23/2026
By Ishaq I. Chanda
Miami-Dade Product Control

Revision: NO CHANGES THIS SHEET.

PREPARED BY A. LYNN MILLER
1070 TECHNOLOGY DRIVE
N. VENICE, FL 34275
(941) 480-1600
REGISTRATION #29296

WINDOOR® INCORPORATED

WINDOOR INCORPORATED
104 TRIPLE DIAMOND BLVD.
NORTH VENICE, FL 34275
(833) 554-5432

Title	ALUMINUM SLIDING GLASS DOOR (NON-IMPACT)
Desc.	SECTION VIEWS - HORIZONTAL
Series	SGD8100A
Sheet	24 OF 35
DWG No.	8100-NI-NOA
Drawn By	ERIN KOSS
Date	08/07/20
Rev.	

ANTHONY LYNN MILLER
LICENSE
No. 58705
STATE OF FLORIDA
PROFESSIONAL ENGINEER
8/7/20

A. LYNN MILLER, P.E.
P.E.# 58705

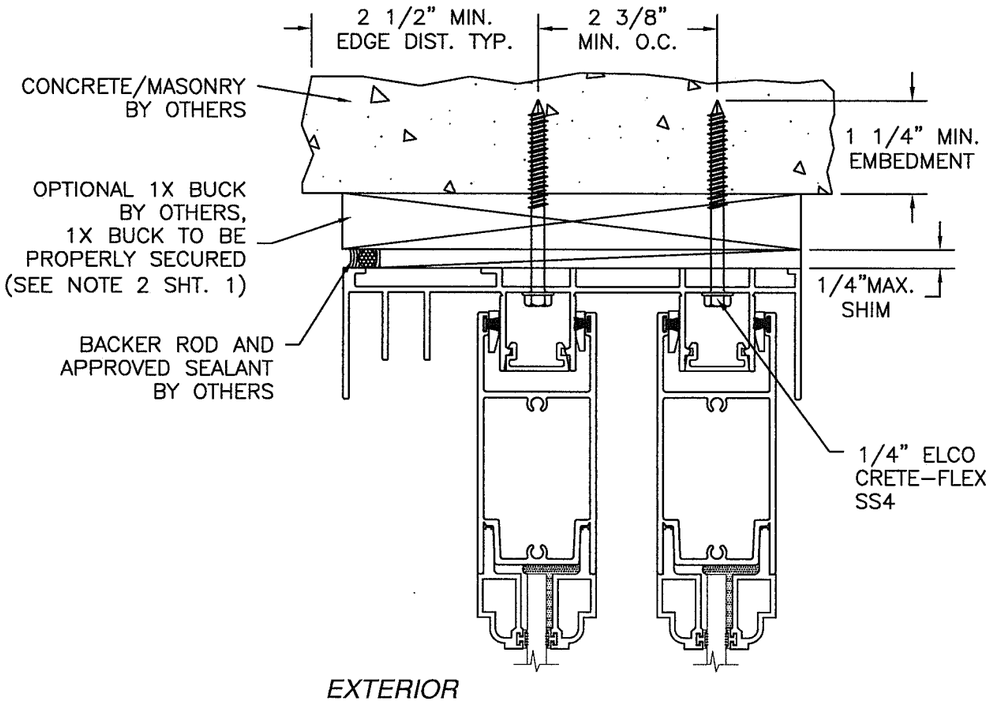

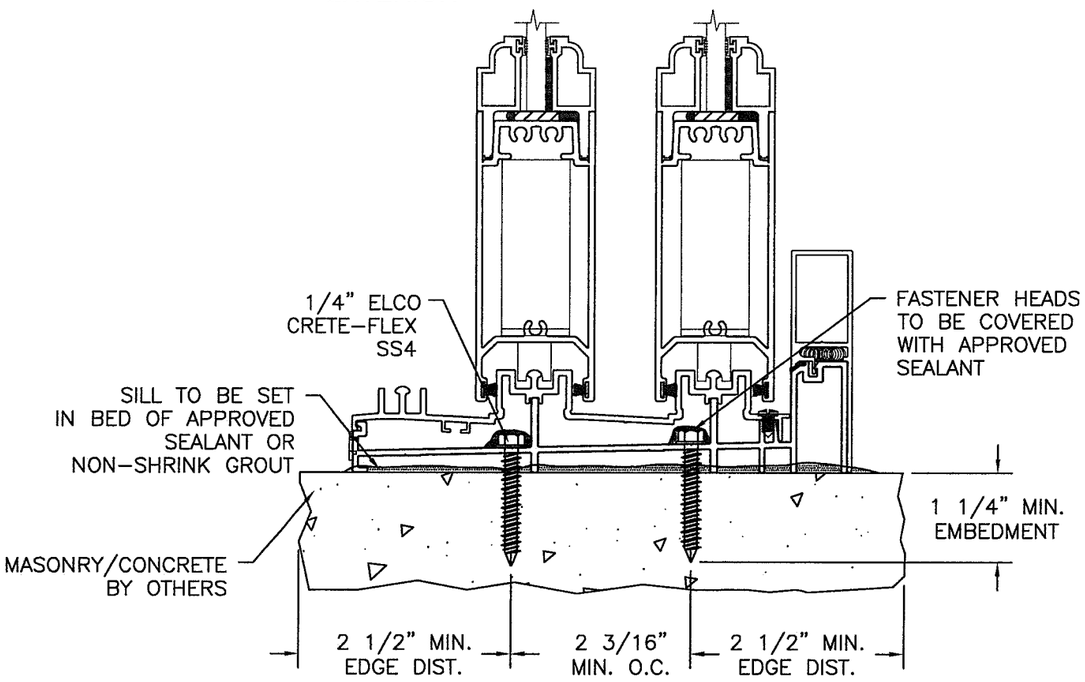

2 TRACK FRAME VERTICAL INSTALLATION

MASONRY/CONCRETE INSTALLATION

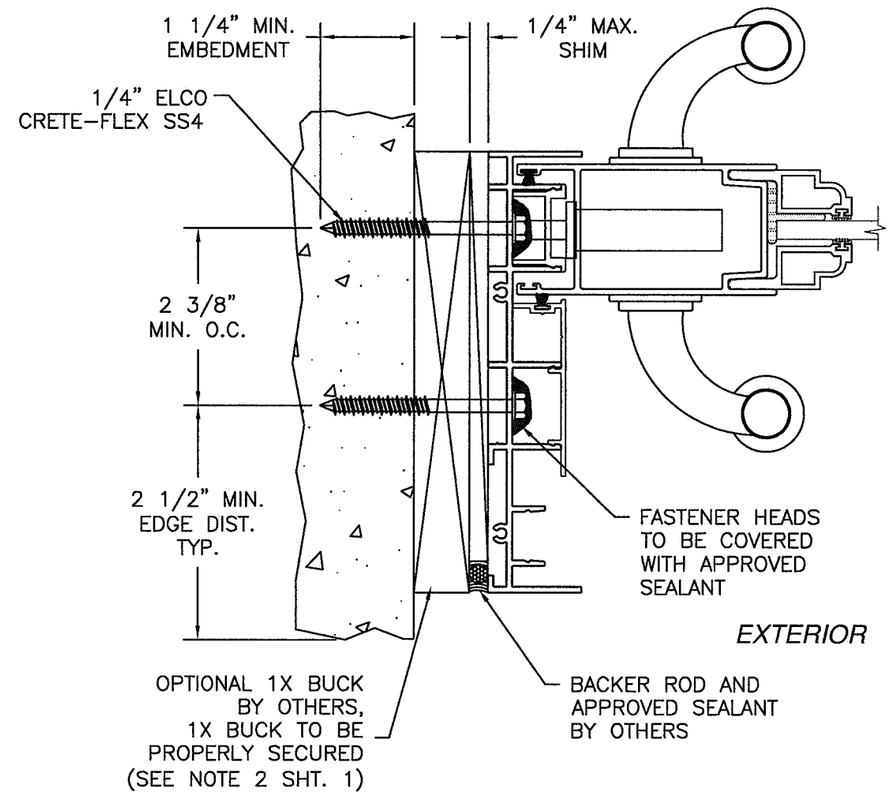

2 TRACK FRAME JAMB INSTALLATION

1X BUCK TO MASONRY/CONCRETE INSTALLATION.

NOTES:

1. CONCRETE SUBSTRATE INSTALLATION FOR 2 TRACK SHOWN. ANCHORAGE SIMILAR FOR 3 TRACK AND 4 TRACK SYSTEMS. SEE SHEET 13 FOR O.C. ANCHOR SEPARATION.
2. 2 TRACK WITH 3" SILL RISER SHOWN. 3 TRACK, 4 TRACK & 5 TRACK ARE SIMILAR. ALL APPLICABLE SILL RISERS MAYBE USED. SEE D.P. TABLES SHEETS 9 & 10.

PRODUCT REVISED
as complying with the Florida Building Code
NOA-No. 20-0814.04
Expiration Date 06/23/2026
By Ishwar I. Chanda
Miami-Dade Product Control

Revision: NO CHANGES THIS SHEET.

PREPARED BY A. LYNN MILLER
1070 TECHNOLOGY DRIVE
N. VENICE, FL 34275
(941) 480-1600
REGISTRATION #29296

Rev.	Date	Drawn By	DWG No.	Sheet	Series	Desc.	Title
	08/07/20	ERIN KOSS	8100-NI-NOA	25 OF 35	SGD8100A	INSTALLATION DETAILS - MASONRY	ALUMINUM SLIDING GLASS DOOR (NON-IMPACT)

WINDOOR® INCORPORATED
WINDOOR INCORPORATED
104 TRIPLE DIAMOND BLVD.
NORTH VENICE, FL 34275
(833) 554-5432

ANTHONY LYNN MILLER
LICENSE
No. 56705
STATE OF FLORIDA
PROFESSIONAL ENGINEER
8/7/20

A. LYNN MILLER, P.E.
P.E.# 58705

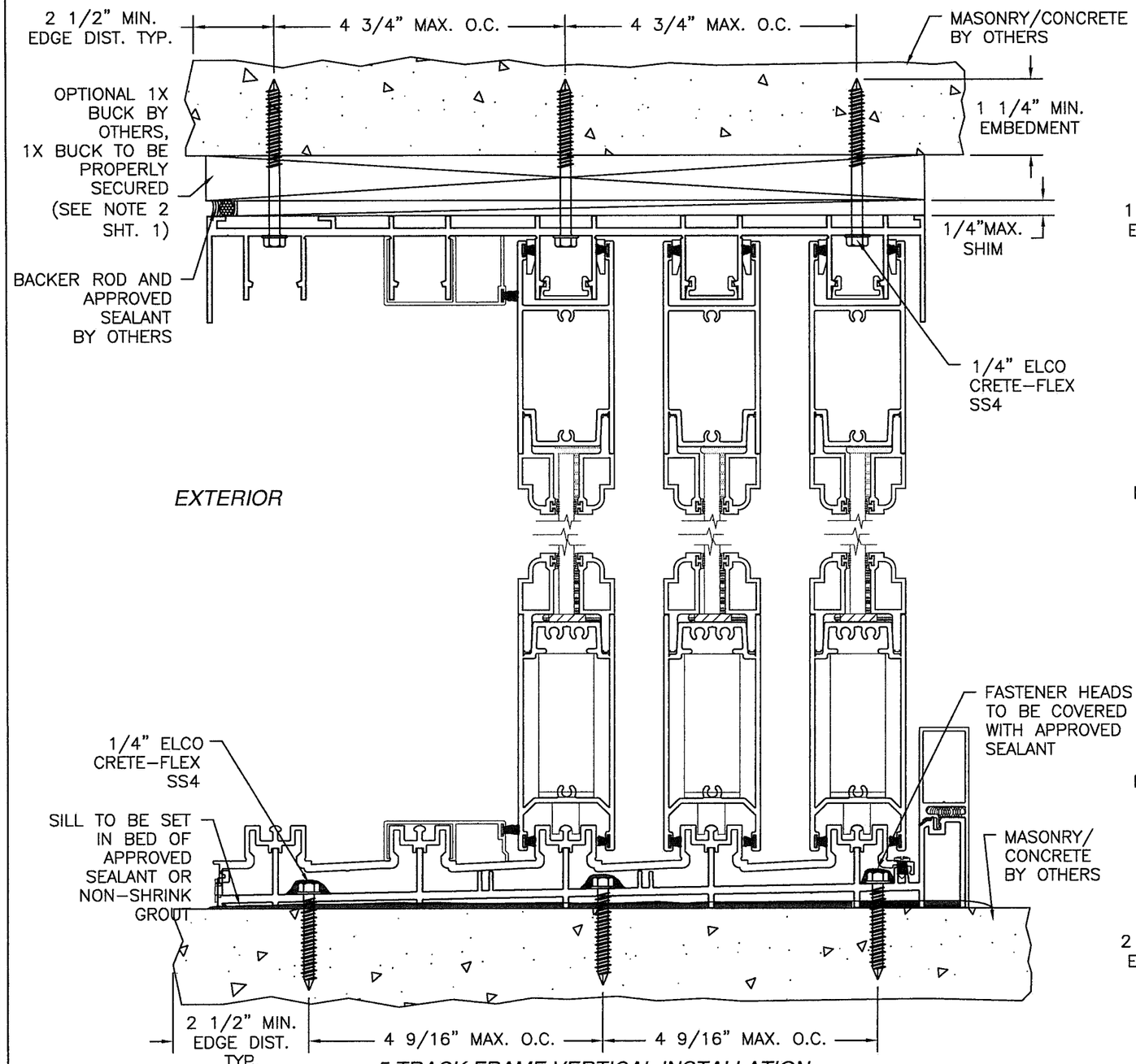

5 TRACK FRAME VERTICAL INSTALLATION

MASONRY/CONCRETE INSTALLATION

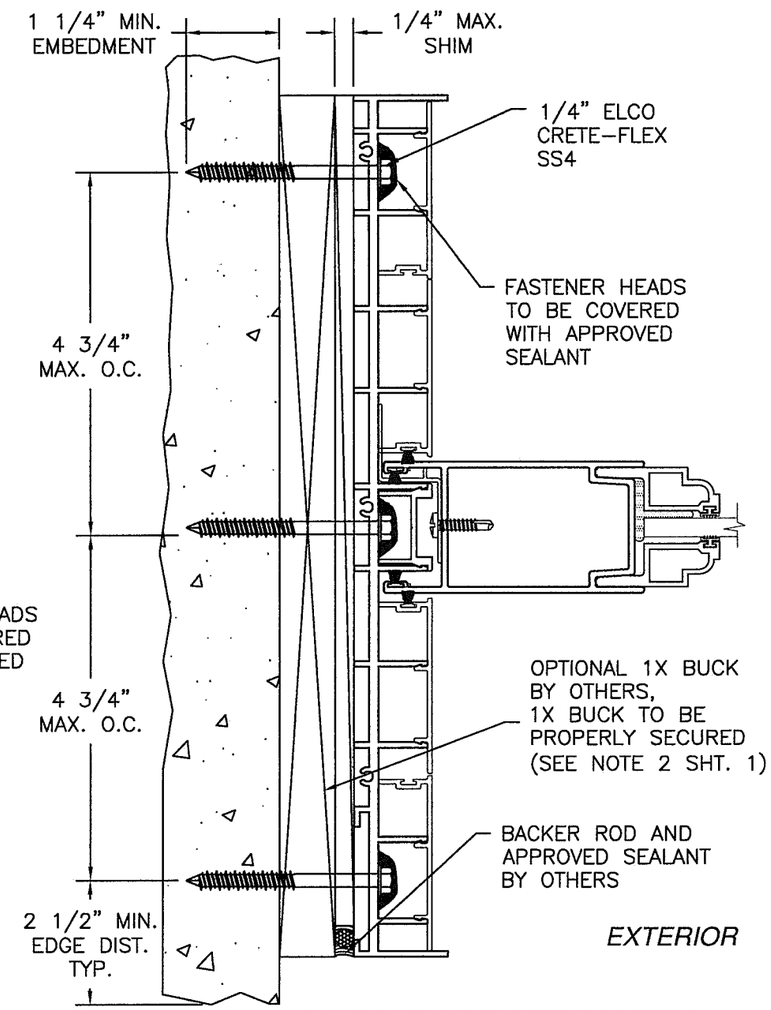

5 TRACK FRAME JAMB INSTALLATION

1X BUCK TO MASONRY/CONCRETE INSTALLATION

NOTES:

1. CONCRETE SUBSTRATE INSTALLATION FOR 5 TRACK SHOWN. SEE SHEET 13 FOR O.C. ANCHOR SEPARATION.
2. 5 TRACK WITH 3" SILL RISER SHOWN. 2 TRACK, 3 TRACK & 4 TRACK ARE SIMILAR. ALL APPLICABLE SILL RISERS MAYBE USED. SEE D.P. TABLES SHEETS 9 & 10.

PRODUCT REVISED
as complying with the Florida Building Code
NOA-No. 20-0814.04
Expiration Date 06/23/2026
By Ishaq I. Chanda
Miami-Dade Product Control

Revision: NO CHANGES THIS SHEET.

PREPARED BY A. LYNN MILLER
1070 TECHNOLOGY DRIVE
N. VENICE, FL 34275
(941) 480-1600
REGISTRATION #29296

WINDOOR® INCORPORATED

WINDOOR INCORPORATED
104 TRIPLE DIAMOND BLVD.
NORTH VENICE, FL 34275
(833) 554-5432

Series	Sheet	DWG No.	Drawn By	Date	Rev.
SGD8100A	26 OF 35	8100-NI-NOA	ERIN KOSS	08/07/20	

Desc.: INSTALL. DETAILS - MASONRY 5T

Title: ALUMINUM SLIDING GLASS DOOR (NON-IMPACT)

ANTHONY LYNN MILLER
LICENSE
No. 58705
STATE OF FLORIDA
PROFESSIONAL ENGINEER
8/7/20

A. LYNN MILLER, P.E.
P.E.# 58705

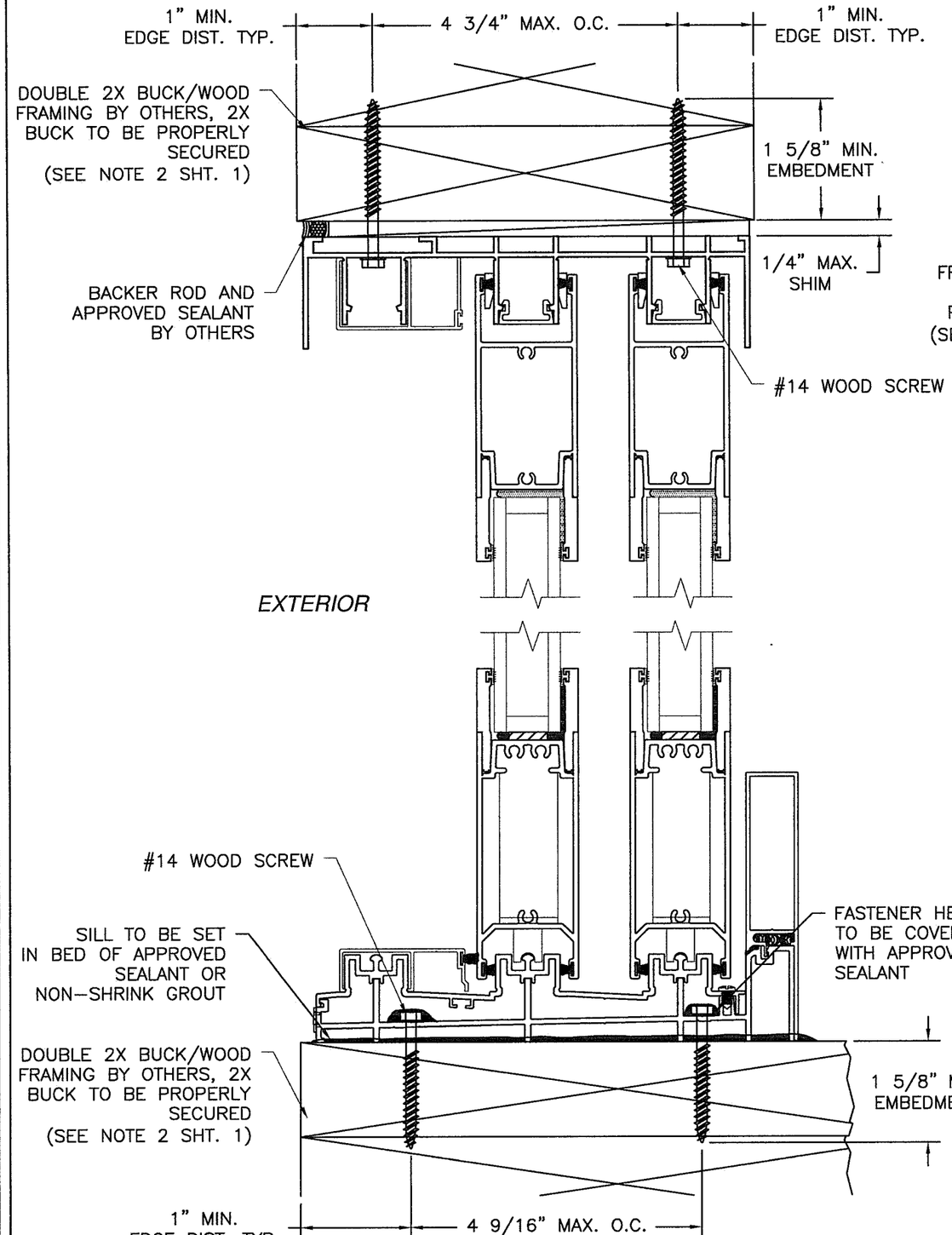

3 TRACK FRAME VERTICAL INSTALLATION

2X BUCK/WOOD FRAME INSTALLATION

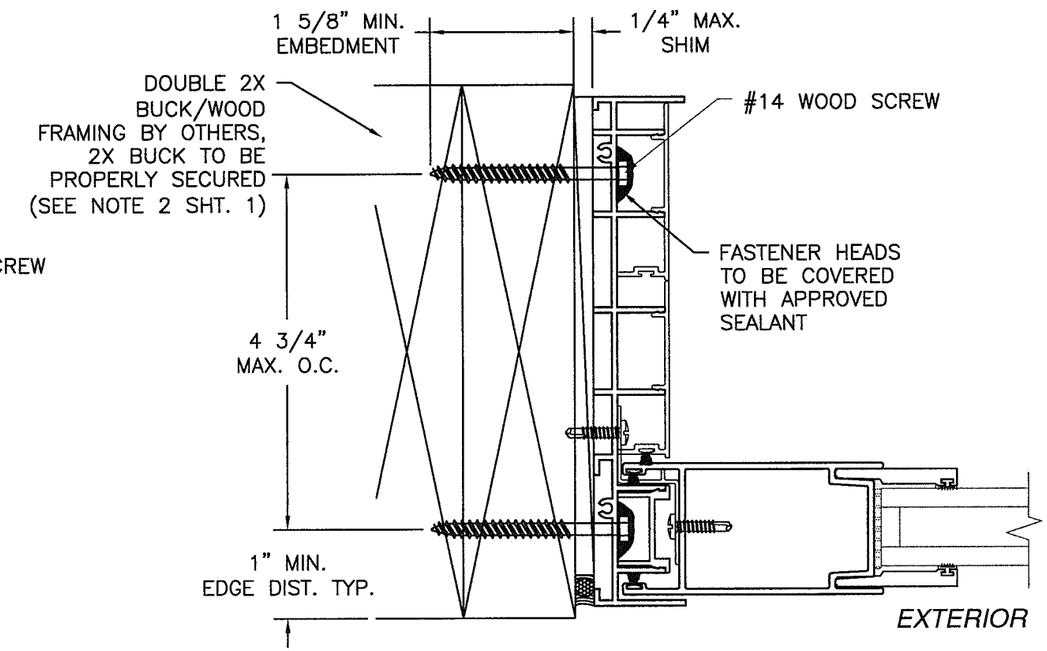

3 TRACK FRAME JAMB INSTALLATION

2X BUCK/WOOD FRAME INSTALLATION.,

NOTES:

1. 2X BUCK/WOOD FRAME SUBSTRATE INSTALLATION FOR 3 TRACK SHOWN. ANCHORAGE SIMILAR FOR 2 TRACK AND 4 TRACK SYSTEMS. SEE SHEET 13 FOR O.C. ANCHOR SEPARATION.
2. 3 TRACK WITH 4-1/4" SILL RISER SHOWN. 3 TRACK, 4 TRACK & 5 TRACK ARE SIMILAR. ALL APPLICABLE SILL RISERS MAYBE USED. SEE D.P. TABLES SHEETS 9 & 10.

PRODUCT REVISED
as complying with the Florida Building Code
NOA-No. 20-0814.04
Expiration Date 06/23/2026
By Ishaq I. Chanda
Miami-Dade Product Control

Revision: NO CHANGES THIS SHEET.

PREPARED BY A. LYNN MILLER
1070 TECHNOLOGY DRIVE
N. VENICE, FL 34275
(941) 480-1600
REGISTRATION #29296

WINDOOR® INCORPORATED
WINDOOR INCORPORATED
104 TRIPLE DIAMOND BLVD.
NORTH VENICE, FL 34275
(833) 554-5432

Title	Desc.	Series	Sheet	DWG No.	Drawn By	Date	Rev.
ALUMINUM SLIDING GLASS DOOR (NON-IMPACT)	INSTALLATION DETAILS - WOOD	SGD8100A	27 OF 35	8100-NI-NOA	ERIN KOSS	08/07/20	

ANTHONY LYNN MILLER
LICENSE
No. 58705
STATE OF FLORIDA
PROFESSIONAL ENGINEER
8/7/20

A. LYNN MILLER, P.E.
P.E.# 58705

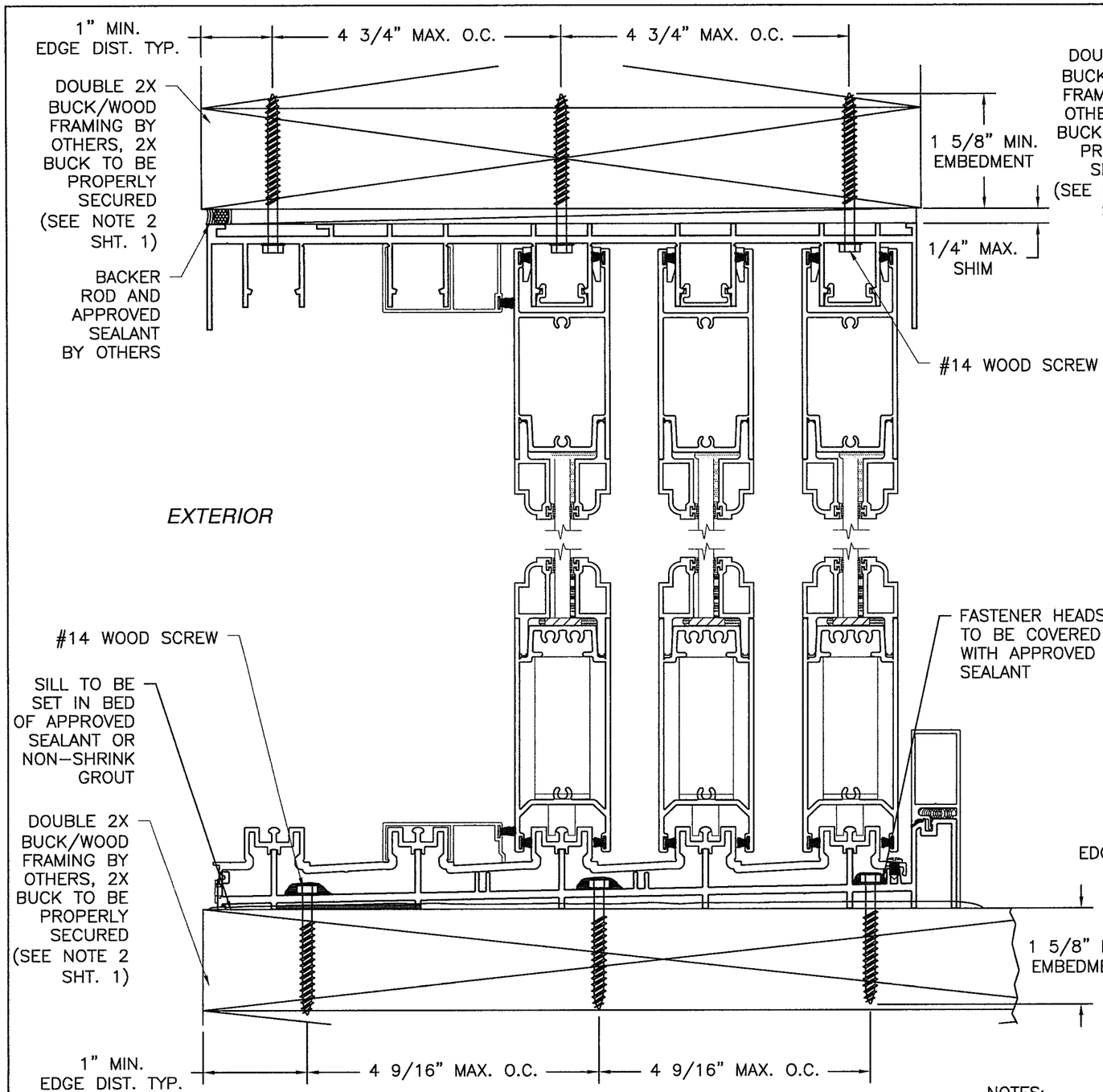

5 TRACK FRAME VERTICAL INSTALLATION

2X BUCK/WOOD FRAME INSTALLATION

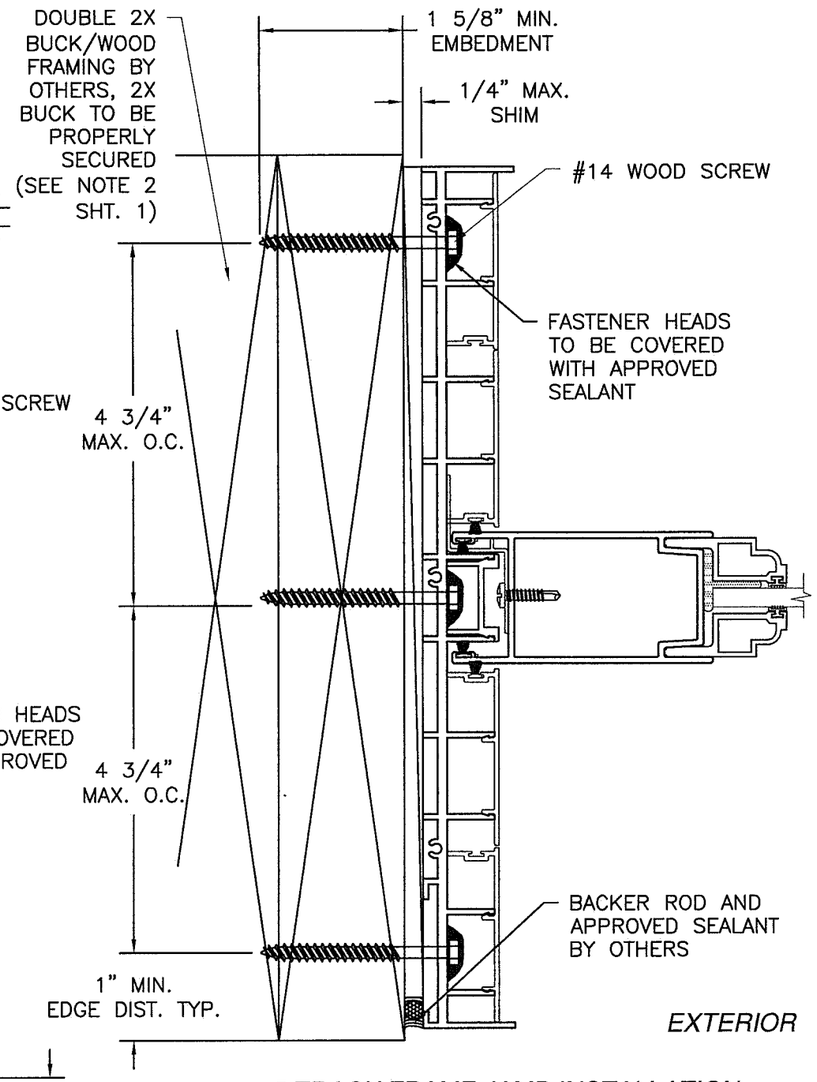

5 TRACK FRAME JAMB INSTALLATION

2X BUCK/WOOD FRAME INSTALLATION,

NOTES:

1. 2X BUCK/WOOD FRAME SUBSTRATE INSTALLATION FOR 5 TRACK SHOWN. SEE SHEET 13 FOR O.C. ANCHOR SEPARATION.
2. 5 TRACK WITH 3" SILL RISER SHOWN. 2 TRACK, 3 TRACK & 4 TRACK ARE SIMILAR. ALL APPLICABLE SILL RISERS MAYBE USED. SEE D.P. TABLES SHEETS 9 & 10.

PRODUCT REVISED
as complying with the Florida Building Code
NOA-No. 20-0814.04
Expiration Date 06/23/2026
By Ishaq I. Chanda
Miami-Dade Product Control

Revision: NO CHANGES THIS SHEET.

PREPARED BY A. LYNN MILLER
1070 TECHNOLOGY DRIVE
N. VENICE, FL 34275
(941) 480-1600
REGISTRATION #29296

WINDOOR® INCORPORATED

WINDOOR INCORPORATED
104 TRIPLE DIAMOND BLVD.
NORTH VENICE, FL 34275
(833) 554-5432

Series	Desc.	Sheet	DWG No.	Drawn By	Date	Rev.
SGD8100A	INSTALL. DETAILS - WOOD 5T	28 OF 35	8100-NI-NOA	ERIN KOSS	08/07/20	

Title: ALUMINUM SLIDING GLASS DOOR (NON-IMPACT)

ANTHONY LYNN MILLER
LICENSE
No. 58705
STATE OF FLORIDA
PROFESSIONAL ENGINEER
8/7/20

A. LYNN MILLER, P.E.
P.E.# 58705

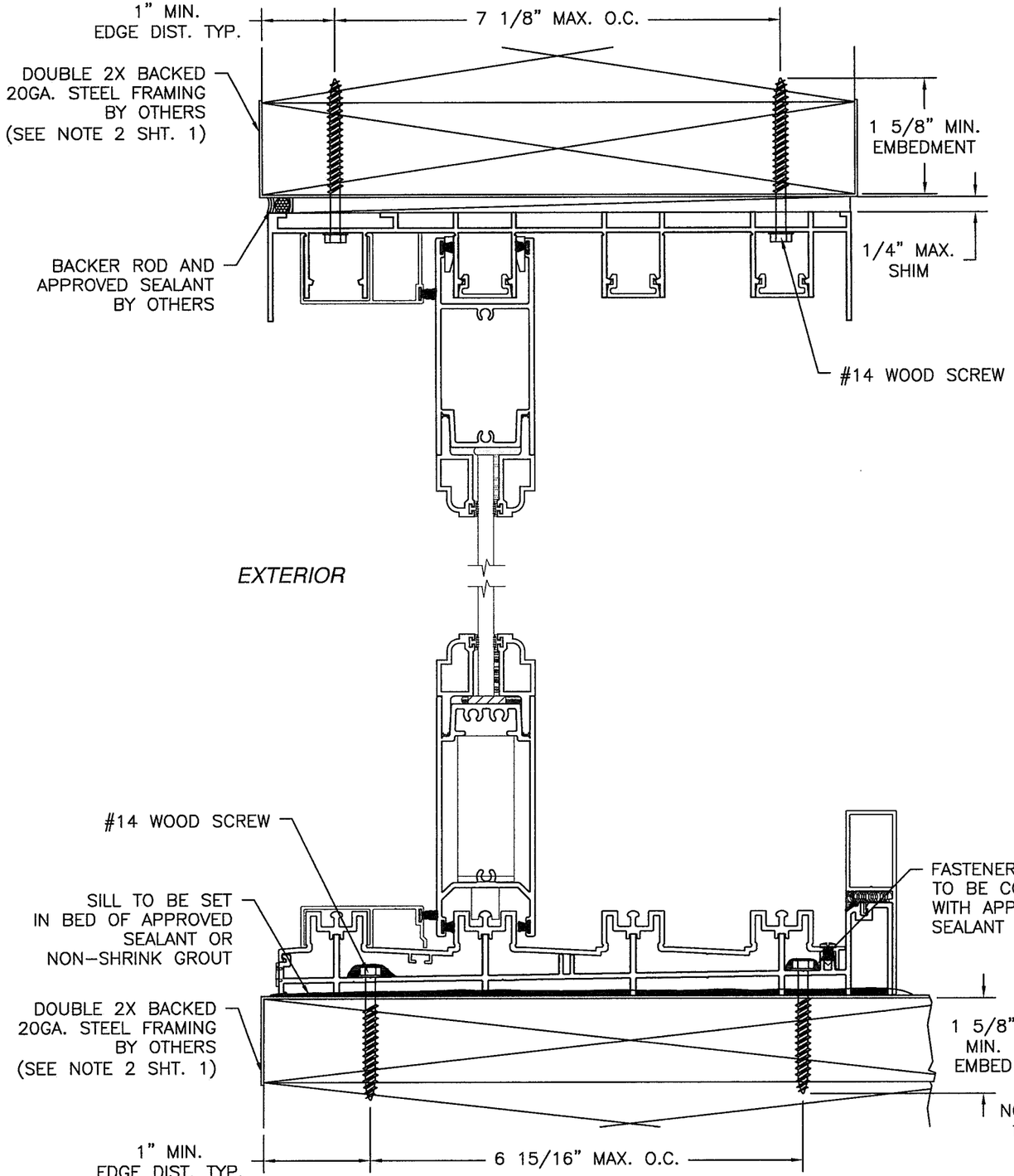

4 TRACK FRAME VERTICAL INSTALLATION

WOOD BACKED 20 GA. STEEL STUD INSTALLATION

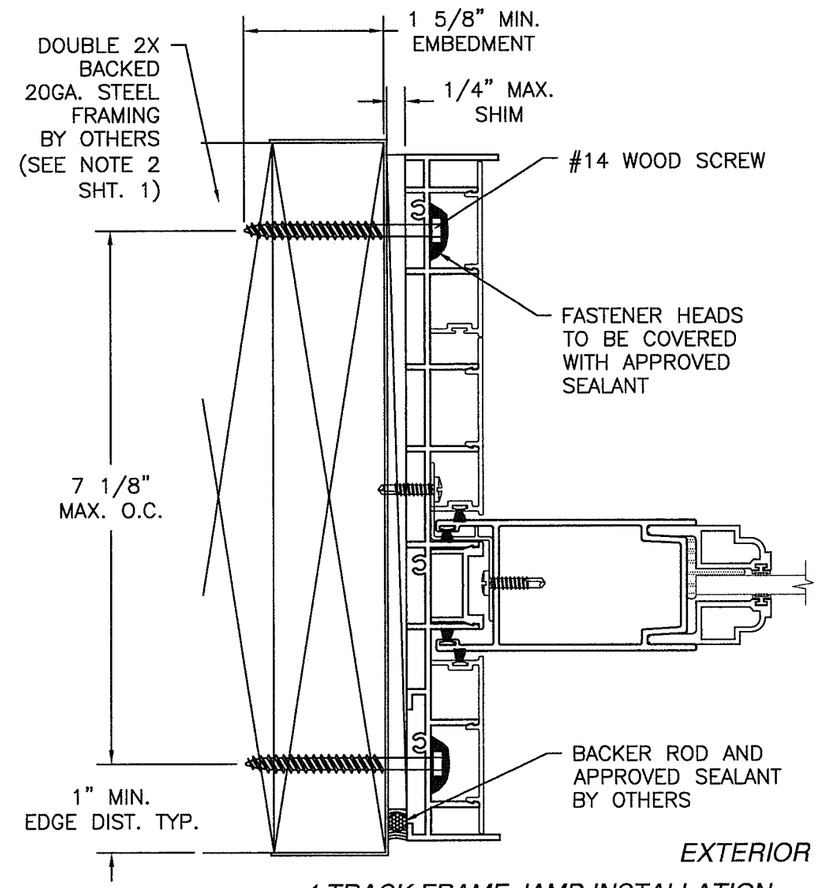

4 TRACK FRAME JAMB INSTALLATION

WOOD BACKED 20 GA. STEEL STUD INSTALLATION.

NOTES:

1. WOOD BACKED 20 GA. STEEL STUD SUBSTRATE INSTALLATION FOR 4 TRACK SHOWN. ANCHORAGE SIMILAR FOR 2 TRACK AND 3 TRACK SYSTEMS. SEE SHEET 13 FOR O.C. ANCHOR SEPARATION.
2. 4 TRACK WITH 3" SILL RISER SHOWN. 2 TRACK, 3 TRACK & 5 TRACK ARE SIMILAR. ALL APPLICABLE SILL RISERS MAYBE USED. SEE D.P. TABLES SHEETS 9 & 10.

PRODUCT REVISED
as complying with the Florida Building Code
NOA-No. 20-0814.04
Expiration Date 06/23/2026
By Ishaq I. Chanda
Miami-Dade Product Control

Revision: NO CHANGES THIS SHEET.

PREPARED BY A. LYNN MILLER
1070 TECHNOLOGY DRIVE
N. VENICE, FL 34275
(941) 480-1600
REGISTRATION #29296

Rev.	Date	Drawn By	DWG No.	Sheet	Series
	08/07/20	ERIN KOSS	8100-NI-NOA	29 OF 35	SGD8100A

Desc.: INSTALLATION DETAILS - STEEL

Title: ALUMINUM SLIDING GLASS DOOR (NON-IMPACT)

WINDOOR® INCORPORATED
WINDOOR INCORPORATED
104 TRIPLE DIAMOND BLVD.
NORTH VENICE, FL 34275
(833) 554-5432

ANTHONY LYNN MILLER
LICENSE
No. 58705
STATE OF FLORIDA
PROFESSIONAL ENGINEER

A. LYNN MILLER, P.E.
P.E.# 58705

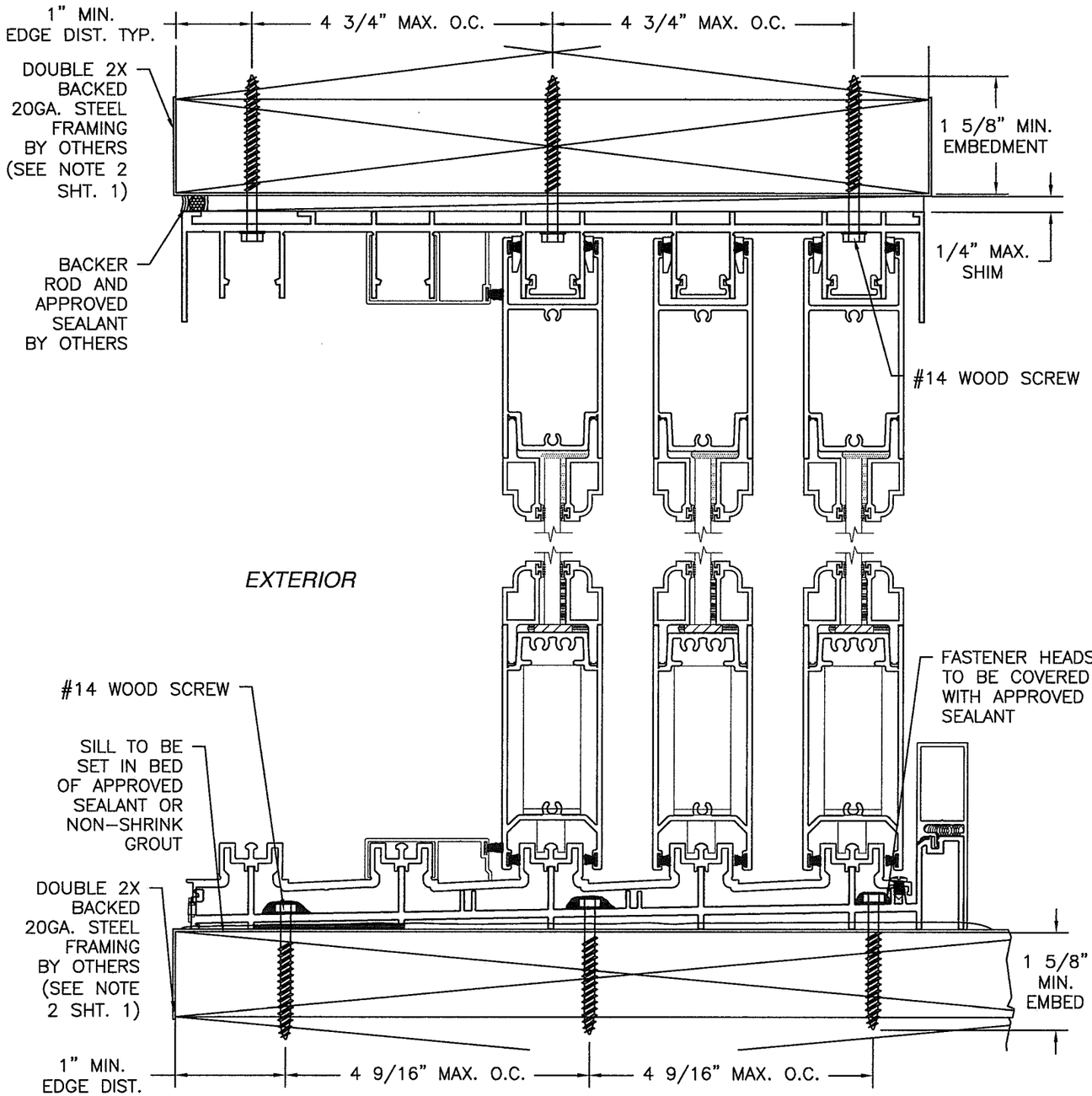

5 TRACK FRAME VERTICAL INSTALLATION

WOOD BACKED 20 GA. STEEL STUD INSTALLATION

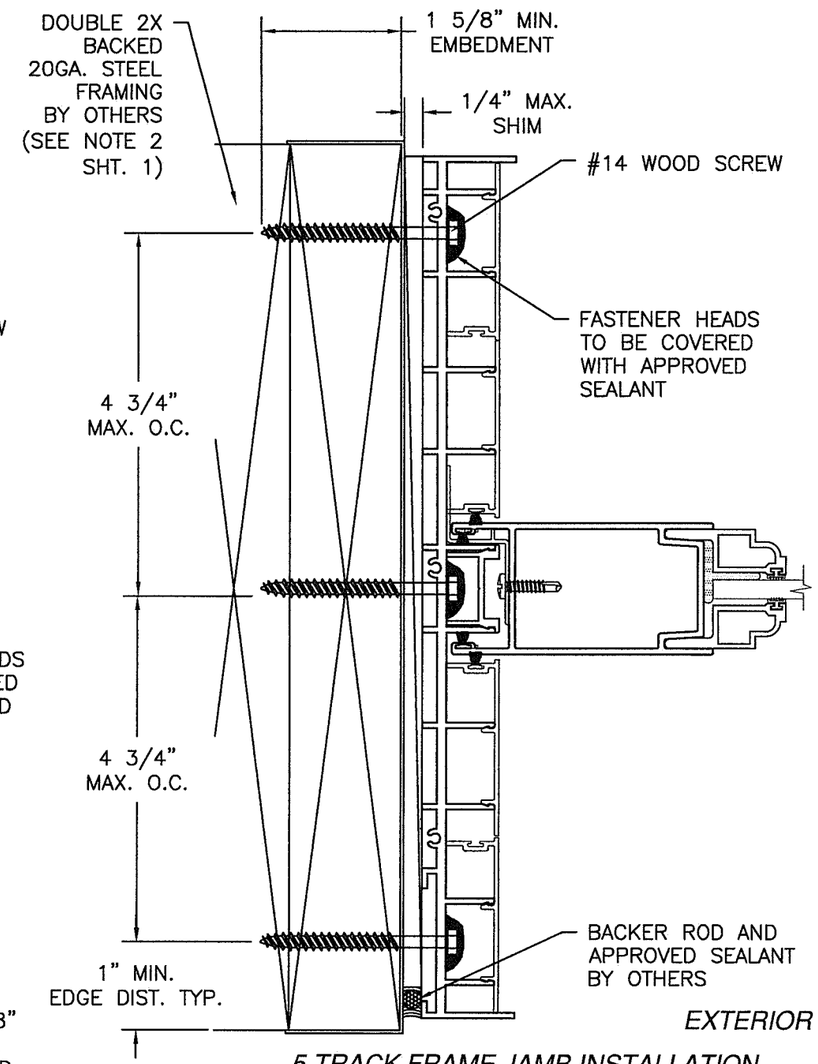

5 TRACK FRAME JAMB INSTALLATION

WOOD BACKED 20 GA. STEEL STUD INSTALLATION

NOTES:

1. WOOD BACKED 20 GA. STEEL STUD SUBSTRATE INSTALLATION FOR 5 TRACK SHOWN. SEE SHEET 13 FOR O.C. ANCHOR SEPARATION.
2. 5 TRACK WITH 3" SILL RISER SHOWN. 2 TRACK, 3 TRACK & 4 TRACK ARE SIMILAR. ALL APPLICABLE SILL RISERS MAYBE USED. SEE D.P. TABLES SHEETS 9 & 10.

PRODUCT REVISED
as complying with the Florida Building Code
NOA-No. 20-0814.04
Expiration Date 06/23/2026
By Ishaq I. Chanda
Miami-Dade Product Control

Revision: NO CHANGES THIS SHEET.

PREPARED BY A. LYNN MILLER
1070 TECHNOLOGY DRIVE
N. VENICE, FL 34275
(941) 480-1600
REGISTRATION #29296

WINDOOR® INCORPORATED
WINDOOR INCORPORATED
104 TRIPLE DIAMOND BLVD.
NORTH VENICE, FL 34275
(833) 554-5432

Title	Desc.	Series	Sheet	DWG No.	Drawn By	Date	Rev.
ALUMINUM SLIDING GLASS DOOR (NON-IMPACT)	INSTALL. DETAILS - STEEL 5T	SGD8100A	30 OF 35	8100-NI-NOA	ERIN KOSS	08/07/20	

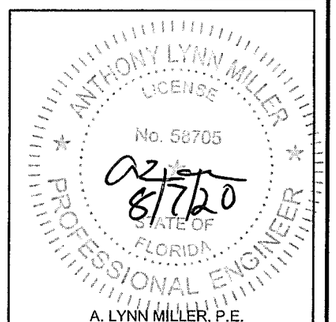

A. LYNN MILLER, P.E.
P.E.# 58705

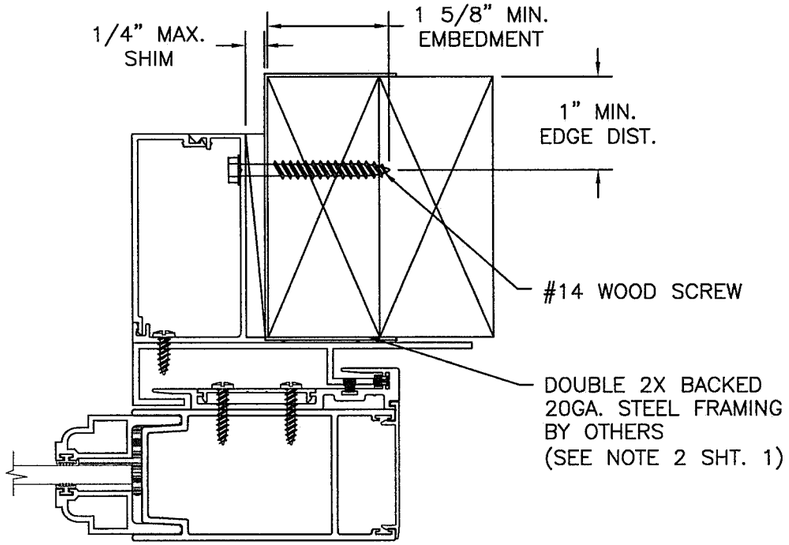

POCKET HOOK STRIP

WOOD BACKED 20 GA. STEEL STUD INSTALLATION

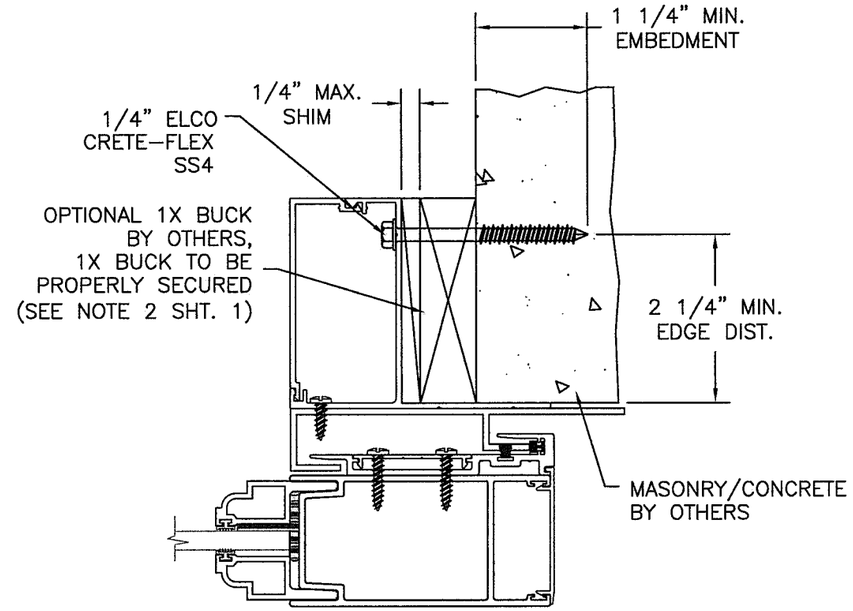

POCKET HOOK STRIP

MASONRY/CONCRETE INSTALLATION

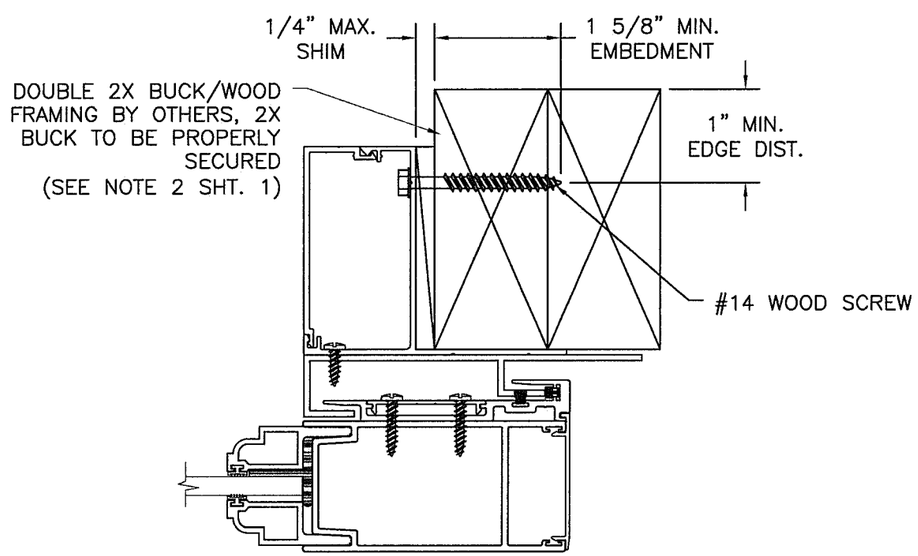

POCKET HOOK STRIP

2X BUCK/WOOD FRAME INSTALLATION

EXTERIOR

PRODUCT REVISED
as complying with the Florida Building Code
NOA-No. 20-0814.04
Expiration Date 06/23/2026
By Ishaq I. Chanda
Miami-Dade Product Control

Revision: NO CHANGES THIS SHEET.

PREPARED BY A. LYNN MILLER
1070 TECHNOLOGY DRIVE
N. VENICE, FL 34275
(941) 480-1600
REGISTRATION #29296

Rev.	Date	Drawn By	DWG No.	Sheet	Series
	08/07/20	ERIN KOSS	8100-NI-NOA	31 OF 35	SGD8100A

Title: ALUMINUM SLIDING GLASS DOOR (NON-IMPACT)

Desc.: INSTALLATION DETAILS - HOOKSTRIP

WINDOOR® INCORPORATED
WINDOOR INCORPORATED
104 TRIPLE DIAMOND BLVD.
NORTH VENICE, FL 34275
(833) 554-5432

ANTHONY LYNN MILLER
LICENSE
No. 58705
STATE OF FLORIDA
PROFESSIONAL ENGINEER

8/7/20

A. LYNN MILLER, P.E.
P.E.# 58705

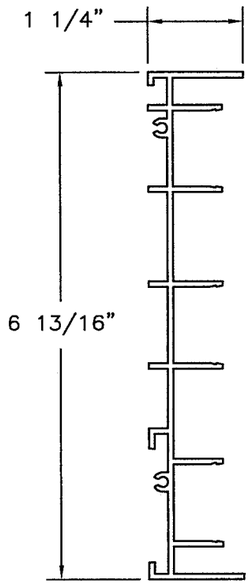

(8) 3 TRACK FRAME JAMB
ALUMINUM 6063-T6 .075" THICK

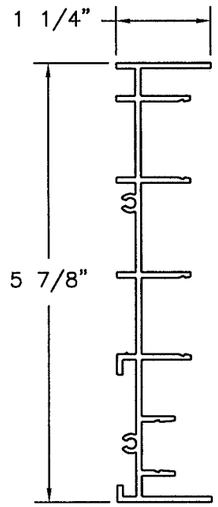

(2) 2 TRACK WS FRAME JAMB
ALUMINUM 6063-T6 .075" THICK

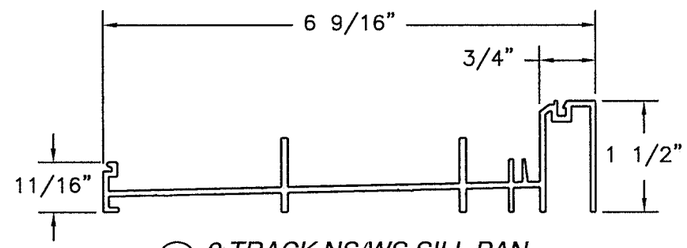

(3) 2 TRACK NS/WS SILL PAN
ALUMINUM 6063-T6 .075" THICK

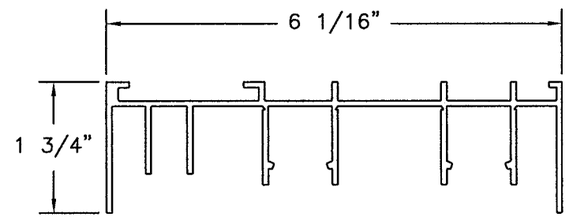

(1) 2 TRACK WS FRAME HEAD
ALUMINUM 6063-T6 .075" THICK

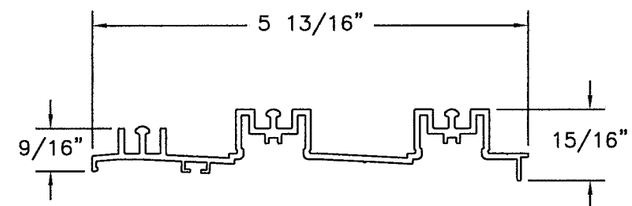

(4) 2 TRACK WS SILL INSERT
ALUMINUM 6063-T6 .075" THICK

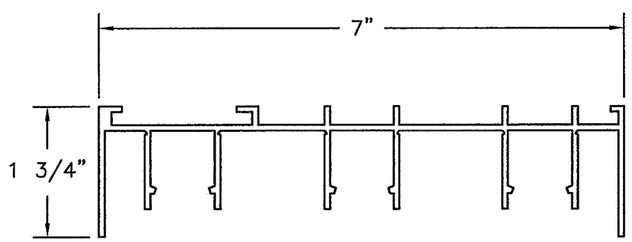

(7) 3 TRACK FRAME HEAD
ALUMINUM 6063-T6 .075" THICK

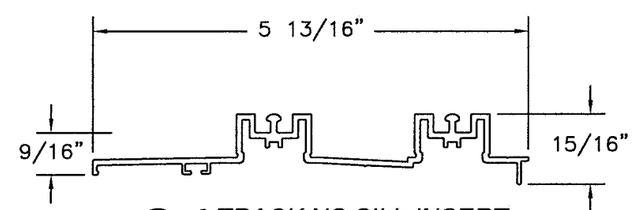

(61) 2 TRACK NS SILL INSERT
ALUMINUM 6063-T6 .075" THICK

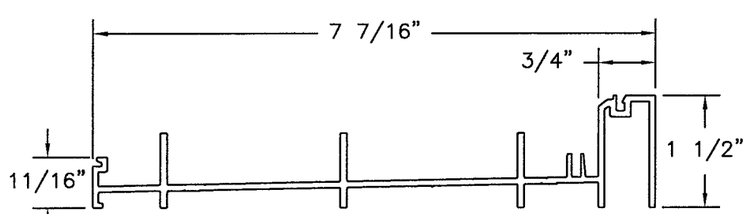

(9) 3 TRACK SILL PAN
ALUMINUM 6063-T6 .075" THICK

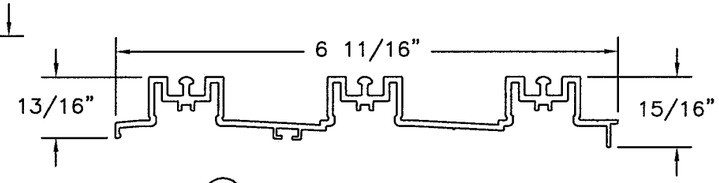

(10) 3 TRACK SILL INSERT
ALUMINUM 6063-T6 .075" THICK

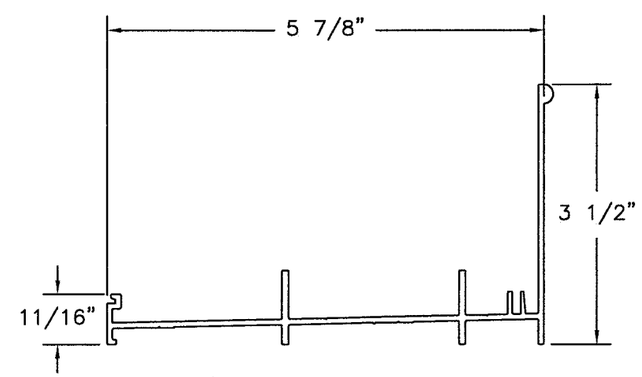

(70) 2 TRACK WS RETRO SILL PAN
ALUMINUM 6063-T6 .075" THICK

PRODUCT REVISED
as complying with the Florida Building Code
NOA-No. 20-0814.04
Expiration Date 06/23/2026
By Ishaq I. Chanda
Miami-Dade Product Control

Revision: NO CHANGES THIS SHEET.

PREPARED BY A. LYNN MILLER
1070 TECHNOLOGY DRIVE
N. VENICE, FL 34275
(941) 480-1600
REGISTRATION #29296

Title	Date	Rev.
ALUMINUM SLIDING GLASS DOOR (NON-IMPACT)	08/07/20	

Desc.	Drawn By	DWG No.	Sheet	Series
EXTRUSIONS	ERIN KOSS	8100-NI-NOA	32 OF 35	SGD8100A

WINDOOR® INCORPORATED
WINDOOR INCORPORATED
104 TRIPLE DIAMOND BLVD.
NORTH VENICE, FL 34275
(833) 554-5432

ANTHONY LYNN MILLER
LICENSE
No. 58705
8/7/20
STATE OF FLORIDA
PROFESSIONAL ENGINEER

A. LYNN MILLER, P.E.
P.E.# 58705

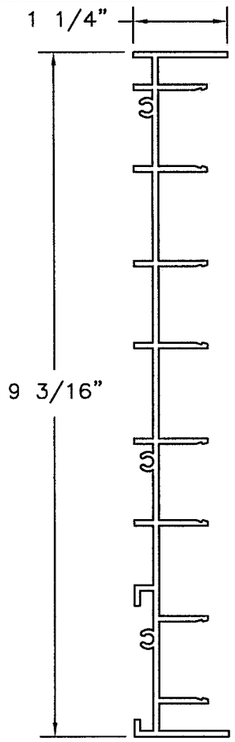

(12) 4 TRACK FRAME JAMB
ALUMINUM 6063-T6 .075" THICK

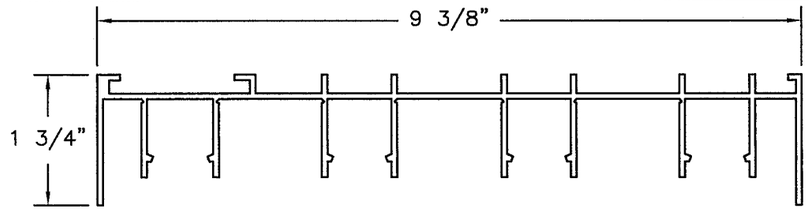

(11) 4 TRACK FRAME HEAD
ALUMINUM 6063-T6 .075" THICK

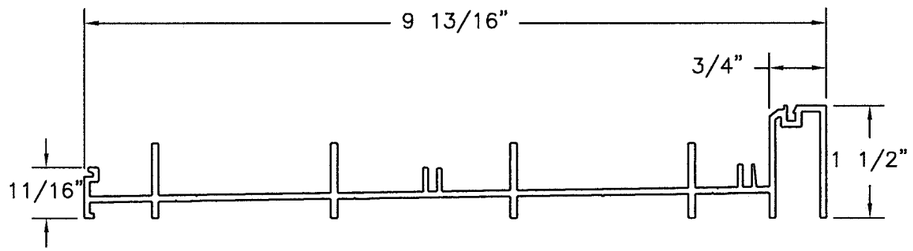

(13) 4 TRACK SILL PAN
ALUMINUM 6063-T6 .075" THICK

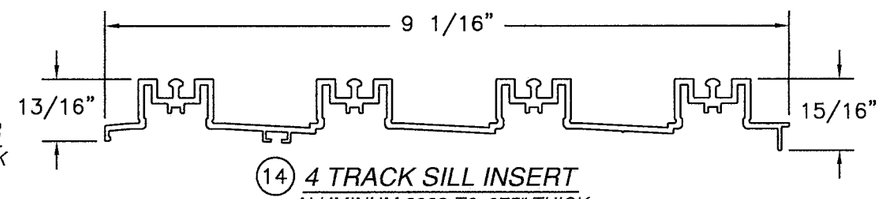

(14) 4 TRACK SILL INSERT
ALUMINUM 6063-T6 .075" THICK

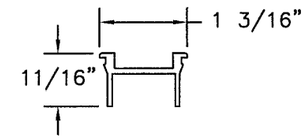

(32) PANEL STILE JAMB INSERT
ALUMINUM 6063-T6 .075" THICK

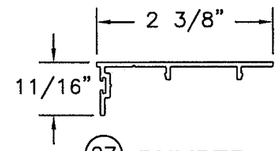

(27) BUMPER JAMB INSERT
ALUMINUM 6063-T6 .060" THICK

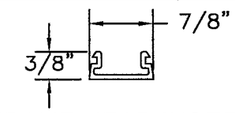

(15) FRAME HEAD INSERT
ALUMINUM 6063-T6 .060" THICK

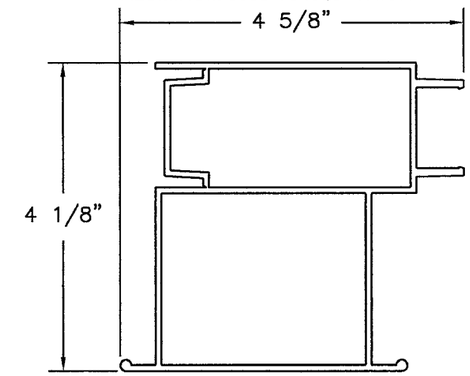

(23) FEMALE BUTT STILE EXT. OFFSET
ALUMINUM 6063-T6 .080" THICK

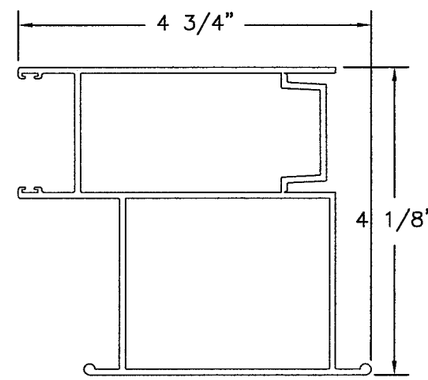

(24) MALE BUTT STILE EXT. OFFSET
ALUMINUM 6063-T6 .080" THICK

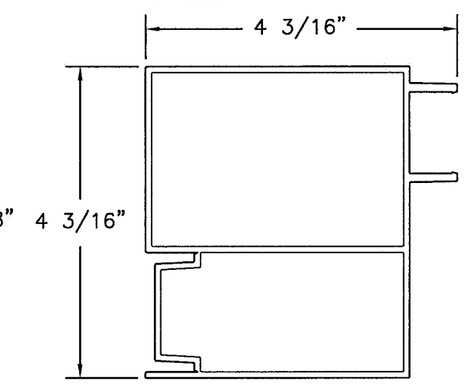

(25) FEMALE BUTT STILE INT. OFFSET
ALUMINUM 6063-T6 .080" THICK

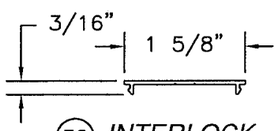

(30) INTERLOCK SNAP COVER
ALUMINUM 6063-T6 .051" THICK

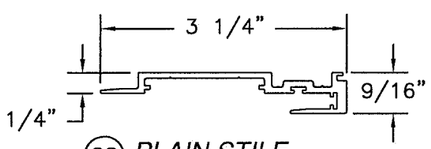

(28) PLAIN STILE INTERLOCK
ALUMINUM 6063-T6 .075" THICK

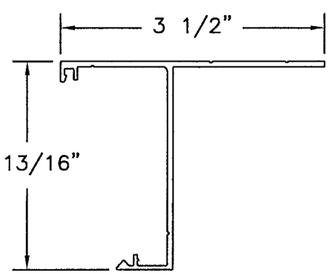

(40) HOOK STRIP WALL MOUNT
ALUMINUM 6063-T6 .075" THICK

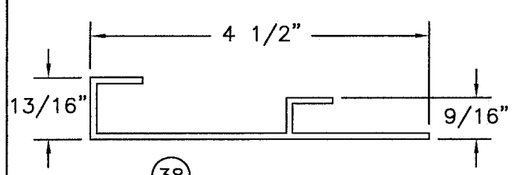

(38) HOOK STRIP
ALUMINUM 6063-T6 .080" THICK

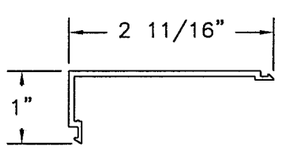

(39) HOOK STRIP WALL COVER
ALUMINUM 6063-T6 .075" THICK

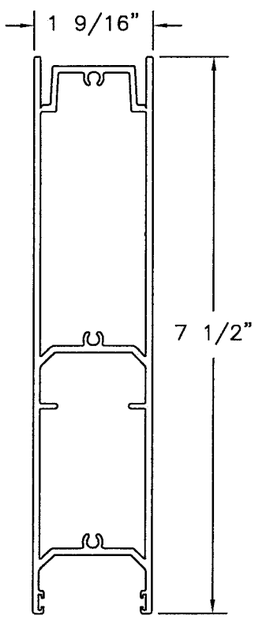

(19) TALL BOTTOM RAIL
ALUMINUM 6063-T6 .080" THICK

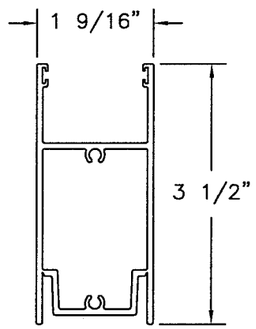

(17) TOP RAIL
ALUMINUM 6063-T6 .080" THICK

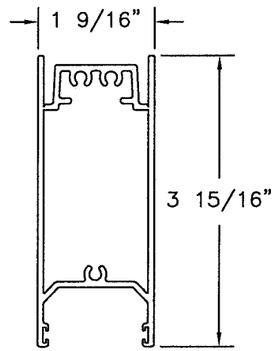

(18) BOTTOM RAIL
ALUMINUM 6063-T6 .080" THICK

PRODUCT REVISED
as complying with the Florida Building Code
NOA-No. 20-0814.04
Expiration Date 06/23/2026
By Ishwar I. Chanda
Miami-Dade Product Control

Revision: NO CHANGES THIS SHEET.

PREPARED BY A. LYNN MILLER
1070 TECHNOLOGY DRIVE
N. VENICE, FL 34275
(941) 480-1600
REGISTRATION #29296

WINDOOR® INCORPORATED
WINDOOR INCORPORATED
104 TRIPLE DIAMOND BLVD.
NORTH VENICE, FL 34275
(833) 554-5432

Title	Date	Drawn By	DWG No.	Sheet	Rev.
ALUMINUM SLIDING GLASS DOOR (NON-IMPACT)	08/07/20	ERIN KOSS	8100-NI-NOA	33 OF 35	
Desc. EXTRUSIONS					
Series SGD8100A					

ANTHONY LYNN MILLER
LICENSE
No. 58705
STATE OF FLORIDA
PROFESSIONAL ENGINEER
8/7/20

A. LYNN MILLER, P.E.
P.E.# 58705

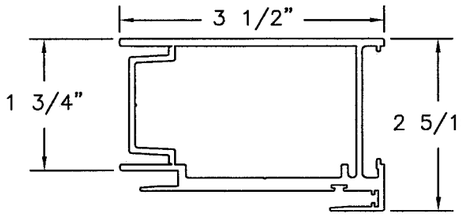

(22) INTERLOCK STILE
ALUMINUM 6063-T6 .080" THICK

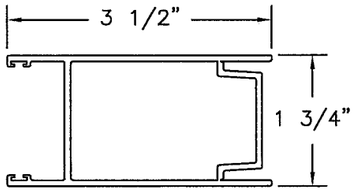

(21) LOCK STILE
ALUMINUM 6063-T6 .080" THICK

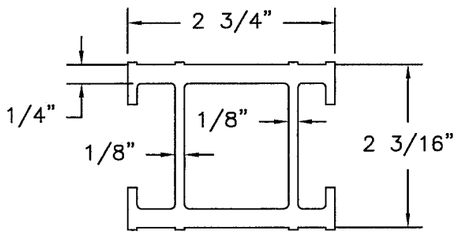

(47) FEMALE BUTT STILE REINFORCING BAR
ALUMINUM 6005-T5 .125" THICK

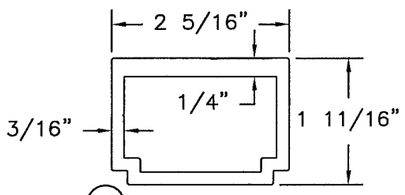

(46) INTERLOCK REINFORCING BAR
ALUMINUM 6005-T5 .168" THICK

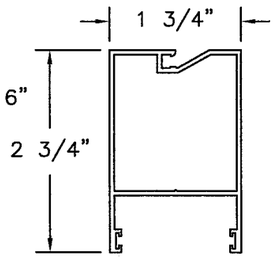

(73) MT SCREEN STILE
ALUMINUM 6063-T6 .060" THICK

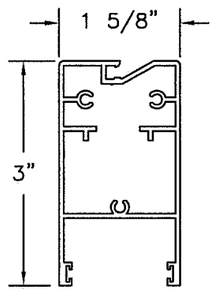

(72) MT SCREEN TOP/BOTTOM RAIL
ALUMINUM 6063-T6 .060" THICK

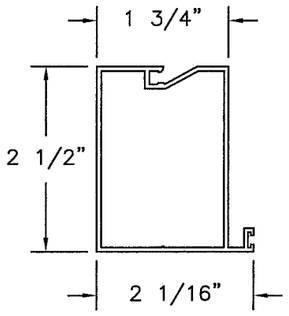

(74) MT SCREEN STILE W/SEAL
ALUMINUM 6063-T6 .060" THICK

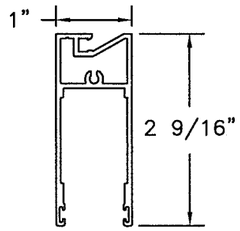

(76) BOX SCREEN TOP/BOTTOM RAIL
ALUMINUM 6063-T6 .062" THICK

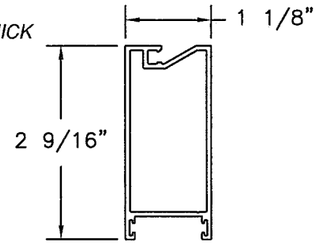

(73) BOX SCREEN STILE
ALUMINUM 6063-T6 .062" THICK

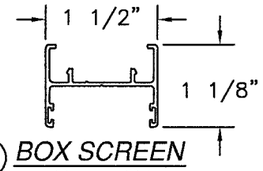

(79) BOX SCREEN ASTRAGAL
ALUMINUM 6063-T6 .050" THICK

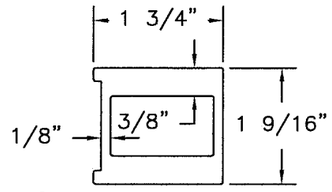

(45) 6000 BUTT STILE REINFORCING BAR
ALUMINUM 6061-T6 .375" THICK

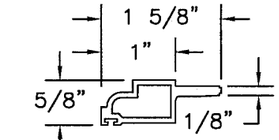

(41) 1/4" HORIZONTAL GLASS STOP
ALUMINUM 6063-T6 .070" THICK

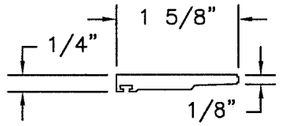

(44) 1" VERTICAL GLASS STOP
ALUMINUM 6063-T6 .20" THICK

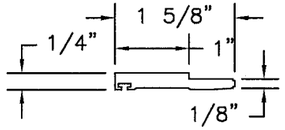

(43) 1" HORIZONTAL GLASS STOP
ALUMINUM 6063-T6 .20" THICK

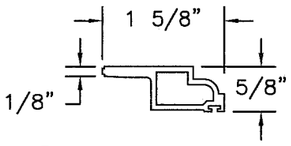

(42) 1/4" VERTICAL GLASS STOP
ALUMINUM 6063-T6 .070" THICK

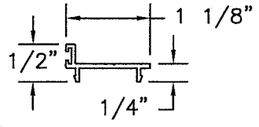

(78) BOX SCREEN SWEEP
ALUMINUM 6063-T6 .060" THICK

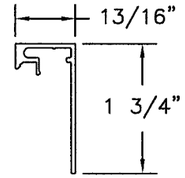

(33) 1 3/4" SILL RISER
ALUMINUM 6063-T6 .060" THICK

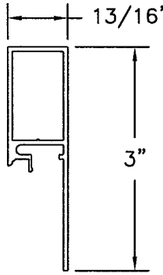

(35) 3" SILL RISER
ALUMINUM 6063-T6 .060" THICK

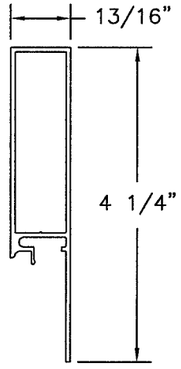

(37) 4 1/4" SILL RISER
ALUMINUM 6063-T6 .060" THICK

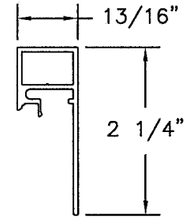

(34) 2 1/4" SILL RISER
ALUMINUM 6063-T6 .060" THICK

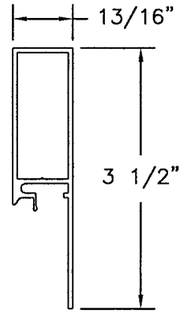

(36) 3 1/2" SILL RISER
ALUMINUM 6063-T6 .060" THICK

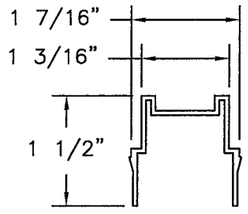

(75) MT SCREEN ASTRAGAL
ALUMINUM 6063-T6 .060" THICK

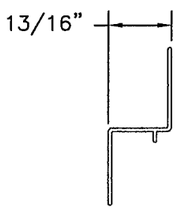

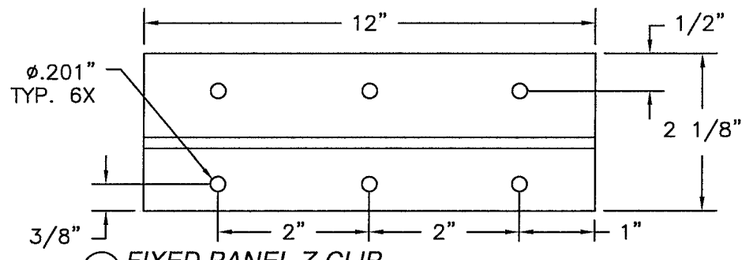

(85) FIXED PANEL Z-CLIP
6063-T6 ALUM. .050" THICK

PRODUCT REVISED
as complying with the Florida Building Code
NOA-No. 20-0814.04
Expiration Date 06/23/2026
By Ishaq I. Chanda
Miami-Dade Product Control

Revision: NO CHANGES THIS SHEET.

PREPARED BY A. LYNN MILLER
1070 TECHNOLOGY DRIVE
N. VENICE, FL 34275
(941) 480-1600
REGISTRATION #29296

WINDOOR INCORPORATED
104 TRIPLE DIAMOND BLVD.
NORTH VENICE, FL 34275
(833) 554-5432

WINDOOR® INCORPORATED

Series	Desc.	Title	Sheet	DWG No.	Drawn By	Date	Rev.
SGD8100A	EXTRUSIONS	ALUMINUM SLIDING GLASS DOOR (NON-IMPACT)	34 OF 35	8100-NI-NOA	ERIN KOSS	08/07/20	

ANTHONY LYNN MILLER
LICENSE
No. 58705
STATE OF FLORIDA
PROFESSIONAL ENGINEER
8/7/20

A. LYNN MILLER, P.E.
P.E.# 58705

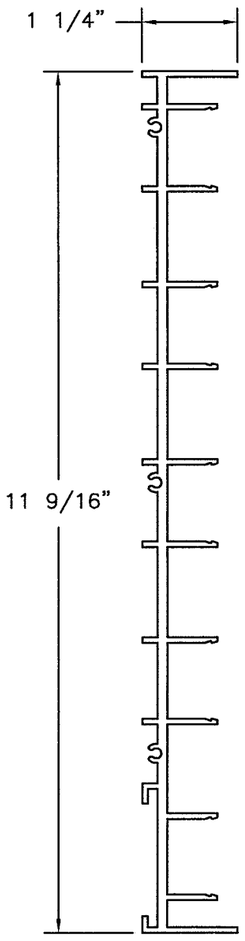

6 5 TRACK FRAME JAMB
ALUMINUM 6063-T6 .075" THICK

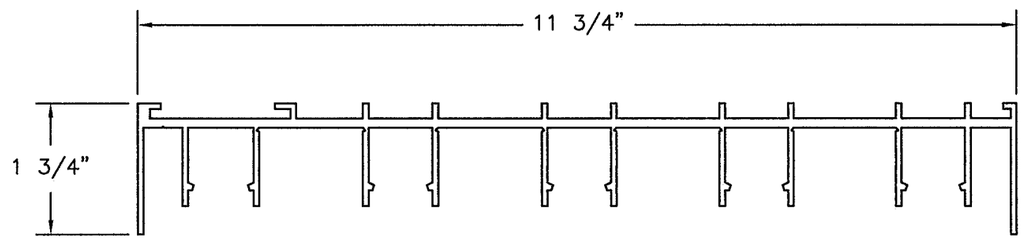

5 5 TRACK FRAME HEAD
ALUMINUM 6063-T6 .075" THICK

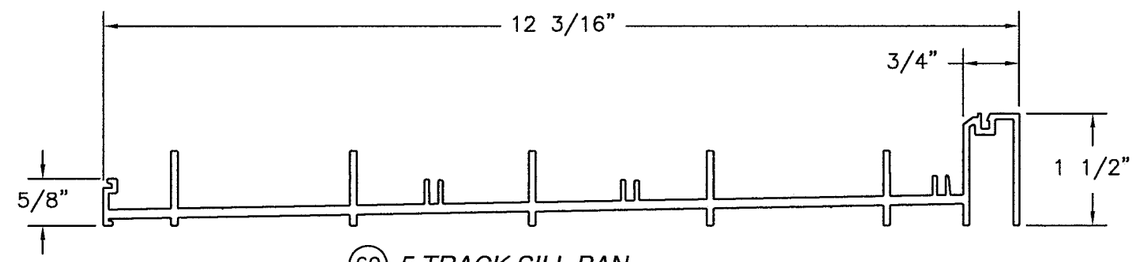

69 5 TRACK SILL PAN
ALUMINUM 6063-T6 .125" THICK

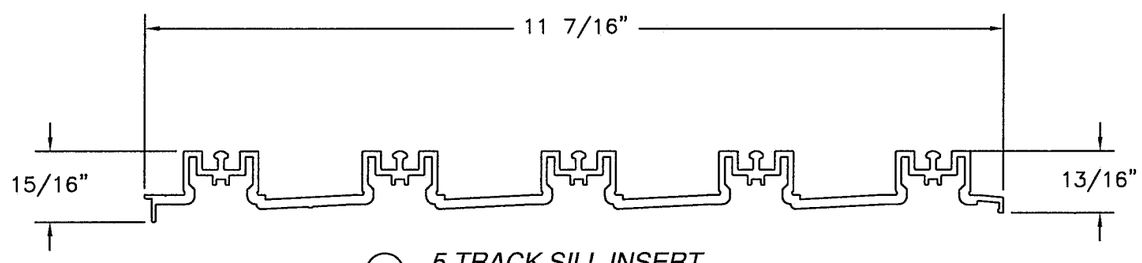

81 5 TRACK SILL INSERT
ALUMINUM 6063-T6 .125" THICK

PRODUCT REVISED
as complying with the Florida Building Code
NOA-No. 20-0814.04
Expiration Date 06/23/2026
By Ishaq I. Chanda
Miami-Dade Product Control

Revision: NO CHANGES THIS SHEET.

PREPARED BY A. LYNN MILLER
1070 TECHNOLOGY DRIVE
N. VENICE, FL 34275
(941) 480-1600
REGISTRATION #29296

WINDOOR® INCORPORATED
WINDOOR INCORPORATED
104 TRIPLE DIAMOND BLVD.
NORTH VENICE, FL 34275
(833) 554-5432

Series	Sheet	DWG No.	Rev.
SGD8100A	35 OF 35	8100-NI-NOA	

Desc.	Drawn By	Date
EXTRUSIONS	ERIN KOSS	08/07/20

Title: ALUMINUM SLIDING GLASS DOOR (NON-IMPACT)

ANTHONY LYNN MILLER
LICENSE
No. 58705
STATE OF FLORIDA
PROFESSIONAL ENGINEER
8/7/20

A. LYNN MILLER, P.E.
P.E.# 58705