MIAMI-DADE COUNTY
PRODUCT CONTROL SECTION
11805 SW 26 Street, Room 208
Miami, Florida 33175-2474
T (786) 315-2590 F (786) 315-2599
www.miamidade.gov/building

DEPARTMENT OF REGULATORY AND ECONOMIC RESOURCES (RER)
BOARD AND CODE ADMINISTRATION DIVISION

NOTICE OF ACCEPTANCE (NOA)

Lawson Industries, Inc.
8501 NW 90 Street
Medley, FL 33166

SCOPE:

This NOA is being issued under the applicable rules and regulations governing the use of construction materials. The documentation submitted has been reviewed and accepted by Miami-Dade County RER - Product Control Section to be used in Miami Dade County and other areas where allowed by the Authority Having Jurisdiction (AHJ).

This NOA shall not be valid after the expiration date stated below. The Miami-Dade County Product Control Section (In Miami-Dade County) and/ or the AHJ (in areas other than Miami-Dade County) reserve the right to have this product or material tested for quality assurance purposes. If this product or material fails to perform in the accepted manner, the manufacturer will incur the expense of such testing and the AHJ may immediately revoke, modify, or suspend the use of such product or material within their jurisdiction. RER reserves the right to revoke this acceptance if it is determined by Miami-Dade County Product Control Section that this product or material fails to meet the requirements of the applicable building code.

This product is approved as described herein, and has been designed to comply with the Florida Building Code, including the High Velocity Hurricane Zone.

DESCRIPTION: Series "SH-7800 (Fin Frame)" Aluminum Single Hung Window – L.M.I.

APPROVAL DOCUMENT: Drawing No. **L7800-0801**, Rev **F** titled "Series-7800 Single Hung Fin Frame Impact Window", sheets 1 through 4 of 4, dated 03/31/08 and last revised on SEP06, 2023, prepared by manufacturer, and signed and sealed by Thomas J. Sotos, P.E., bearing the Miami–Dade County Product Control Revision stamp with the Notice of Acceptance number and expiration date by the Miami–Dade County Product Control Section.

MISSILE IMPACT RATING: Large and Small Missile Impact Resistant

LABELING: Each unit shall bear a permanent label with the manufacturer's name or logo, city, state, series, and following statement: "Miami-Dade County Product Control Approved", unless otherwise noted herein.

RENEWAL of this NOA shall be considered after a renewal application has been filed and there has been no change in the applicable building code negatively affecting the performance of this product.

TERMINATION of this NOA will occur after the expiration date or if there has been a revision or change in the materials, use, and/ or manufacture of the product or process. Misuse of this NOA as an endorsement of any product, for sales, advertising or any other purposes shall automatically terminate this NOA. Failure to comply with any section of this NOA shall be cause for termination and removal of NOA.

ADVERTISEMENT: The NOA number preceded by the words Miami-Dade County, Florida, and followed by the expiration date may be displayed in advertising literature. If any portion of the NOA is displayed, then it shall be done in its entirety.

INSPECTION: A copy of this entire NOA shall be provided to the user by the manufacturer or its distributors and shall be available for inspection at the job site at the request of the Building Official.

This NOA **revises & renews NOA No. 20-0813.08** and consists of this page 1 and evidence pages E-1, E-2, E-3 and E-4, as well as approval document mentioned above.

The submitted documentation was reviewed by **Ishaq I. Chanda, P.E.**

MIAMI-DADE COUNTY APPROVED

Ishaq I. Chanda

Lawson Industries, Inc.

NOTICE OF ACCEPTANCE: EVIDENCE SUBMITTED

1. EVIDENCE SUBMITTED UNDER PREVIOUS NOA's

A. DRAWINGS

1. Manufacturer's die drawings and sections.
(Submitted under NOA No. 08-0527.18)

2. Drawing No **L7800-0801**, titled "Series-7800 Single Hung Fin Frame Impact Window", sheets 1 through 4 of 4, dated 03/31/08, with revision **D** dated 11/01/17, prepared by manufacturer, signed and sealed by Thomas J. Sotos, P.E.
(Submitted under NOA No. 17-1212.18)

B. TESTS

1. Test reports on: 1) Large Missile Impact Test per FBC, TAS 201-94
2) Cyclic Wind Pressure Loading per FBC, TAS 203-94
along with marked-up drawings and installation diagram of an aluminum single hung fin window, prepared by Hurricane Engineering & Testing, Inc., Test Report No. **HETI-08-2083**, dated 03/14/08, signed and sealed by Candido F. Font, P.E.
(Submitted under NOA No. 08-0527.18)

2. Test reports on: 1) Large Missile Impact Test per FBC, TAS 201-94
2) Cyclic Wind Pressure Loading per FBC, TAS 203-94
along with marked-up drawings and installation diagram of an aluminum single hung fin window, prepared by Hurricane Engineering & Testing, Inc., Test Report No. **HETI-08-2084**, dated 03/14/08, signed and sealed by Candido F. Font, P.E.
(Submitted under NOA No. 08-0527.18)

3. Test reports on: 1) Large Missile Impact Test per FBC, TAS 201-94
2) Cyclic Wind Pressure Loading per FBC, TAS 203-94
along with marked-up drawings and installation diagram of an aluminum single hung fin window, prepared by Hurricane Engineering & Testing, Inc., Test Report No. **HETI-08-2015**, dated 01/15/08, signed and sealed by Candido F. Font, P.E.
(Submitted under NOA No. 08-0527.18)

4. Test reports on: 1) Large Missile Impact Test per FBC, TAS 201-94
2) Cyclic Wind Pressure Loading per FBC, TAS 203-94
along with marked-up drawings and installation diagram of an aluminum single hung fin window, prepared by Hurricane Engineering & Testing, Inc., Test Report No. **HETI-08-2016**, dated 01/15/08, signed and sealed by Candido F. Font, P.E.
(Submitted under NOA No. 08-0527.18)

Ishaq I. Chanda

Ishaq I. Chanda, P.E.
Product Control Unit Supervisor
NOA No. 23-0907.04
Expiration Date: November 06, 2028
Approval Date: October 28, 2023

NOTICE OF ACCEPTANCE: EVIDENCE SUBMITTED

1. EVIDENCE SUBMITTED UNDER PREVIOUS NOA's (CONTINUED)

B. TESTS (CONTINUED)

5. Test reports on: 1) Air Infiltration Test, per FBC, TAS 202-94
2) Uniform Static Air Pressure Test, Loading per FBC, TAS 202-94
3) Water Resistance Test, per FBC, TAS 202-94
4) Forced Entry Test, per FBC 2411.3.2.1, and TAS 202-94
along with marked-up drawings and installation diagram of an aluminum single hung fin window, prepared by Hurricane Engineering & Testing, Inc., Test Report No. **HETI-07-4324**, dated 01/15/08, signed and sealed by Candido F. Font, P.E.
(Submitted under NOA No. 08-0527.18)

6. Test reports on: 1) Large Missile Impact Test per FBC, TAS 201-94
2) Cyclic Wind Pressure Loading per FBC, TAS 203-94
along with marked-up drawings and installation diagram of an aluminum single hung fin window, prepared by Hurricane Engineering & Testing, Inc., Test Report No. **HETI-07-4325**, dated 01/15/08, signed and sealed by Candido F. Font, P.E.
(Submitted under NOA No. 08-0527.18)

C. CALCULATIONS

1. Anchor verification calculations and structural analysis, complying with FBC, dated 05/16/08 and 07/07/08, prepared by manufacturer, signed and sealed by Thomas J. Sotos, P.E.
(Submitted under NOA No.12-0127.13)

2. Glazing complies with **ASTM E1300-04/09**

D. QUALITY ASSURANCE

1. Miami-Dade Department of Regulatory and Economic Resources (RER).

E. MATERIAL CERTIFICATIONS

1. Notice of Acceptance No. **17-1114.14** issued to **Kuraray America, Inc.** for their "**Trosifol® Ultraclear, Clear and Color PVB Glass Interlayers**" dated 01/18/18, expiring on 07/08/19.

2. Notice of Acceptance No. **17-0712.05** issued to **Eastman Chemical Company (MA)** for their "**Saflex Clear and Color Glass Interlayers**" dated 09/07/17, expiring on 05/21/21.

Ishaq I. Chanda

Manuel Perez, P.E.
Product Control Examiner
NOA No. 20-0813.08
Expiration Date: November 06, 2023
Approval Date: October 05, 2023

NOTICE OF ACCEPTANCE: EVIDENCE SUBMITTED

1. EVIDENCE SUBMITTED UNDER PREVIOUS NOA's (CONTINUED)

F. STATEMENTS

1. Statement letter of conformance, complying with **FBC 6th Edition (2017)** and of no financial interest, issued by manufacturer, dated January 22, 2018, signed and sealed by Thomas J. Sotos, P.E.
(Submitted under NOA No. 17-1212.18)

2. Statement letter dated 01/22/18 of the editorial drawing changes issued by Lawson Industries, Inc., signed by Nelson Erazo, Senior Design Engineer.
(Submitted under NOA No. 17-1212.18)

3. Department of State Certification of **LAWSON INDUSTRIES, INC.** as a for profit corporation, active and organized under the laws of the State of Florida, dated 04/11/14 and filed at the Secretary of State.
(Submitted under NOA No. 14-0908.09)

4. Notification of Successor Engineer for manufacturer's NOA document per **Section 61G15-27.001** of the **Florida Administrative Code**, notifying original engineer that the successor engineer is assuming full professional and legal responsibility for all engineering documents pertaining to the NOA No. **08-0527.18**, dated 02/27/09, signed and sealed by Thomas J. Sotos, P.E.
(Submitted under NOA No. 12-0127.13)

5. Laboratory compliance letter for Test Reports No. **HETI-08-2083, HETI-08-2084, HETI-08-2015, HETI-08-2016, HETI-07-4324** and **HETI-07-4325**, all issued by Hurricane Engineering & Testing, Inc., dated from 01/15/08 through 03/14/08, signed and sealed by Candido F. Font, P.E.
(Submitted under NOA No. 08-0527.18)

6. Proposal No. **07-2527** issued by the Product Control, dated 03/29/07, signed by Manuel Perez, P.E.
(Submitted under NOA No. 08-0527.18)

G. OTHERS

1. Notice of Acceptance No. **17-1212.18**, issued to Lawson Industries, Inc. for their Series "SH-7800 (Fin Frame)" Aluminum Single Hung Window – L.M.I., approved on 02/08/18 and expiring on 11/06/18.

Ishaq I. Chanda

Ishaq I. Chanda, P.E.
Product Control Unit Supervisor
NOA No. 23-0907.04
Expiration Date: November 06, 2028
Approval Date: October 05, 2023

NOTICE OF ACCEPTANCE: EVIDENCE SUBMITTED

2. EVIDENCE SUBMITTED under previous approval

A. DRAWINGS

1. Drawing No **L7800-0801**, titled "Series-7800 Single Hung Fin Frame Impact Window", sheets 1 through 4 of 4, dated 03/31/08, with revision **E** dated 07/31/20, prepared by manufacturer, signed and sealed by Thomas J. Sotos, P.E.

B. TESTS

1. None

C. CALCULATIONS

1. None.

D. QUALITY ASSURANCE

1. Miami-Dade Department of Regulatory and Economic Resources (RER)

E. MATERIAL CERTIFICATIONS

1. Notice of Acceptance No. **19-0305.02** issued to **Kuraray America, Inc.** for their "**Trosifol® Ultraclear, Clear and Color PVB Glass Interlayers**" dated 05/09/19, expiring on 07/08/24.

2. Notice of Acceptance No. **20-0622.01** issued to **Eastman Chemical Company (MA)** for their "**Saflex PVB Clear and Color Glass Interlayers**" dated 08/06/20, expiring on 05/21/21.

F. STATEMENTS

1. Statement letter of conformance, complying with **FBC 7th Edition (2020)**, dated August 03, 2020, issued by the manufacturer, signed and sealed by Thomas J. Sotos, P.E.

G. OTHERS

1. Notice of Acceptance No. **18-0911.07**, issued to Lawson Industries, Inc. for their Series "SH-7800 (Fin Frame)" Aluminum Single Hung Window – L.M.I., approved on 10/11/18 and expiring on 11/06/23.

Ishaq I. Chanda

Ishaq I. Chanda, P.E.
Product Control Unit Supervisor
NOA No. 23-0907.04
Expiration Date: November 06, 2028
Approval Date: October 05, 2023

NOTICE OF ACCEPTANCE: EVIDENCE SUBMITTED

4. NEW EVIDENCE SUBMITTED

A. DRAWINGS

1. Drawing No. **L7800-0801**, Rev **F** titled "Series-7800 Single Hung Fin Frame Impact Window", sheets 1 through 4 of 4, dated 03/31/08 and last revised on SEP 06, 2023, prepared by manufacturer, and signed and sealed by Thomas J. Sotos, P.E.

Note: The revision consists of addition of addition of Quanex: Super/ Duraseal spacers.

B. TESTS

1. Test reports on: 1) Air Infiltration Test, per FBC, TAS 202-94
2) Uniform Static Air Pressure Test, Loading per FBC, TAS 202-94
3) Water Resistance Test, per FBC, TAS 202-94
4) Large Missile Impact Test per FBC, TAS 201-94
5) Cyclic Wind Pressure Loading per FBC, TAS 203-94

along with marked-up drawings and installation diagram of an aluminum horizontal sliding window, prepared by Hurricane Engineering & Testing, Inc., Test Report No. **HETI-23-0849**, dated 07/24/23, signed and sealed by Ram N. Tewari, P.E.

C. CALCULATIONS

1. None.

D. QUALITY ASSURANCE

1. Miami-Dade Department of Regulatory and Economic Resources (RER)

E. MATERIAL CERTIFICATIONS

1. Notice of Acceptance No. **19-0305.02** issued to **Kuraray America, Inc.** for their "**Trosifol® Ultraclear, Clear and Color PVB Glass Interlayers**", expiring on 07/08/24.

2. Notice of Acceptance No. **23-0713.18** issued to **Eastman Chemical Company (MA)** for their "**Saflex PVB Clear and Color Glass Interlayers**", expiring on 05/21/26.

F. STATEMENTS

1. Statement letter of conformance, complying with **FBC 8th Edition (2023)**, dated 09/26/23, issued by the manufacturer, signed and sealed by Thomas J. Sotos, P.E.

G. OTHERS

1. This NOA **revises & renews NOA No. 20-0813.08,** updates to FBC 2023, expiring 11/06/28**.**

2. RER Test proposal #**23-0461R** dated 06/16/23, signed by Manny Perez, P.E.

Ishaq I. Chanda

Ishaq I. Chanda, P.E.
Product Control Unit Supervisor
NOA No. 23-0907.04
Expiration Date: November 06, 2028
Approval Date: October 05, 2023

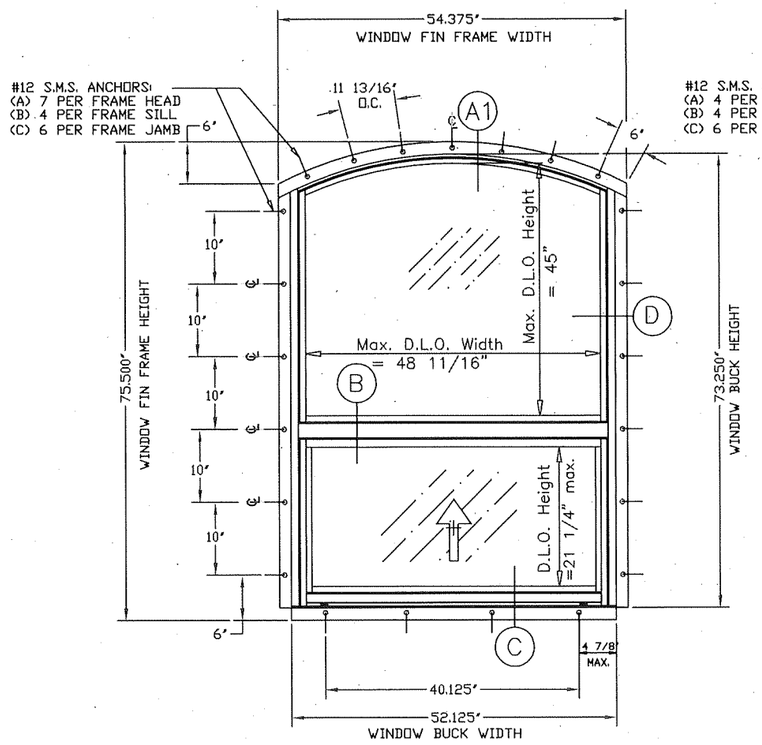

UN-EQUAL LITE RADIUS
ELEVATION

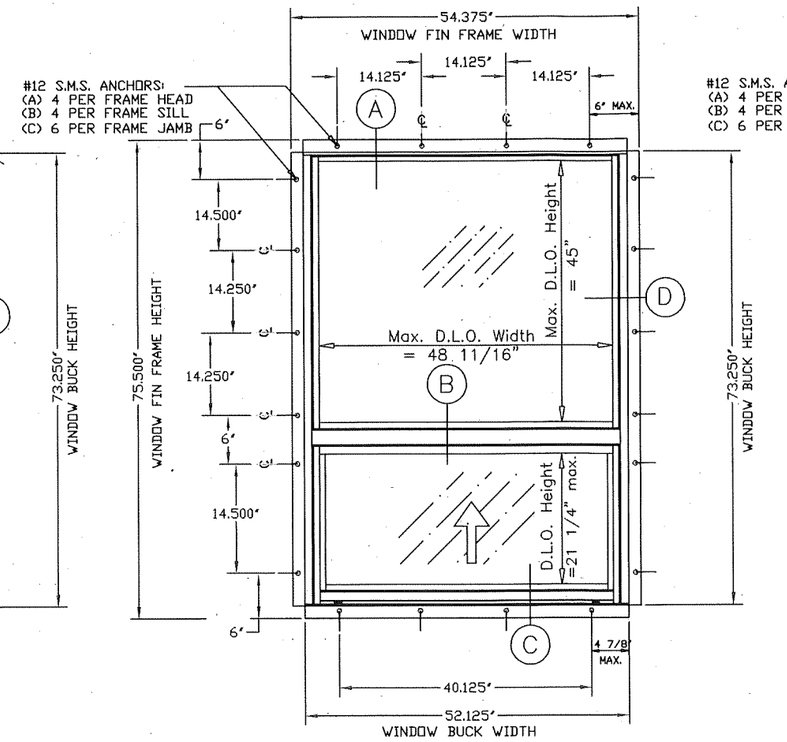

UN-EQUAL LITE
ELEVATION

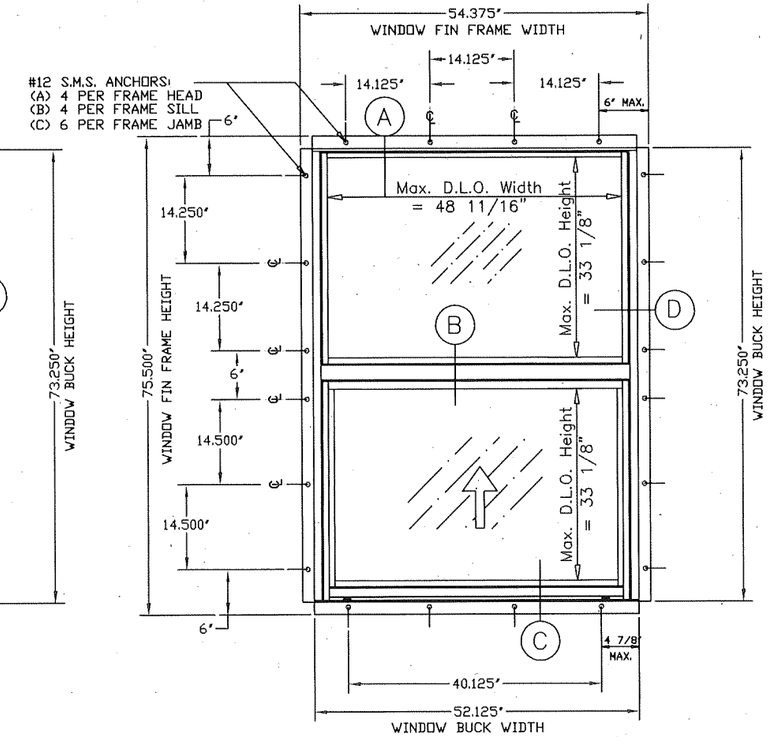

EQUAL LITE
ELEVATION

SERIES-7800 SINGLE HUNG IMPACT WINDOW - FIN FRAME

General Notes:

1.) THIS WINDOW SYSTEM IS DESIGNED AND TESTED TO COMPLY WITH THE REQUIREMENTS OF THE FLORIDA BUILDING CODE (2020-7th Edition & 2023-8th Edition) INCLUDING HIGH VELOCITY HURRICANE ZONE (HVHZ) AND ASTM 1300-98. THIS PRODUCT IS IMPACT RESISTANT.

2.) 2 X WOOD BUCKS SHALL BE INSTALLED AND ANCHORED SO THAT THE BUILDING RESISTS THE SUPERIMPOSED LOADS IN ACCORDANCE WITH REQUIREMENTS OF F.B.C. & TO BE REVIEWED BY BUILDING OFFICIAL.

3.) ANCHORS SHOWN ABOVE ARE AS PER TEST UNITS. ANCHORS ON ALL WINDOW SIZES ARE NOT TO EXCEED THESE MAXIMUM SPACINGS ON CENTER (O.C.).

4.) ANCHOR CONDITIONS NOT DESCRIBED IN THESE DRAWING'S ARE TO BE ENGINEERED ON A SITE SPECIFIC BASIS, UNDER SEPARATE APPROVAL AND TO BE REVIEWED BY BUILDING OFFICIAL.

5.) WINDOWS ARE QUALIFIED FOR USE WITH SINGLE GLAZE LAMINATED GLASS TYPES TABULATED HEREIN (SEE SHEET #3).

6.) WINDOWS ARE QUALIFIED FOR USE WITH DOUBLE GLAZE LAMINATED INSULATED GLASS TYPES TABULATED HEREIN (SEE SHEET #3).

7.) SEE SHEET 3 FOR LOCK DETAILS & OPTIONS.

8.) SEE SHEET 3 FOR GLAZING DETAILS & OPTIONS AND DESIGN PRESSURES.

9.) WOOD OPENING SHALL BE PROTECTED WITH AN APPROVED MOISTURE RESISTANT WEATHERBARRIER (BY OTHERS), PRIOR TO WINDOW INSTALLATION. (SEE SHEET #1 FOR DETAIL)

10.) MATERIALS: INCLUDING BUT NOT LIMITED TO STEEL SCREWS, THAT COME INTO CONTACT WITH OTHER DISSIMILAR MATERIALS SHALL MEET THE REQUIREMENTS OF FLORIDA BUILDING CODE.

11.) EXT. & INT. FALSE COLONIAL MUNTINS ARE OPTIONAL & AND ARE APPLIED W/ SILICONE

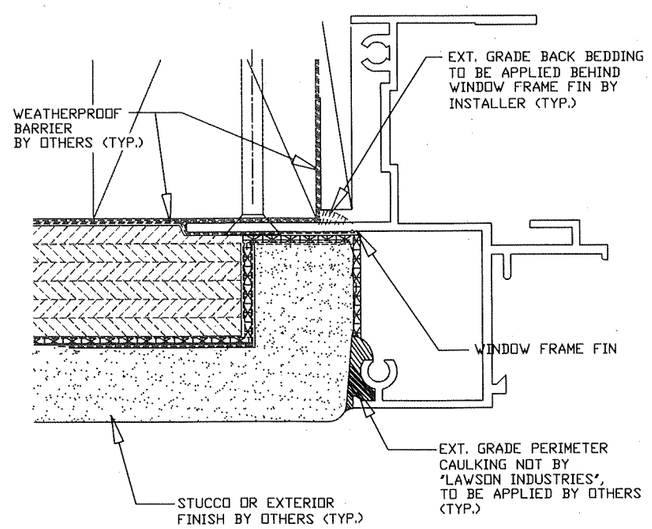

WINDOW INSTALLATION DETAIL

WINDOW INSTALLATION NOTES:

1. THE WINDOW OPENING MUST BE PROTECTED WITH A CODE APPROVED FELT OR MOISTURE/WEATHER BARRIER, APPROX. 12" WIDE THROUGHOUT ENTIRE PERIMETER OF THE WINDOW MOUNTING FIN. (NOT BY LAWSON INDUSTRIES)
2. THE WINDOW FRAME FIN TO BE BACK-BEDDED W/ AN EXT. GRADE CAULK THROUGHOUT THE ENTIRE PERIMETER OF FIN BY WINDOW INSTALLER (TYP.)
3. THE EXPOSED EXT. PERIMETER OF THE WINDOW FRAME TO BE SEALED W/ AN APPROVED EXTERIOR GRADE CAULK BY OTHERS (TYP.)

PRODUCT RENEWED
as complying with the Florida Building Code
NOA-No. 23-0907.04
Expiration Date 11/06/2028
By Ishaq I. Chanda
Miami-Dade Product Control

THOMAS J. SOTOS
PROFESSIONAL ENGINEER
FL LIC. # 55225

THOMAS J. SOTOS
LICENSE No 55225
STATE OF FLORIDA
PROFESSIONAL ENGINEER

SEP 06 2024

DATE

LAWSON INDUSTRIES, INC.
8501 N.W. 90 ST.
MEDLEY, FLORIDA 33166
PH No. (305) 696-8660

MANUFACTURER OF QUALITY ALUMINUM WINDOWS AND GLASS DOORS

SERIES-7800 SINGLE HUNG FIN FRAME IMPACT WINDOW

APPROVED ELEVATIONS, CONFIGURATIONS AND NOTES

Revision #:
Sheet: 1 OF 4
Drawing Number: L7800-0801
Product Reference Number:

Revision Notes:
B. Revised to Comply w/ 2010 FBC
C. Revised date for the 2014 FBC
D. Revised date for the 2017 FBC
E. Revised date for the 2020 FBC
F. Revised date for the 2023 FBC

Drawn By: N. ERAZO
Date Drawn: 03-31-08
Revised By: N. Erazo
Date Revised: 08/31/23
Revision Level: F
Scale:

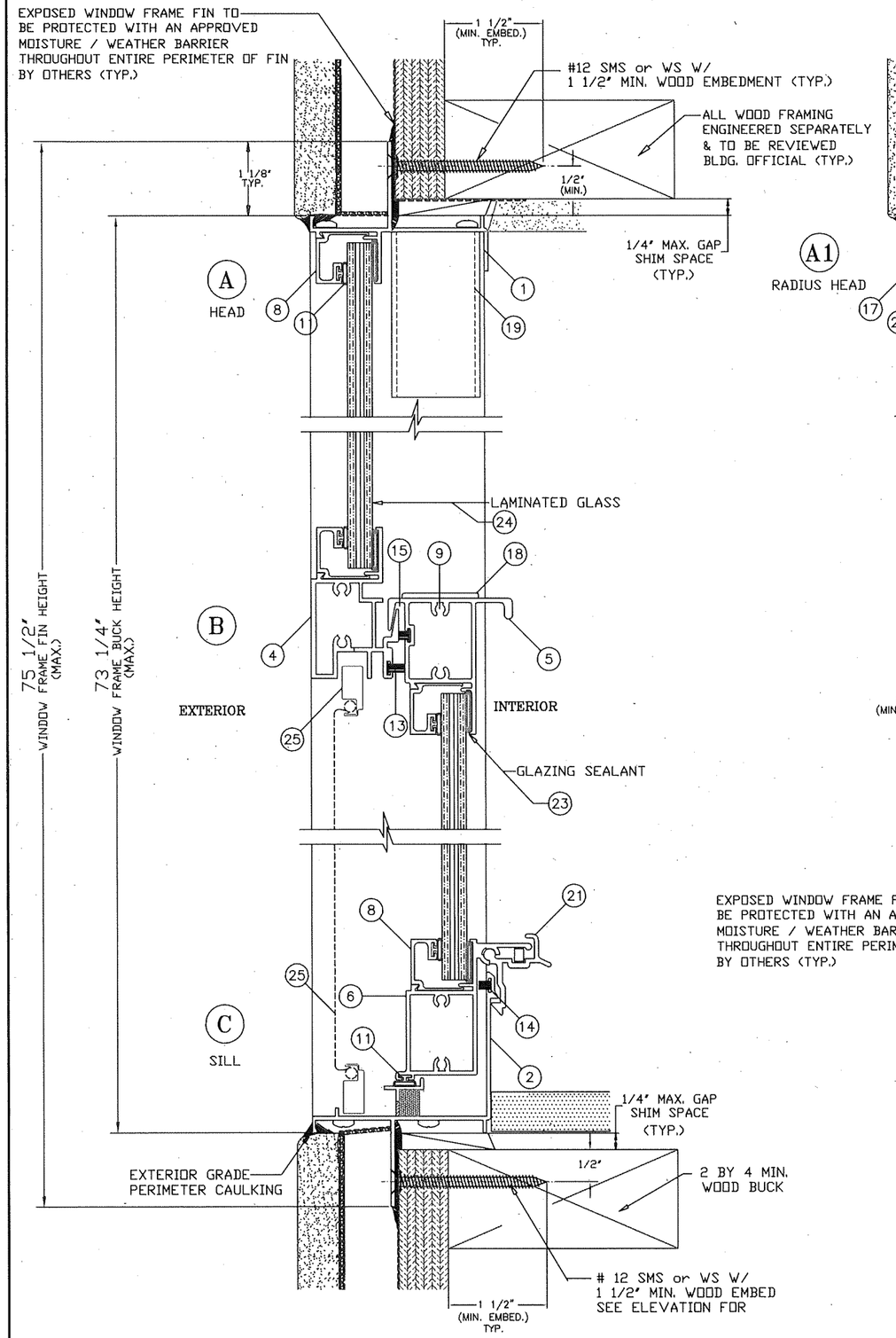

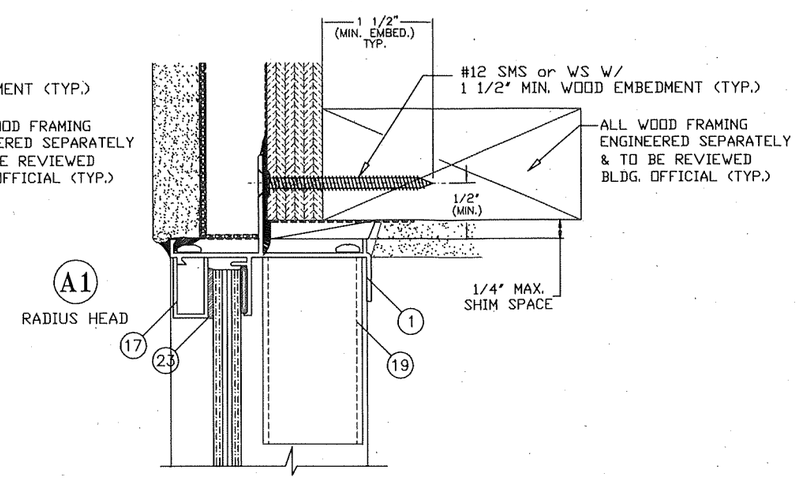

NOTE:
ALL ANCHORS TO BE #12 SMS OR WD. SCREW WITH A MINIMUM OF 1 1/2" PENETRATION INTO WOOD. (REFER TO WINDOW ELEVATIONS ON SHEET 1 FOR MAX. ALLOWABLE ANCHOR SPACING)

* WHEN THE GAP BETWEEN THE WINDOW FRAME AND THE BUCK IS LESS THAN 1/8", SHIMS ARE NOT REQUIRED.

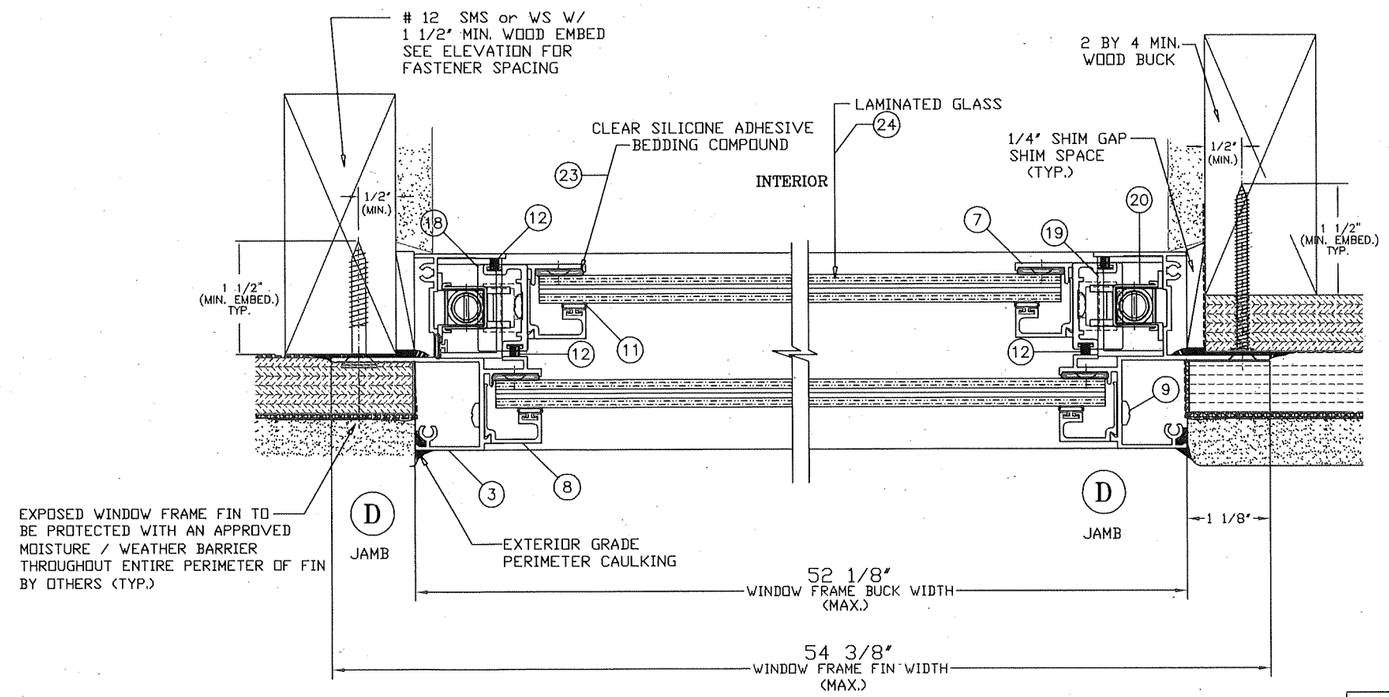

PRODUCT RENEWED
as complying with the Florida Building Code
NOA-No. 23-0907.04
Expiration Date 11/06/2028
By Ishaq I. Chanda
Miami-Dade Product Control

THOMAS J SOTOS
PROFESSIONAL ENGINEER
FL LIC. # 55225

THOMAS J. SOTOS LICENSE No 55225 STATE OF FLORIDA PROFESSIONAL ENGINEER

DATE SEP 02 2024

LAMSON INDUSTRIES, INC.
8501 N.W. 90 ST.
MEDLEY, FLORIDA 33166
PH No. (305) 696-8660

MANUFACTURER OF QUALITY ALUMINUM WINDOWS AND GLASS DOORS

SERIES-7800 SINGLE HUNG FIN FRAME IMPACT WINDOW

WINDOW VERTICAL AND HORIZONTAL CROSS SECTION, DETAILS & NOTES

Revision Notes:	
B. Revised to Comply w/ 2010 FBC	
C. Revised date for the 2014 FBC	
D. Revised date for the 2017 FBC	
E. Revised date for the 2020 FBC	
F. Revised date for the 2023 FBC	
Drawn By: N. ERAZO	Date Drawn: 03-31-08
Revised By: N. Erazo	Date Revised: 08/31/23
Revision Level: F	Scale:

Drawing Number:	Sheet:	Revision #:
L7800-0801	2 OF 4	

Product Reference Number:

7800 FIN IMPACT SINGLE HUNG WINDOW - EQUAL LITE

CODE SIZE	WINDOW DIMENSIONS Width (in)	Height (in)	Glass Type "1" P(+/-) (psf)	Glass Type "2" P(+/-) (psf)	Glass Type "3" P(+/-) (psf)	Glass Type "4" P(+/-) (psf)	Glass Type "5" P(+/-) (psf)
12	18.125	25	60	60	46	46	60
13	18.125	37.375	60	60	46	46	60
14	18.125	49.625	60	60	46	46	60
14-5	18.125	57.125	60	60	46	46	60
15	18.125	62	60	60	46	46	60
16	18.125	73.25	60	60	46	46	60
H32	25.5	25	60	60	46	46	60
H33	25.5	37.375	60	60	46	46	60
H34	25.5	49.625	60	60	46	46	60
H34-5	25.5	57.125	60	60	46	46	60
H35	25.5	62	60	60	46	46	60
H36	25.5	73.25	60	60	46	46	60
22	36	25	60	60	46	46	60
23	36	37.375	60	60	46	46	60
24	36	49.625	60	60	46	46	60
24-5	36	57.125	60	60	46	46	60
25	36	62	60	60	46	46	60
26	36	73.25	60	60	46	46	60
32	52.125	25	60	60	46	46	60
33	52.125	37.375	60	60	46	46	60
34	52.125	49.625	60	60	46	46	60
34-5	52.125	57.125	60	60	46	46	60
35	52.125	62	60	60	46	46	60
36	52.125	73.25	60	60	46	46	60

Note: (*) WINDOWS WITH GLASS TYPES "4 & 5" INSTALLED ABOVE 30FT.IN THE HVHZ, THE I.G. EXTERIOR LITE SHALL BE TEMPERED.

7800 FIN IMPACT SINGLE HUNG - VIEW WINDOW

CODE SIZE	WINDOW DIMENSIONS Width (in)	Height (in)	Glass Type "1" P(+/-) (psf)	Glass Type "2" P(+/-) (psf)	Glass Type "3" P(+/-) (psf)	Glass Type "4" P(+/-) (psf)	Glass Type "5" P(+/-) (psf)
14 - 2	18.125	49.625	60	60	46	46	60
14 - 3	18.125	49.625	60	60	46	46	60
15 - 3	18.125	62	60	60	46	46	60
15 - 4	18.125	62	60	60	46	46	60
16 - 4	18.125	73.25	60	60	46	46	60
16 - 45	18.125	73.25	60	60	46	46	60
16 - 5	18.125	73.25	60	60	46	46	60
H34 - 2	25.5	49.625	60	60	46	46	60
H34 - 3	25.5	49.625	60	60	46	46	60
H35 - 3	25.5	62	60	60	46	46	60
H35 - 4	25.5	62	60	60	46	46	60
H36 - 4	25.5	73.25	60	60	46	46	60
H36 - 45	25.5	73.25	60	60	46	46	60
H36 - 5	25.5	73.25	60	60	46	46	60
24 - 2	36	49.625	60	60	46	46	60
24 - 3	36	49.625	60	60	46	46	60
25 - 3	36	62	60	60	46	46	60
25 - 4	36	62	60	60	46	46	60
26 - 4	36	73.25	60	60	46	46	60
26 - 45	36	73.25	60	60	46	46	60
26 - 5	36	73.25	60	60	46	46	60
34 - 2	52.125	49.625	60	60	46	46	60
34 - 3	52.125	49.625	60	60	46	46	60
35 - 3	52.125	62	60	60	46	46	60
35 - 4	52.125	62	60	60	46	46	60
36 - 4	52.125	73.25	60	60	46	46	60
36 - 45	52.125	73.25	60	60	46	46	60
36 - 5	52.125	73.25	60	60	46	46	60

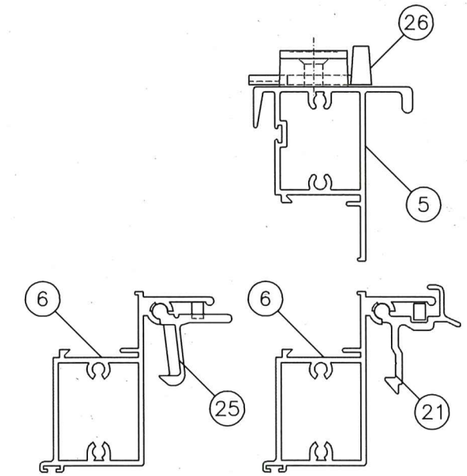

LOCK (LATCH AND SWEEP) OPTIONS

1. BOTH EXTRUDED ALUMINUM AND PLASTIC LIFT HANDLE LOCKS ARE QUALIFIED FOR USE ON ALL WINDOWS.
2. BOTH DIE CAST AND NYLON CAM LOCKS ARE QUALIFIED FOR USE ON ALL WINDOWS.
3. ONLY TWO (2) LOCKS ARE REQUIRED PER EACH VENT.

PRODUCT RENEWED
as complying with the Florida Building Code
NOA-No. 23-0907.04
Expiration Date 11/06/2028
By Ishwar I. Chanda
Miami-Dade Product Control

LAMSON INDUSTRIES, INC.
8501 N.W. 90 ST.
MEDLEY, FLORIDA 33166
PH No. (305) 696-8660

MANUFACTURER OF QUALITY ALUMINUM WINDOWS AND GLASS DOORS

SERIES-7800 SINGLE HUNG FIN FRAME IMPACT WINDOW

DESIGN PRESSURES, GLAZING DETAILS & LOCK OPTIONS

Product Reference Number: | Drawing Number: L7800-0801 | Sheet: 3 OF 4 | Revision #:

Revision Notes:
B. Revised to Comply w/ 2010 FBC
C. Revised date for the 2014 FBC
D. Revised date for the 2017 FBC
E. Revised date for the 2020 FBC
F. Revised date for the 2023 FBC

Drawn By: N. ERAZO | Date Drawn: 03-31-08
Revised By: N. Erazo | Date Revised: 08/31/23
Revision Level: F | Scale:

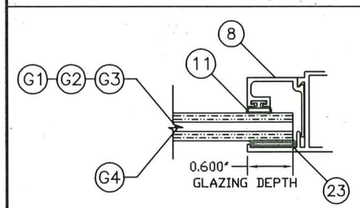

LAMINATED GLASS COMPOSITION – Type 1, & Type 2

ITEM	GLASS DESCRIPTION	LAMINATE DESCRIPTION
1	1/8" HEAT-STRENGHTENED GLASS	1- TROSIFOL PVB
2	0.090" PLASTIC INTERLAYER	or
3	1/8" HEAT-STRENGHTENED GLASS	2- SAFLEX PVB

DETAIL

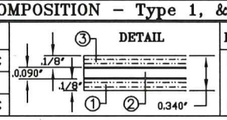

LAMINATED GLASS COMPOSITION – Type 3

ITEM	GLASS DESCRIPTION	LAMINATE DESCRIPTION
1	1/8" ANNEALED GLASS	SAFLEX PVB by: Eastman Chemical Co.
2	0.090" PLASTIC INTERLAYER	
3	1/8" ANNEALED GLASS	

DETAIL

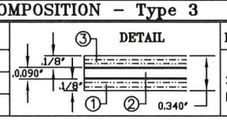

Laminate Types & Options

(3) 1) Trosifol PVB by: Kuraray America Inc.
2) Saflex PVB by: Eastman Chemical Company

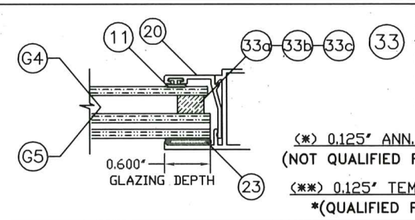

Insulated Spacer Types & Options

33 a) "TrueSeal" Swiggle Seal
33 b) "Quanex" SuperSpacer w/ Isomelt M
33 c) "Quanex" Duraseal

(*) 0.125" ANN. & HS. GLASS (OUTBOARD)
(NOT QUALIFIED FOR SMALL MISSILE IMPACT)

(**) 0.125" TEMPERED GLASS (OUTBOARD)
*(QUALIFIED FOR SMALL MISSILE IMPACT)

INSULATED LAMINATED GLASS COMPOSITION Type 4

ITEM	GLASS DESCRIPTION	LAMINATE DESCRIPTION
1	1/8" ANNEALED GLASS (*), (**)	SAFLEX PVB by: Eastman Chemical Co.
2	0.090" PLASTIC INTERLAYER	
3	1/8" ANNEALED GLASS	
4	1/4" INSULATED AIR SPACE	
5	1/8" ANNEALED GLASS	

DETAIL

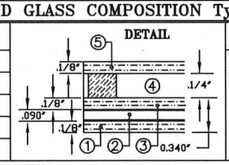

INSULATED LAMINATED GLASS COMPOSITION Type 5

ITEM	GLASS DESCRIPTION	LAMINATE DESCRIPTION
1	1/8" HEAT-STRENGHTENED GLASS	TROSIFOL PVB by: Kuraray America, Inc.
2	0.090" PLASTIC INTERLAYER	
3	1/8" HEAT-STRENGHTENED GLASS	
4	1/4" INSULATED AIR SPACE	
5	1/8" HEAT-STRENGHTENED GLASS	

DETAIL

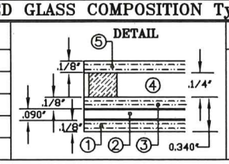

GLAZING DETAILS, OPTIONS AND DESCRIPTION

THOMAS J. SOTOS
PROFESSIONAL ENGINEER
FL. LIC. # 55225

THOMAS J. SOTOS LICENSE No 55225 STATE OF FLORIDA PROFESSIONAL ENGINEER

DATE SEP 06 2023

1 FRAME HEAD
L-7801

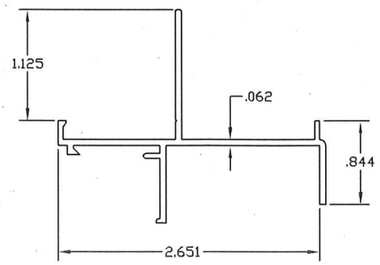

FIXED MEETING RAIL
L-7704

4

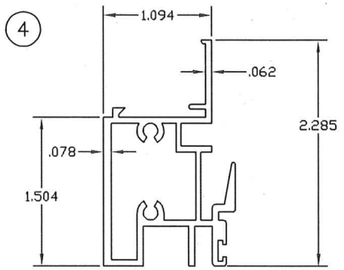

FRAME SILL
L-7802

2

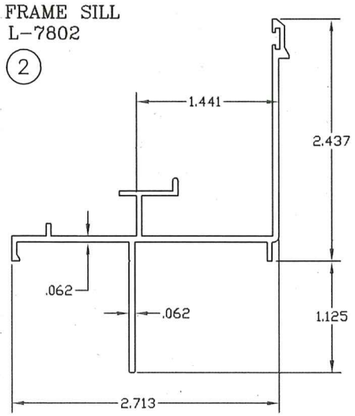

FRAME JAMB
L-7803

3

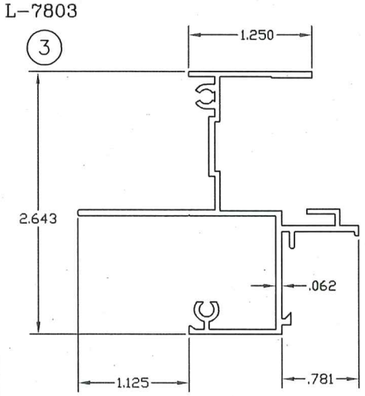

VENT INTERLOCK RAIL
L-7705

5

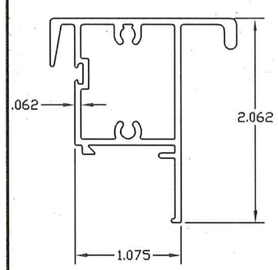

VENT BOTTOM RAIL
L-7706

6

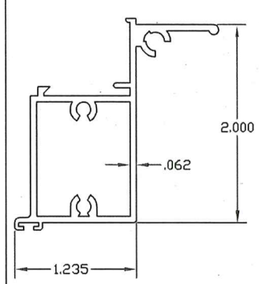

VENT JAMB RAIL
L-7707

7

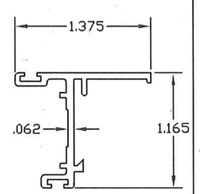

VENT SPRING LATCH
L-7539

6

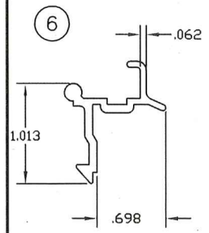

GLAZING BEAD
L-7708

8

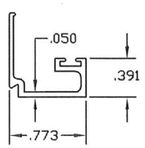

GLAZING BEAD
L-7711

16

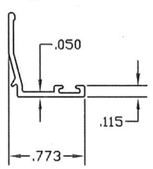

GLAZING BEAD
L-4204

17

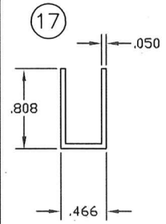

A

FRAME TOP CORNER

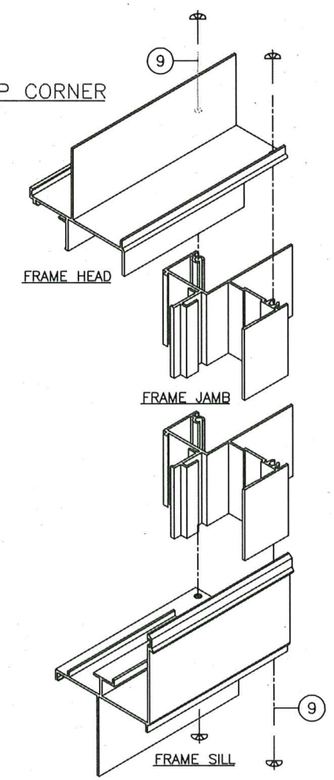

B

FRAME BOTTOM CORNER

VENT TOP CORNER

C

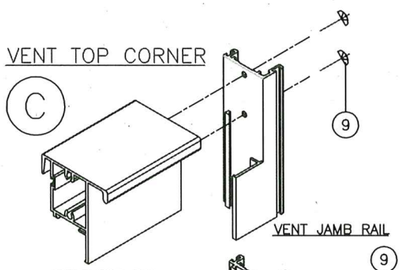

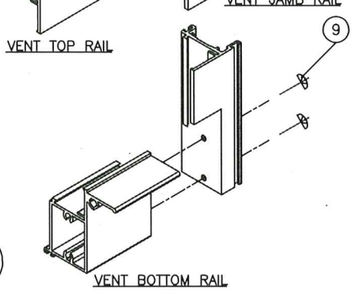

D

VENT BOTTOM CORNER

FRAME & SASH CORNER DETAILS

BILL OF MATERIALS

ITEM #	PART #	REQD.	DESCRIPTION	REMARKS
1	L-7801	1	FIN FRAME HEAD	6063-T6 ALUMINUM
2	L-7802	1	FIN FRAME SILL	6063-T6 ALUMINUM
3	L-7803	2	FIN FRAME JAMB	6063-T6 ALUMINUM
4	L-7704	1	FRAME FIXED MEETING RAIL	6063-T6 ALUMINUM
5	L-7705	1	VENT MEETING (TOP) RAIL	6063-T6 ALUMINUM
6	L-7706	1	VENT BOTTOM (LATCH) RAIL	6063-T6 ALUMINUM
7	L-7707	2	VENT JAMB (SIDE) RAIL	6063-T6 ALUMINUM
8	L-7708	AS REQ'D.	GLAZING BEAD (3/8")	6063-T5 ALUMINUM
9	FS-006	AS REQ'D.	FRAME ASSEMBLY SCREWS	#8 X 3/4" P.H. PHILLIPS
10	FS-040	AS REQD.	INSTALLATION SCREWS	#12 X 1 1/4" F.H./PHIL.
11	L-7531	AS REQ'D.	BULB VINYL WTS'P	1/4" DIA. BULB #3033
12	PWS-003	AS REQ'D.	FIN SEAL WEATHERSTRIP	.187"x.230"
13	PWS-005	AS REQ'D.	FIN SEAL WEATHERSTRIP	.187"x.350"
14	PWS-009	AS REQ'D.	FIN SEAL WEATHERSTRIP	.187"x.310"
15	HC-024-1	2	SELF ADHESIVE PILE PAD	1/4" X 1 1/2"
16	L-7711	AS REQ'D.	GLAZING BEAD	6063-T5 ALUMINUM
17	L-4204	AS REQ'D.	GLAZING BEAD	6063-T5 ALUMINUM
18	L-7723	1	SASH BALANCE CAM/GUIDE	(2 X VENT)
19	L-7725	2	RIGID VINYL SASH STOP	(2 X FRAME)
20	L-7727	2	BLOCK & TACKLE BALANCE	BSI Balance Systems
21	L-7539	2	VENT EXTRUDED LATCH	(2 X VENT)
22	L-7523	2	VENT LATCH SPRING	(1 x LATCH)
23	SM-5731	AS REQ'D.	GLAZING SILICONE	SM-5731
24	*	2	Laminated Glass	SEE GLAZING DETAILS
33 a	Trueseal	AS REQ'D.	INSULATED Swiggle Spacer	1/4" Air Space
33 b	Quanex	AS REQ'D.	INSULATED SuperSpacer	1/4" Air Space
33 c	Quanex	AS REQ'D.	INSULATED Duraseal	1/4" Air Space
25	HC-057-1	2	VENT MOLDED LATCH	MOLDED NYLON
26	HC-058-1	2	VENT SWEEP LATCH	MOLDED NYLON
27	*	2	FRAME SILL FOAM GASKET	SELF ADHESIVE
28	HC-026-1	1	SCREEN FRAME & MESH	
29	L-7730	1	PRODUCT LABEL	
30	*	2	Assembly Joint Gasket	AT FRAME SILL
31	SM-5504	AS REQ'D.	JOINT SEALANT	SM-5504
32	*	AS REQ'D.	PERIMETER ACRYLIC CAULK	OSI POLYSEAMSEAL

PRODUCT RENEWED
as complying with the Florida Building Code
NOA-No. 23-0907.04
Expiration Date 11/06/2028
By Ishaq I. Chanda
Miami-Dade Product Control

LAMSON INDUSTRIES, INC.
8501 N.W. 90 ST.
MEDLEY, FLORIDA 33166
PH No. (305) 696-8660

MANUFACTURER OF QUALITY ALUMINUM WINDOWS AND GLASS DOORS

SERIES-7800 SINGLE HUNG FIN FRAME IMPACT WINDOW

BILL OF MATERIALS, EXTRUSION DETAILS & CORNER ASSEMBLY DETAILS

Revision Notes:
B. Revised to Comply w/ 2010 FBC
C. Revised date for the 2014 FBC
D. Revised date for the 2017 FBC
E. Revised date for the 2020 FBC
F. Revised date for the 2023 FBC

Drawn By: N. ERAZO
Date Drawn: 03-31-08
Revised By: N. Erazo
Date Revised: 08/31/23
Revision Level: F
Scale:
Product Reference Number:
Drawing Number: L7800-0801
Sheet: 4 OF 4
Revision #:

THOMAS J. SOTOS
PROFESSIONAL ENGINEER
FL. LIC. # 55225

THOMAS J. SOTOS
LICENSE No 55225
STATE OF FLORIDA
PROFESSIONAL ENGINEER

DATE SEP 06 2023