1 Hour Fire-Rated Construction		
wt. 7 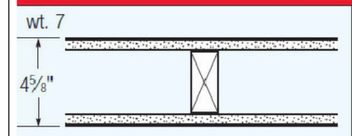	• 1/2" Imperial Firecode C Core gypsum Base, veneer finish only (not drywall) – 2 x 4 stud 16" o.c. – joints finished • 1/16" veneer finish	**U of C 10-27-64**
wt. 7 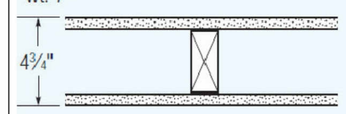	• 5/8" Sheetrock Firecode Core panels, or 5/8" Sheetrock UltraLight panels Firecode X or 5/8" Fiberock panels – 2 x 4 wood stud 16" or 24" o.c. – optional insulation	**UL Des U305, U314**

NOTE:
PROVIDE 1 HOUR RATING AT CEILING AND PENETRATION TO EXHAUST FANS AND MECHANICAL COMPONENTS AS PER FMC 607

2

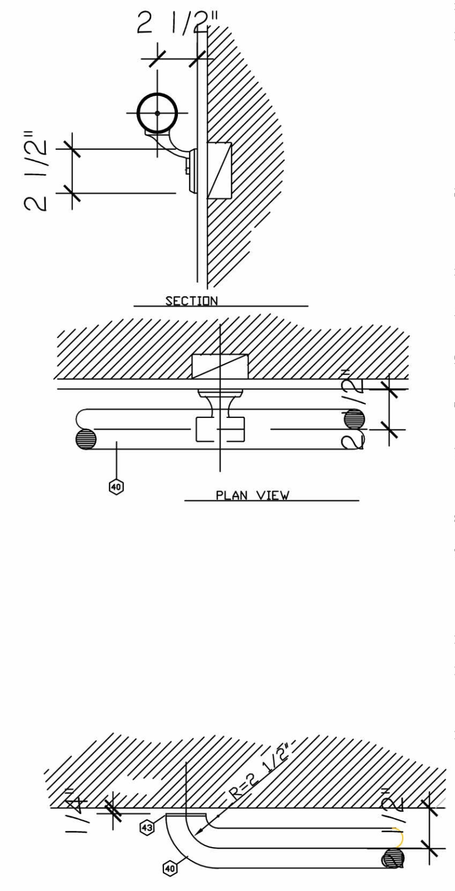

3 STAIR RAILING
SCALE 3" = 1'

STAIR NOTES

1. HANDRAILS
   A. PROVIDE HANDRAIL - MINIMUM ONE SIDE
   B. HEIGHT OF RAILING ABOVE TREADS - 32" (30" MIN. - 34" MAX.)
   C. EXTEND HANDRAILS 12" NOSING OF TOP TREAD AND 12" PLUS TREAD WIDTH BEYOND THE BOTTOM NOSING.
   D. RETURN AND TERMINATE ENDS OF HANDRAILS TO WALL OR POST.
   E. PROVIDE 1 1/2" CLEAR BETWEEN HANDRAIL AND WALL.
   F. CROSS-SECTIONAL DIMENSION HAND GRIP PORTION OF HANDRAILS: 1 1/4" MINIMUM.
2. TREADS
   A. ALL TREADS SURFACES ARE TO BE SLIP RESISTENT
   B. ALL EXPOSED EDGES OF TREADS ARE TO BE SMOOTHROUNDED OR CHAMFERED. NO ABRUPT EDGES AT LOWER FRONT EDGE OF NOSING
3. NOSING
   A. NOSING PROJECTION PAST FACE OR RISER BELOW TO BE 1 1/2" MAXIMUM.
4. RISERS
   A. SUFFICIENTLY SOLID TO PREVENT PASSAGE OF OBJECTS LARGER THAN 1/4".
5. DIMENSIONS (UNLESS NOTED OTHERWISE)
   A. RISERS: 7 1/2" MAX. VERT., 4" MIN.
   B. TREADS: 10" MINIMUM HORIZONTAL.
6. MAXIMUM VARIATION IN HEIGHT OF RISERS OR WIDTH OF TREADS IN ANY GIVEN FLIGHT: 1/4"
7. MINIMUM HEADROOM CLEARANCE MEASURED VERTICALLY FROM THE PLANE OF THE CEILING FINISH TANGENT TO THE TREAD NOSING AT THE STAIRWELL : 6'-8" MINIMUM CLEAR
8. MAXIMUM VERTICAL DISTANCE BETWEEN STAIRWAY LANDINGS: 12'-0"
9. STAIR LANDINGS:
   A. STAIR LANDINGS SHALL BE THE SAME WIDTH AND DEPTH AS THE STAIR IT SERVES WITH MINIMUM DIMENSIONS OF 36" EACH WAY.
   B. PROVIDE HANDRAIL AT STAIRS AND 36" HIGH GUARD RAIL(42" HIGH MINIMUM IF OCCUPANCY LOAD IS HIGHER THAN 10)AT STAIR LANDINGS WITH CLEAR SPACE BETWEEN BALUSTERS AND HORIZONTALTOP RAIL AT 4" MIN. CLR. TYPICAL
10. SEE INTERIOR FINISH SCHEDULE DETAILS AT PLANS FOR STAIR FINISHES.
11. HANDICAPPED COMPLIANCE:
   A. MARK WITH A 2" WIDE STRIPE OF CONTRASTING COLOR PARALLEL TO AND NOT MORE THAN 1" FROM THE NOSE OF THE STEP OR LANDING. THE UPPER APPROACH AND LOWER TREAD OF EACH STAIRUSE A SLIP RESISTANT MATERIAL FOR THE STRIP AT EACH NOSING AND LANDING.
12. ENCLOSED USABLE SPACE UNDER STAIRS:
   A. SHALL BE PROTECTED WITH ONE-HOUR FIRE RESISTIVE PROTECTION.

A HANDRAIL DETAILS (INTERIOR)
SCALE : 3" = 1'-0"

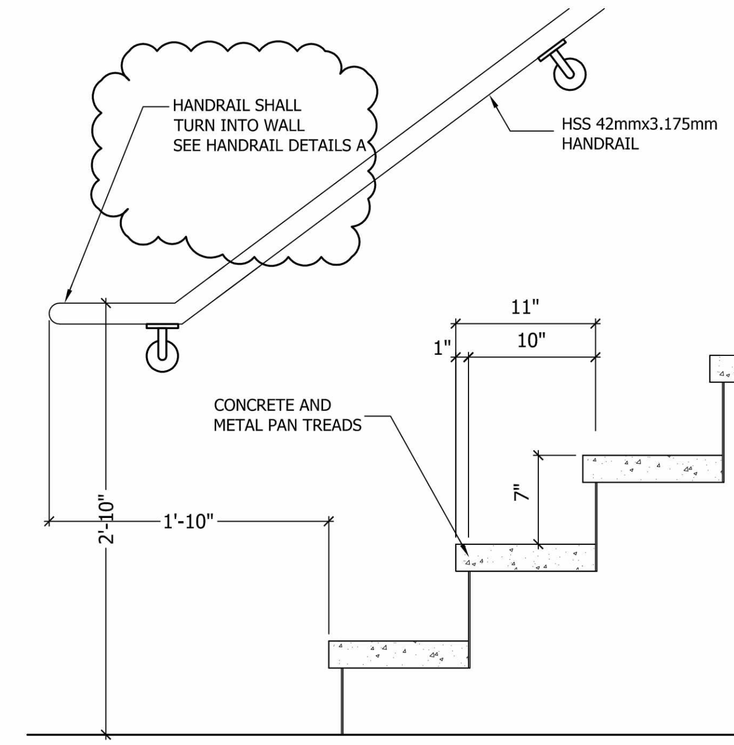

1 STAIR ELEVATION (INTERIOR)
SCALE : 1/4" = 1'-0"

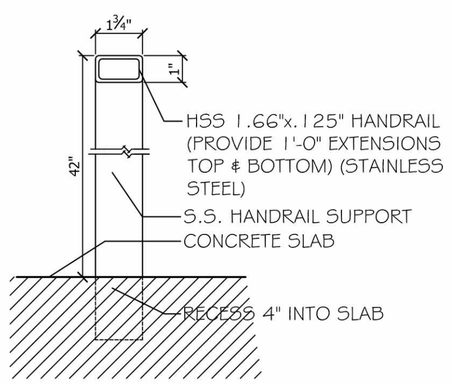

B HANDRAIL DETAILS (EXTERIOR)
SCALE : 3" = 1'-0"

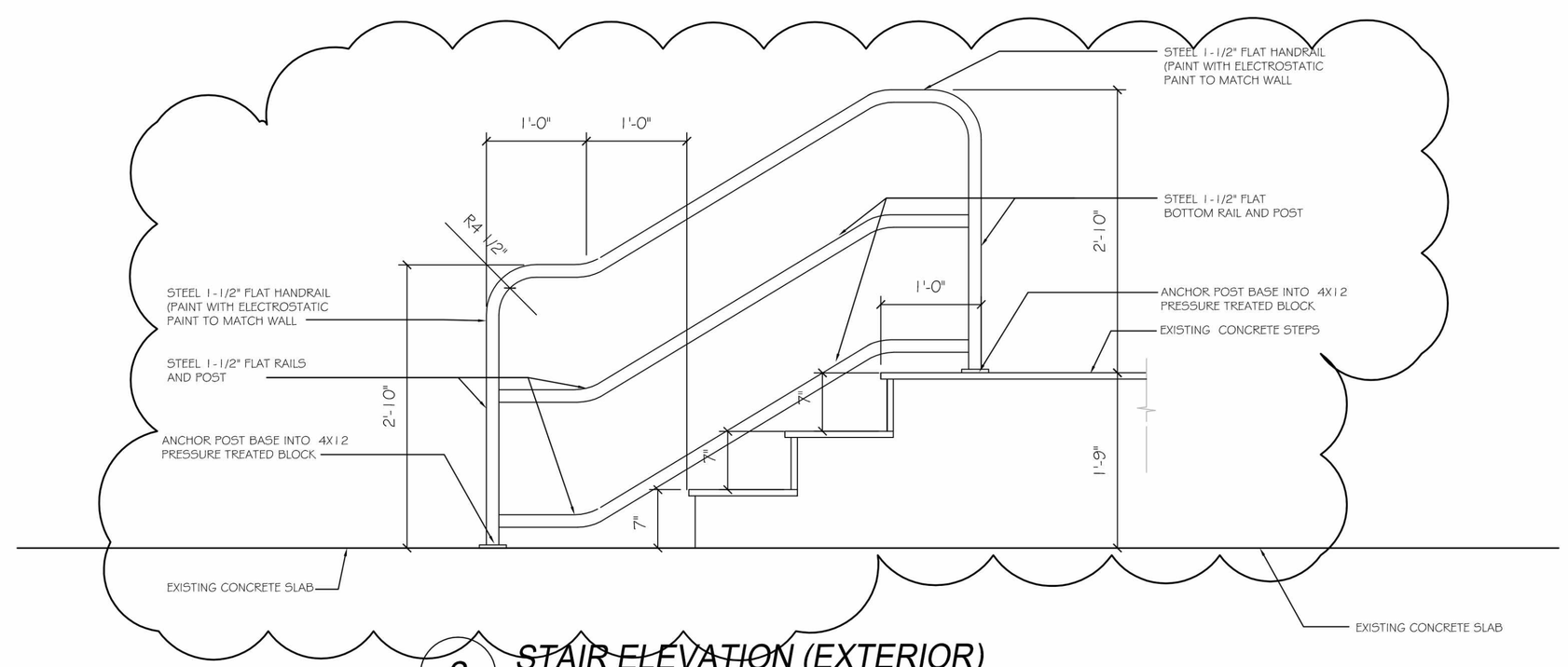

2 STAIR ELEVATION (EXTERIOR)
SCALE : 1/2" = 1'-0"

CLIENT :

241 77 STREET

Issued for Permitting
241 77 street
Miami Beach, FL 33141

CASTELLANOS DESIGN STUDIO

407 LINCOLN ROAD, SUITE 2C
MIAMI BEACH, FL 33139
Tel: 786.218.5335
License #AA 26002467
WWW.CASTELLANOSDESIGN.COM

No.	DATE	ISSUED / REVISED
1	17 FEB/15	PERMITTING
2	11NOV/15	PERMIT REV. 1
3	16FEB/16	PERMIT REV. 2
4	11MAR/16	PERMIT REV. 3

ALL DRAWN AND WRITTEN MATERIAL CONTAINED HEREIN IS THE SOLE PROPERTY OF CASTELLANOS DESIGN STUDIO, LLC. AND MAY NOT BE DUPLICATED, PUBLISHED, DISCLOSED OR USED WITHOUT EXPRESS WRITTEN CONSENT OF CASTELLANOS DESIGN STUDIO, LLC.

THE DRAWINGS ARE SCOPE DOCUMENTS WHICH INDICATE THE GENERAL SCOPE OF WORK, AND SUCH, DO NOT NECESSARILY DESCRIBE ALL WORK REQUIRED FOR THE FULL PERFORMANCE AND COMPLETION OF THE WORK. GENERAL CONTRACTOR IS TO FURNISH AND INSTALL ALL ITEMS REQUIRED FOR THE PROPER COMPLETION OF ITS WORK WITHOUT ADJUSTMENT TO THE CONTRACT AMOUNT UNLESS SCOPE OF WORK CHANGES FROM THAT INDICATED ON THE DRAWINGS. IN THE EVENT OF A CONFLICT WITHIN OR AMONG THE CONTRACT DOCUMENTS, THAT DOCUMENT PLACING THE GREATEST BURDEN UPON GENERAL CONTRACTOR SHALL GOVERN. THE GENERAL CONTRACTOR SHALL CAREFULLY STUDY AND COMPARE ALL DRAWINGS, REPORTING ANY ERROR, INCONSISTENCY OR OMISSION HE MAY DISCOVER AND REPORT TO CDS AND IN NO CASE SHALL PROCEED IN UNCERTAINTY.

SEAL :

WESLEY ART CASTELLANOS
FLORIDA ARCHITECT LICENSE AR 96133

PROJECT NO : 2014-32

DETAILS

CHECKED BY : WC
DRAWN BY : AA
SCALE: AS NOTED
SHEET NO : A-3

© 2015 BY CDS