GENERAL NOTES:

1. BERTHA H.V. ACCORDION SHUTTER SYSTEM WITH H.V. BLADE #3 W/ OR W/O H.V. WINDOW BLADE #3 SHOWN ON THIS PRODUCT EVALUATION DOCUMENT (P.E.D.) HAS BEEN VERIFIED FOR COMPLIANCE IN ACCORDANCE WITH THE 2010 EDITION OF THE FLORIDA BUILDING CODE. THIS ACCORDION SHUTTER SYSTEM MAY BE INSTALLED AT HIGH VELOCITY HURRICANE ZONES.

   DESIGN WIND LOADS SHALL BE DETERMINED AS PER SECTION 1620 OF THE ABOVE MENTIONED CODE, FOR A BASIC WIND SPEED REQUIRED BY THE JURISDICTION WHERE SHUTTER WILL BE INSTALLED WITH A DIRECTIONALITY FACTOR Kd=0.85, USING ASCE 7-10 FOR INSTALLATIONS UNDER 2010 FBC AND SHALL NOT EXCEED THE MAXIMUM (A.S.D.) DESIGN PRESSURE RATINGS INDICATED ON SHEETS 5, 6, 7, 8 & 18.

   IN ORDER TO VERIFY THE ABOVE CONDITION, ULTIMATE DESIGN WIND LOADS DETERMINED PER ASCE 7-10 SHALL BE FIRST REDUCED TO A.S.D. DESIGN WIND LOADS BY MULTIPLYING THEM BY 0.6 IN ORDER TO COMPARE THESE W/ MAX. (A.S.D) DESIGN PRESSURE RATINGS INDICATED ON SHEETS 5, 6, 7, 8 & 18.

   IN ORDER TO VERIFY THAT ANCHORS ON THIS P.E.D., AS TESTED, WERE NOT OVER STRESSED, A 33 % INCREASE IN ALLOWABLE STRESS FOR WIND LOADS WAS ANALYSIS. A WIND LOAD DURATION FACTOR Cd=1.60 WAS USED FOR VERIFICATION OF FASTENERS SPACING IN WOOD.

   BERTHA H.V. ACCORDION SHUTTER SYSTEM WITH H.V. BLADE #3 W/ OR W/O H.V. WINDOW BLADE #3 ADEQUACY FOR WIND AND IMPACT LOADS HAS BEEN VERIFIED IN ACCORDANCE WITH SECTION 1626 OF THE ABOVE MENTIONED CODE AS PER AMERICAN TEST LAB OF SOUTH FLORIDA REPORTS:

   - (1) H.V. BLADE #3 #0403.01-08, 0825.01-10 (ADDENDUM TO 0403.01-08), 1220.01-10 AND 1209.01-10, AS PER PROTOCOLS TAS-201, TAS 202 & TAS-203, LARGE MISSILE.

   - (1) H.V. BLADE #3 WORKING IN UNISON WITH (1A) H.V. WINDOW BLADE #3 #0829.01-08 AS PER PROTOCOLS TAS-201, TAS 202 & TAS-203, LARGE MISSILE.

   (1) H.V. BLADE #3 AND (1A) H.V. WINDOW BLADE #3 ARE ENGINEERED TO WORK IN UNISON WITH EACH OTHER UNDER THE GENERAL LIMITATIONS AND CONDITIONS OF USE INDICATED ON SHEET 18.

2. BERTHA H.V. ACCORDION PINS (HV SCREWS), USED AT BLADES KNUCKLE SHALL BE #10 X 2 3/4". BERTHA H.V. ACCORDION PINS USED AT HV CENTERMATE SHALL BE #14 X 2 3/4". BERTHA H.V. ACCORDION PINS USED AT HV DIRECT MOUNT SHALL BE #14 X 1 3/4", 410-HT MINIMUM SERIES STAINLESS STEEL SCREWS WITH 135.0 KSI YIELD STRENGTH AND 180 KSI TENSILE STRENGTH. PINS SHALL BE COATED WITH BERTHA HV DACROSHIELD® COATING SYSTEM AS MANUFACTURED BY APPROVED COATING APPLICATORS, REGISTERED WITH AMERICAN SHUTTER SYSTEMS ASSOCIATION. PINS MUST BEAR THE HV MARKING ON THEIR HEAD.
3. ALL ALUMINUM EXTRUSIONS SHALL BE ALUMINUM ASSOCIATION 6063-T6 ALLOY AND TEMPER, WITH Fy = 29.8 ksi MINIMUM (UNLESS OTHERWISE NOTED).
4. ALL SCREWS TO BE STAINLESS STEEL 304 OR 316 AISI SERIES OR CORROSION RESISTANT COATED CARBON STEEL AS PER DIN 50018 AND SECTION 2411.3.3.4 OF THE FLORIDA BUILDING CODE 2007 WITH 50 ksi YIELD STRENGTH AND 90 ksi TENSILE STRENGTH & SHALL COMPLY W/ FLORIDA BUILDING CODE SECTION 2411.3.3.4.
5. BOLTS TO BE ASTM A-307 GALVANIZED STEEL, OR AISI 304 SERIES STAINLESS STEEL WITH 35 ksi MINIMUM YIELD STRENGTH.
6. SEE SHEETS 6 & 8 FOR ANCHORS SPECIFICATIONS ON DIFFERENT SUBSTRATES.
7. THIS BERTHA H.V. ACCORDION SHUTTER SYSTEM BEARS A U.S. PATENT #6779582. COMPONENTS OF THIS APPROVAL ARE COVERED, IN WHOLE OR IN PART BY U.S. PATENT #5458179 ISSUED TO EASTERN METAL SUPPLY, INC.
8. IT SHALL BE THE RESPONSIBILITY OF THE CONTRACTOR TO VERIFY THE SOUNDNESS OF THE STRUCTURE WHERE SHUTTER IS TO BE ATTACHED TO INSURE PROPER ANCHORAGE. CONTRACTOR TO SEAL/CAULK ALL SHUTTER COMPONENT EDGES WHICH REMAIN, THRU FASTENING IN CONTINUOUS CONTACT WITH THE BUILDING TO PREVENT WIND/RAIN INTRUSION.
9. EACH UNIT MUST BEAR PERMANENT LABEL IN A VISIBLE PLACE WITH WARNING NOTE: DURING PERIODS OF HURRICANE WARNINGS HOME OWNER, TENANT, OR OTHERS, MUST PROPERLY CLOSE ALLCENTERMATES AND ENGAGE OR LOCK ALL LOCKS'
10. SHUTTER MANUFACTURER'S LABEL SHALL BE LOCATED ON A READILY VISIBLE LOCATION AT ACCORDION SHUTTER IN ACCORDANCE WITH SECTION 1715.8.3 OF FLORIDA BUILDING CODE. ONE LABEL SHALL BE PLACED FOR EVERY OPENING. LABELING TO COMPLY WITH SECTION 1715.8.2 OF THE FLORIDA BUILDING CODE.
11. BERTHA H.V. ACCORDION SHUTTER SYSTEM WITH H.V. BLADE #3 W/ OR W/O H.V. WINDOW BLADE #3 INSTALLATION SHALL COMPLY WITH SPECS INDICATED IN THIS DRAWING PLUS ANY BUILDING AND ZONING REGULATIONS PROVIDED BY THE JURISDICTION WHERE PERMIT IS APPLIED TO.
12. (a) THIS P.E.D. PREPARED BY THIS ENGINEER IS GENERIC AND DOES NOT PROVIDE INFORMATION FOR A SITE SPECIFIC PROJECT; i.e. WHERE THE SITE CONDITIONS DEVIATE FROM THE P.E.D.

    (b) CONTRACTOR TO BE RESPONSIBLE FOR THE SELECTION, PURCHASE AND INSTALLATION INCLUDING LIFE SAFETY OF THIS PRODUCT, BASED ON THIS P.E.D., PROVIDED HE/SHE DOES NOT DEVIATE FROM THE CONDITIONS DETAILED ON THIS DOCUMENT. CONSTRUCTION SAFETY AT SITE IS THE CONTRACTOR'S RESPONSIBILITY.

    (c) THIS P.E.D. WILL BE CONSIDERED INVALID IF ALTERED BY ANY MEANS.

    (d) SITE SPECIFIC PROJECTS SHALL BE PREPARED BY A FLORIDA REGISTERED ENGINEER OR ARCHITECT WHICH WILL BECOME THE ENGINEER OF RECORD (E.O.R.) FOR THE PROJECT AND WHO WILL BE RESPONSIBLE FOR THE PROPER USE OF THE P.E.D. ENGINEER OF RECORD, ACTING AS A DELEGATED ENGINEER TO THE P.E.D. ENGINEER SHALL SUBMIT TO THIS LATTER THE SITE SPECIFIC DRAWINGS FOR REVIEW.

    (e) THIS P.E.D. SHALL BEAR THE DATE AND ORIGINAL SEAL AND SIGNATURE OF THE PROFESSIONAL ENGINEER OF RECORD THAT PREPARED IT.

TABLE OF CONTENTS

AREA 1: HV BLADES (1) & (1A)

GENERAL NOTES.		SHEET 1
SYSTEM COMPONENTS.	1-21	SHEET 2
SYSTEM COMPONENTS & TYPICAL SHUTTER ASSEMBLY.	21-33A	SHEET 3

AREA 2: HV BLADE (1) AND HV WINDOW BLADE (1A) (WHERE APPLICABLE)

TYPICAL SHUTTER ELEVATION & NOTES ON LOCKS.	SHEET 4
MAXIMUM SPAN TABLES.	SHEET 5
ANCHOR SCHEDULE- CONCRETE	SHEET 6
ANCHOR SCHEDULE- CONCRETE & BLOCK.	SHEET 7
ANCHOR SCHEDULE- WOOD	SHEET 8
INSTALLATION DETAILS 1-6 -CONCRETE & BLOCK	SHEET 9
INSTALLATION DETAILS 7-9 -CONCRETE & BLOCK	SHEET 10
INSTALLATION DETAILS 10 -METAL STUD	SHEET 10A
INST. DETAILS W/ HV CENTERMATES (13) & (14)	SHEET 11
INST. DETAILS W/ HV "T" LOCK CENTERMATES (18) & (19)	SHEET 12
INST. DETAILS W/ HD CENTERMATES (22), (23) & (24)	SHEET 12
END CONNECTION DETAILS 1-6-CONCRETE & BLOCK	SHEET 13
INSTALLATION DETAILS 1W-6W -WOOD	SHEET 14
INSTALLATION DETAILS 7W-10W -WOOD	SHEET 15
END CONNECTION DETAILS 1-6-WOOD	SHEET 16

AREA 3: HV WINDOW BLADE (1A) ONLY

TYPICAL WINDOW BLADE & WINDOW DETAIL	SHEET 17
TYPICAL SHUTTER ELEVATION	SHEET 18

FLORIDA BUILDING CODE (**H**igh **V**elocity **H**urricane **Z**one)

WALTER A. TILLIT JR. LICENSE No. 44167 STATE OF FLORIDA PROFESSIONAL ENGINEER

12/1/11

P.E. SEAL/SIGNATURE/DATE

TILTECO INC.

TILLIT TESTING & ENGINEERING COMPANY
6355 N.W. 36th. St., Ste. 305, VIRGINIA GARDENS, FLORIDA 33166
Phone : (305)871-1530 . Fax : (305)871-1531
e-mail: tilteco@aol.com
EB-0006719
WALTER A. TILLIT Jr. P.E.
FLORIDA Lic. # 44167

A.S.S.A.
American Shutter Systems Association, Inc.
4268 Westroads Drive
West Palm Beach, FL 33407

© 2011 EASTERN METAL SUPPLY, INC.

BERTHA HV™
Accordion Shutter System
H.V. BLADE #3 W/ OR W/O H.V. WINDOW BLADE #3

REV. No	DESCRIPTION	DATE	DRAWN BY: R.E./A.G.
1	OLD 11-072	11/28/11	DATE: 11/28/11
2			DRAWING No
3			11-191
4			
5			SHEET
6			1 OF 18

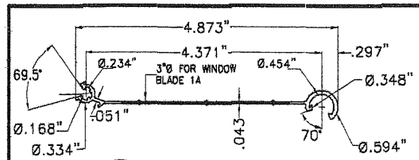

1 **HV BLADE #3**

1A **HV WINDOW BLADE #3 ***

* SEE LIMITATIONS OF USE FOR BLADE 1A ON SHEET 18

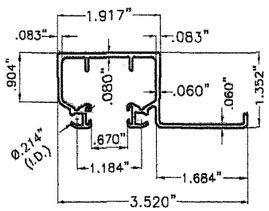

2 **HV HEADER**

QUALIFIED FOR USE W/ HV BLADES 1, 1A

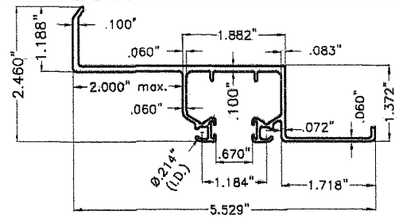

3 **HV B.O. TRACK**

QUALIFIED FOR USE W/ HV BLADES 1, 1A

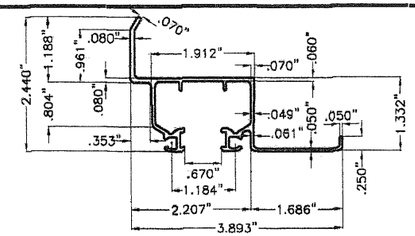

4 **HV HEADER/SILL**

QUALIFIED FOR USE W/ HV BLADES 1, 1A

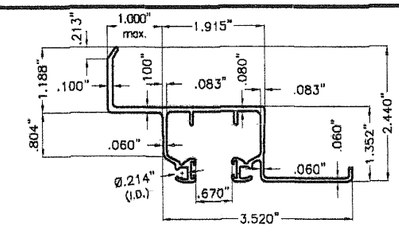

4A **HV 1" B.O. HEADER/SILL**

QUALIFIED FOR USE W/ HV BLADE 1

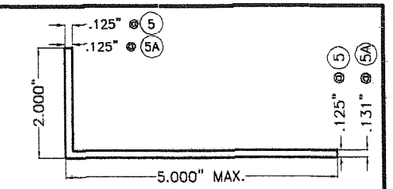

5, 5A **ALUMINUM ANGLES**

QUALIFIED FOR USE W/ HV BLADE 1

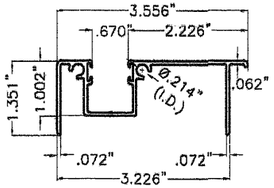

6 **HV ADJ. FLOOR TRACK**

QUALIFIED FOR USE W/ HV BLADES 1, 1A

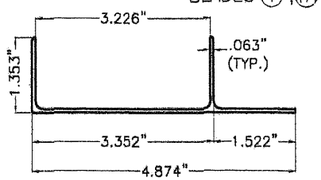

7 **HV ADJ. ADAPTER W/ LIP**

QUALIFIED FOR USE W/ HV BLADES 1, 1A

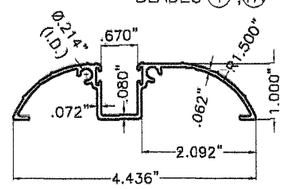

8 **HV WALK-OVER TRACK**

QUALIFIED FOR USE W/ HV BLADE 1

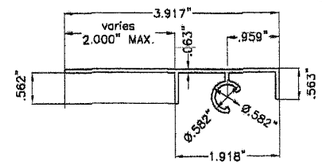

9 **HV DIRECT MOUNT**

QUALIFIED FOR USE W/ HV BLADES 1, 1A

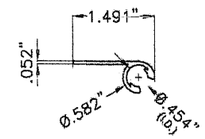

10 **HV 90°/180° STARTER**

QUALIFIED FOR USE W/ HV BLADES 1, 1A

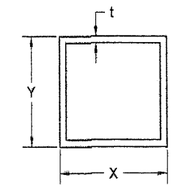

X	Y	t
2"	2"	0.125"
3"	3"	0.090"

11 **CORNER POSTS**

QUALIFIED FOR USE W/ HV BLADES 1, 1A

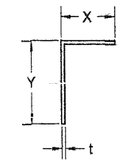

MIN. X	MIN. Y	MIN. t
1"	1"	0.062"

12 **SIDE ANGLES**

QUALIFIED FOR USE W/ HV BLADES 1, 1A

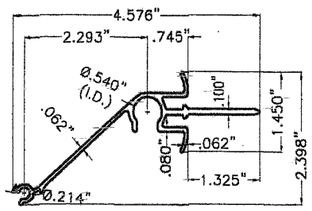

13 **HV CENTERMATE**

QUALIFIED FOR USE W/ HV BLADES 1, 1A

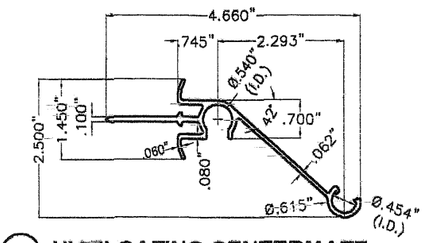

14 **HV FLOATING CENTERMATE**

QUALIFIED FOR USE W/ HV BLADES 1, 1A

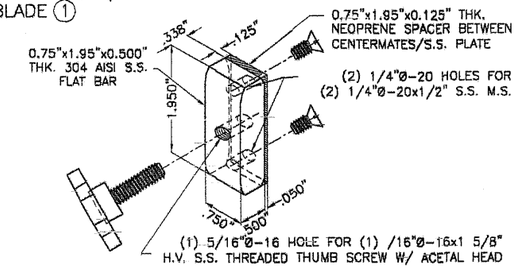

15 **S.S. SALT WATER LOCK**

QUALIFIED FOR USE W/ HV BLADE 1

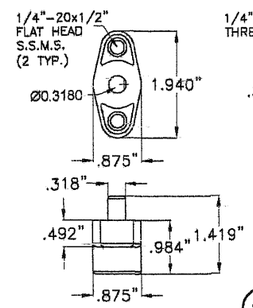

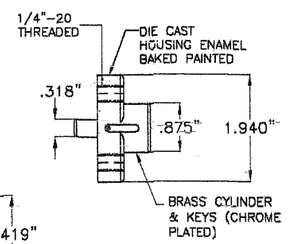

16 **H.V. LOCK**

QUALIFIED FOR USE W/ HV BLADES 1, 1A

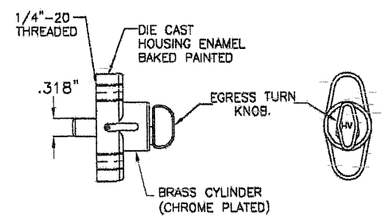

17 **H.V. EGRESS LOCK**

QUALIFIED FOR USE W/ HV BLADES 1, 1A

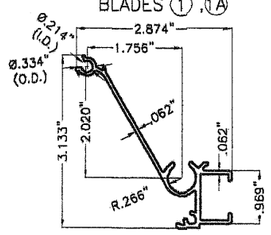

18 **HV MALE "T" LOCK CENTERMATE**

QUALIFIED FOR USE W/ HV BLADE 1

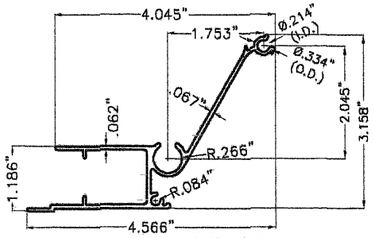

19 **HV FEMALE "T" LOCK CENTERMATE**

QUALIFIED FOR USE W/ HV BLADE 1

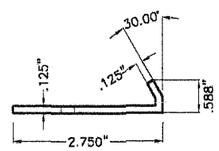

PLAN

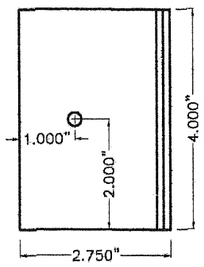

FRONT ELEVATION

20 **"J" CLIP FOR "T" LOCK CENTERMATE**

QUALIFIED FOR USE W/ HV BLADE 1

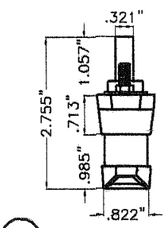

21 **HV "T" LOCK**

QUALIFIED FOR USE W/ HV BLADE 1

COMPONENTS

6063-T6 ALLOY AND TEMPER

SCALE 3/8"=1"

FLORIDA BUILDING CODE (**H**igh **V**elocity **H**urricane **Z**one)

WALTER A. TILLIT JR. LICENSE No. 44167 STATE OF FLORIDA PROFESSIONAL ENGINEER

P.E. SEAL/SIGNATURE/DATE

TILTECO INC.

TILLIT TESTING & ENGINEERING COMPANY
6355 N.W. 36th. St., Ste. 305, VIRGINIA GARDENS, FLORIDA 33166
Phone : (305)871-1530 . Fax : (305)871-1531
e-mail: tilteco@aol.com
EB-0006719
WALTER A. TILLIT Jr. P.E.
FLORIDA Lic. # 44167

A.S.S.A.
American Shutter Systems Association, Inc.
4268 Westroads Drive
West Palm Beach, FL 33407

© 2011 EASTERN METAL SUPPLY, INC.

BERTHA HV™
Accordion Shutter System
H.V. BLADE #3 W/ OR W/O H.V. WINDOW BLADE #3

REV. No	DESCRIPTION	DATE	DRAWN BY: R.E./A.G.
1	OLD 11-072	11/28/11	DATE: 11/28/11
2			DRAWING No
3			11-191
4			
5			SHEET
6			2 OF 18

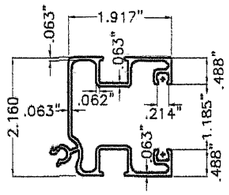

HD CENTERMATE W/ LOCKING ROD

QUALIFIED FOR USE W/ HV BLADE (1)

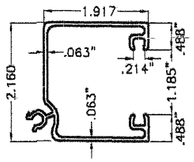

HD CENTERMATE W/ NO LOCKING ROD

QUALIFIED FOR USE W/ HV BLADE (1)

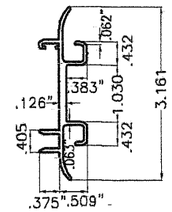

HD CENTERMATE'S INSERT

QUALIFIED FOR USE W/ HV BLADE (1)

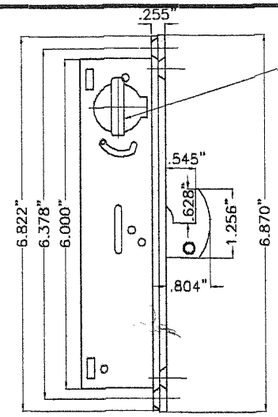

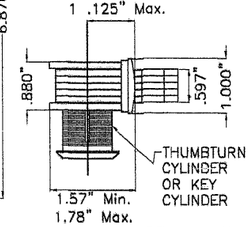

HD LOCK BY REGENT HARDWARE MORTISE LOCKS SERIES 2333 HOOK BOLT LOCK.

QUALIFIED FOR USE W/ HV BLADE (1)

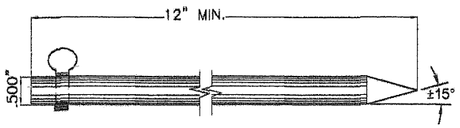

12" LOCKING ROD

QUALIFIED FOR USE W/ HV BLADE (1)

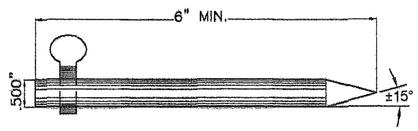

6" LOCKING ROD

QUALIFIED FOR USE W/ HV BLADE (1)

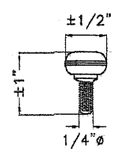

HV 1/4" Ø-20 AISI 304 SERIES S.S. THUMBSCREWS

QUALIFIED FOR USE W/ HV BLADE (1)

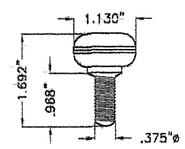

HV 3/8" Ø-16 ACETAL THUMBSCREWS

QUALIFIED FOR USE W/ HV BLADE (1)

△ ◯26 , 26A INSTALLATION WILL REQUIRE A 7/16" HOLE DRILLED AT TRACKS FOR PROPER EMBEDMENT

COMPONENTS (CONTINUED)

6063-T6 ALLOY AND TEMPER

SCALE 3/8"=1"

SHUTTER ASSEMBLY SCHEDULE FOR HV BLADE #3 AND HV WINDOW BLADE #3	
(1)	HV BLADE #3
(1A)	HV WINDOW BLADE #3
(28)	HV LONG RECESSED NYLON BUSHING
(29)	HV SHORT RECESSED NYLON BUSHING
(30)	HV NYLON HAT WASHER
(31)	HV WHEEL CARRIAGE AISI 302-303 SERIES ø.870"x3/16" THICK NYLON WHEEL, 0.188"ø AISI 302 SERIES S.S. RIVETS
(32)	H.V. # 14 x 1 3/4" ACCORDION H.V. DIRECT MOUNT PIN W/ #8 HEAD *
(33)	H.V. # 10 x 2 3/4" ACCORDION H.V. BLADE PIN W/ #8 HEAD *
(33A)	H.V. # 14 x 2 3/4" ACCORDION H.V. CENTERMATE PIN W/ #8 HEAD *

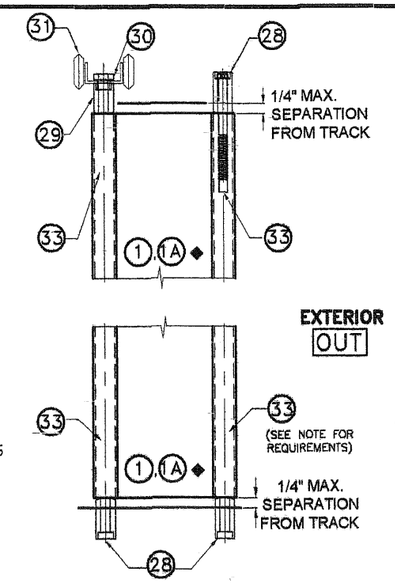

TYPICAL SHUTTER ASSEMBLY

SCALE: 1/4" = 1"

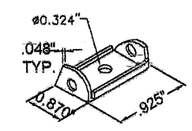

WHEEL CARRIAGE DETAIL

N.T.S.

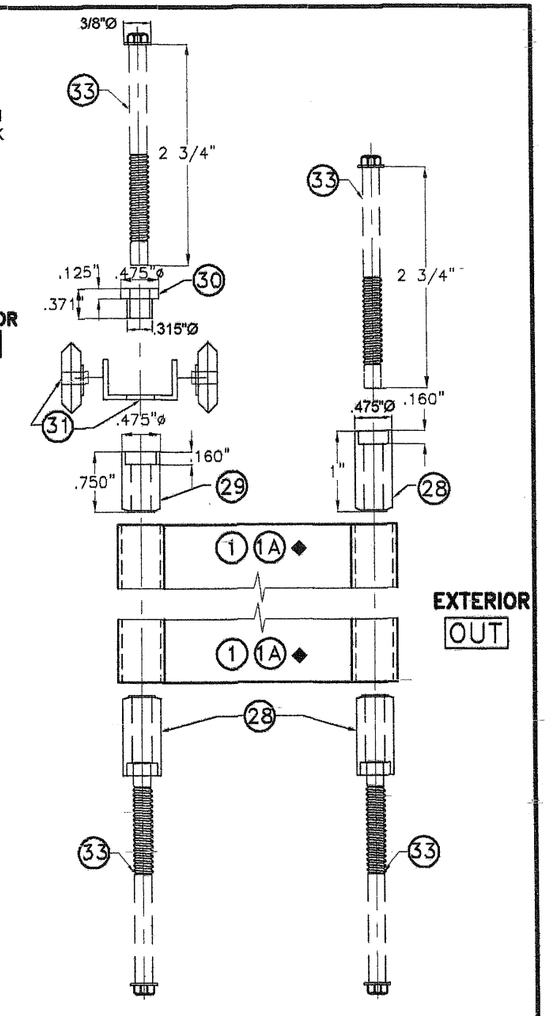

ASSEMBLY LAYOUT

N.T.S.

◆ SEE LIMITATIONS OF USE FOR BLADE (1A) ON SHEET **18.**

* HV PIN REQUIREMENTS FOR (1) HV BLADE #3 & (1A) HV WINDOW BLADE #3.

(1) HV PIN (33) SHALL ALWAYS BE USED AT ALL EXTERIOR AND INTERIOR TOP AND BOTTOM KNUCKLES OF HV ACCORDION SYSTEM W/(1) HV BLADE #3 & (1A) HV WINDOW BLADE #3.

(2) HV PIN (32) W/ 1/2" O.D. 1/16" THICK S.S. WASHER SHALL BE USED FOR DIRECT MOUNT INSTALLATION PER DETAIL X, SHEETS 13 & 16.

(3) HV PIN (33A) SHALL ALWAYS BE USED AT H.V., H.V. "T" LOCK AND H.D. CENTERMATES.

FLORIDA BUILDING CODE (**H**igh **V**elocity **H**urricane **Z**one)

WALTER A. TILLIT JR. LICENSE No. 44167 STATE OF FLORIDA PROFESSIONAL ENGINEER

P.E. SEAL/SIGNATURE/DATE

TILTECO INC.

TILLIT TESTING & ENGINEERING COMPANY
6355 N.W. 36th. St., Ste. 305, VIRGINIA GARDENS, FLORIDA 33166
Phone : (305)871-1530 . Fax : (305)871-1531
e-mail: tilteco@aol.com
EB-0006719
WALTER A. TILLIT Jr. P.E.
FLORIDA Lic. # 44167

A.S.S.A.
American Shutter Systems Association, Inc.
4268 Westroads Drive
West Palm Beach, FL 33407

© 2011 EASTERN METAL SUPPLY, INC.

BERTHA HV™
Accordion Shutter System
H.V. BLADE #3 W/ OR W/O H.V. WINDOW BLADE #3

REV. No	DESCRIPTION	DATE	DRAWN BY: R.E./A.G.
1	OLD 11-072	11/28/11	DATE: 11/28/11
2			DRAWING No
3			11-191
4			
5			SHEET
6			3 OF 18

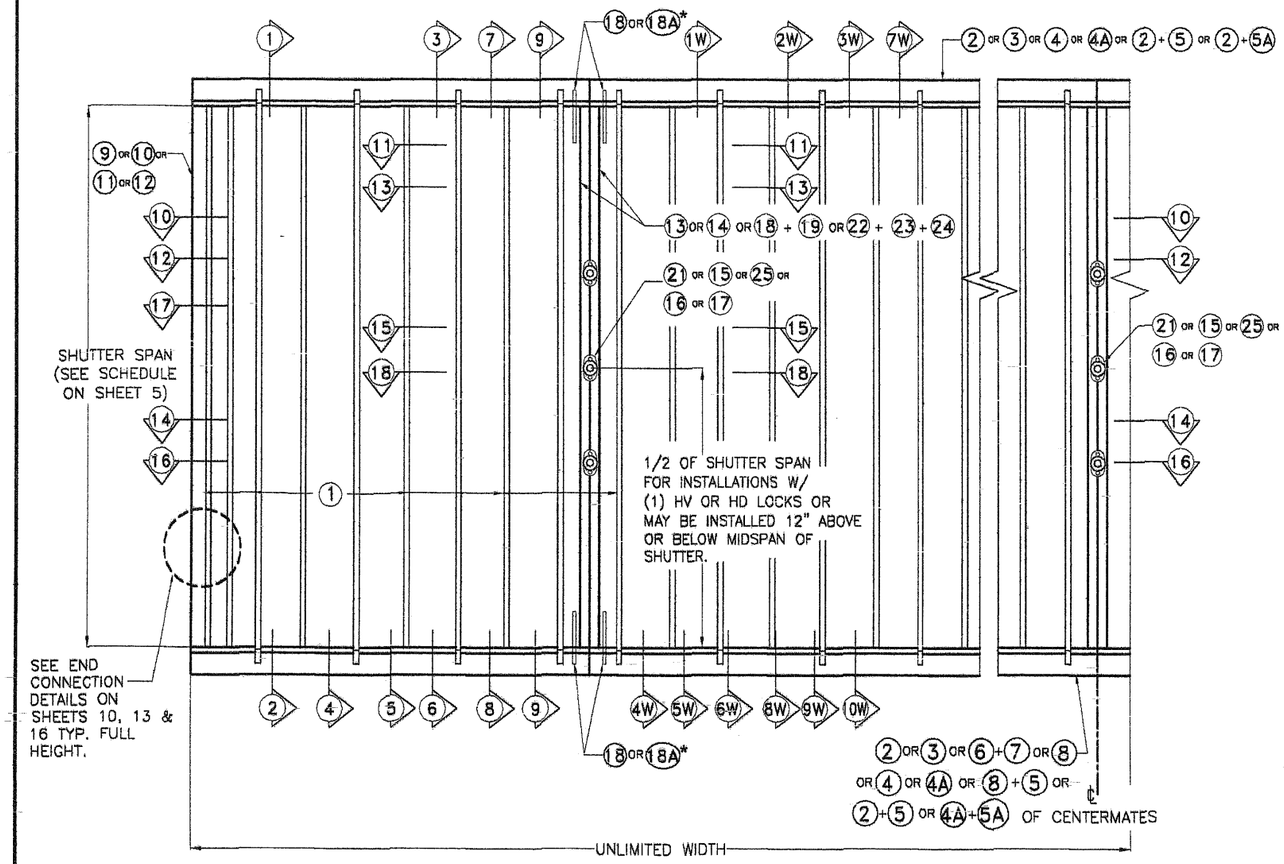

TYPICAL (1) H.V. BLADE #3 SHUTTER ELEVATION

N.T.S.

SEE LIMITATIONS OF USE FOR BLADE (1A) ON SHEET 18.

NOTES ON HV, HV "T" AND HD LOCKS AND CENTERMATES: VALID ONLY FOR INSTALLATIONS W/ HV (1) BLADE

* APPLICATION W/ HV LOCKS AND CENTERMATES:

1. **MANDATORY CONDITION #1:** ONE HV LOCK (15) or (16) or (17) SHALL BE USED AT 1/2 OF SHUTTER SPAN FOR ANY SPAN OR 12" ABOVE OR BELOW 1/2 OF SHUTTER SPAN FOR SPANS UP TO **156"**, AND FOR INSTALLATIONS AT ANY ELEVATION EXCEPT FOR INSTALLATIONS INTO METAL STUDS. HV LOCK (15) or (16) or (17) MAY BE USED AS AN INSIDE OR OUTSIDE LOCK, ATTACHED TO (13) or (14) CENTERMATES W/ (2) 1/4"-20 x 1/2" LONG FLAT HEAD S.S. M.S. LOCATION OF LOCK SHALL BE AS INDICATED ON TYPICAL SHUTTER ELEVATION. USE OF LOCKING RODS (26) W/ (27) AND (27A) IS COMPLETELY OPTIONAL.

2. **MANDATORY CONDITION #2 FOR INSTALLATIONS INTO METAL STUDS:** ONE HV LOCK (15) or (16) or (17) SHALL BE USED AT 1/2 OF SHUTTER SPAN FOR ANY SPAN OR 12" ABOVE OR BELOW 1/2 OF SHUTTER SPAN FOR SPANS UP TO **156"**, AND FOR INSTALLATIONS AT ANY ELEVATION EXCEPT FOR INSTALLATIONS INTO METAL STUD. HV LOCK (15) or (16) or (17) MAY BE USED AS AN INSIDE OR OUTSIDE LOCK, ATTACHED TO (13) or (14) CENTERMATES W/ (2) 1/4"-20 x 1/2" LONG FLAT HEAD S.S. M.S. LOCATION OF LOCK SHALL BE AS INDICATED ON TYPICAL SHUTTER ELEVATION. USE OF LOCKING RODS (26A) W/ (27) OR (27A) TOP AND BOTTOM IS COMPLETELY MANDATORY.

3. **MANDATORY CONDITION #3 FOR KEYSTONE MOUNTING INSTALLATIONS:** ONE HV LOCK (15) or (16) or (17) SHALL BE USED AT 1/2 OF SHUTTER SPAN FOR ANY SPAN OR 12" ABOVE OR BELOW 1/2 OF SHUTTER SPAN FOR SPANS UP TO **96"**, AND FOR INSTALLATIONS AT ANY ELEVATION. HV LOCK (15) or (16) or (17) MAY BE USED AS AN INSIDE OR OUTSIDE LOCK, ATTACHED TO (13) or (14) SYMMETRICAL CENTERMATES W/ (2) 1/4"-20 x 1/2" LONG FLAT HEAD S.S. M.S. LOCATION OF LOCK SHALL BE AS INDICATED ON TYPICAL SHUTTER ELEVATION. USE OF LOCKING RODS (26A) W/ (27) OR (27A) TOP AND BOTTOM IS COMPLETELY MANDATORY.

4. **OPTIONAL CONDITION #1:** IF DESIRED, FOR BETTER PERFORMANCE OR FOR SECURITY PURPOSES, UP TO TWO HV LOCKS (16), (17) OR (15) MAY BE USED AS AN INSIDE OR OUTSIDE LOCK. CONNECTION OF LOCKS TO CENTERMATES (13) OR (14) SHALL BE AS INDICATED ON NOTE (1) ABOVE.
LOCATION OF LOCKS SHALL BE AS INDICATED ON TYPICAL SHUTTER ELEVATION.

* APPLICATION W/ HV "T" LOCKS AND CENTERMATES:

1. **SECOND ALTERNATE TO MANDATORY CONDITION #1 VALID ONLY FOR HV "T" LOCK (21), AND CENTERMATES (18) AND (19):**
ONE ALTERNATE HV "T" LOCK (21) MAY BE INSTALLED IN LIEU OF OTHER LOCKS FOR ANY SPAN AND INSTALLATION AT ANY ELEVATION. ALTERNATE LOCK (21) MAY BE USED AS AN INSIDE OR OUTSIDE LOCK. ATTACHMENT OF LOCK (21) INCLUDES USING "J" CLIP (20), AS SHOWN ON SECTION 15, SHEET 12, WHICH MUST BE CONNECTED TO CENTERMATES (18) AND (19) W/ 1/4" ø-20x1" S.S.M.S. INTO A 1/4"ø x 5/8" RIVNUT. LOCK MAY BE INSTALLED AT MIDSPAN OR 12" MAXIMUM ABOVE AND BELOW MIDSPAN. USE OF TWO LOCKING RODS (26) or (26A) TOP AND BOTTOM IS MANDATORY.

* APPLICATION W/ HD LOCKS & CENTERMATES:

1. **THIRD ALTERNATE TO MANDATORY CONDITION # 1 VALID FOR HD LOCK (25) W/ (2) HD CENTERMATES (22) OR (23) OR (22) + (23) W/ (24):**
ONE ALTERNATE HD LOCK (25) MAYBE USED IN LIEU OF OTHER LOCKS FOR ANY SPAN AND INSTALLATIONS AT ANY ELEVATION. ALTERNATE HD LOCK (25) MAY BE USED AS AN INSIDE OR OUTSIDE LOCK. ATTACHMENT OF HD LOCK (25) TO (24) IS W/ (3) #8 x 3/8" F.H. S.S.M.S., AND INCLUDES REINFORCEMENT INSERT (24) AS SHOWN ON SECTION 18, SHEET 12. LOCK MAY BE INSTALLED AT MIDSPAN OR 12" MAXIMUM BELOW OR ABOVE MIDSPAN. USE OF LOCKING RODS (26) or (26A) IS COMPLETELY OPTIONAL.

FLORIDA BUILDING CODE (**H**igh **V**elocity **H**urricane **Z**one)

WALTER A. TILLIT JR. LICENSE No. 44167 STATE OF FLORIDA PROFESSIONAL ENGINEER

P.E. SEAL/SIGNATURE/DATE

TILTECO INC.
TILLIT TESTING & ENGINEERING COMPANY
6355 N.W. 36th. St., Ste. 305, VIRGINIA GARDENS, FLORIDA 33166
Phone : (305)871-1530 . Fax : (305)871-1531
e-mail: tilteco@aol.com
EB-0006719
WALTER A. TILLIT Jr. P.E.
FLORIDA Lic. # 44167

A.S.S.A.
American Shutter Systems Association, Inc.
4268 Westroads Drive
West Palm Beach, FL 33407

© 2011 EASTERN METAL SUPPLY, INC.

BERTHA HV™
Accordion Shutter System
H.V. BLADE #3 W/ OR W/O H.V. WINDOW BLADE #3

REV. No	DESCRIPTION	DATE	DRAWN BY: R.E./A.G.
1	OLD 11-072	11/28/11	DATE: 11/28/11
2			DRAWING No 11-191
3			
4			
5			SHEET 4 OF 18
6			

MAXIMUM SHUTTER SPAN "L+" OR "L−"* (ft.) FOR INSTALLATIONS W/ ① HV BLADE. Δ

MAXIMUM A.S.D. DESIGN PRESSURE RATING (psf) (+ or -)	POURED CONCRETE, CONCRETE BLOCK † AND WOOD INSTALLATIONS ♣					
	WALL MOUNTING		FLOOR/CEILING MOUNTING		MIN. SEPARATION TO GLASS	
	L^+(FT)	L^-(FT)	L^+(FT)	L^-(FT)	KNUCKLE	LOCK / CENTERMATE
40	12'-7"	13'-0"	12'-7"	13'-0"	3 3/4"	4 3/8"
45	12'-6"	12'-8"	12'-6"	12'-8"	3 3/4"	4 3/8"
50	12'-2"	12'-3"	12'-2"	12'-3"	3 3/4"	4 3/8"
55	12'-1"	12'-1"	12'-1"	12'-1"	3 3/4"	4 3/8"
60	11'-2"	11'-2"	11'-2"	11'-2"	3 3/4"	4 3/8"
65	9'-3"	9'-3"	9'-3"	9'-3"	3 3/4"	4 3/8"
70	8'-10"	8'-10"	8'-10"	8'-10"	2 7/8"	4 1/8"
75	8'-3"	8'-3"	8'-3"	8'-3"	2 7/8"	4 1/8"
80	7'-9"	7'-9"	7'-9"	7'-9"	2 7/8"	4 1/8"
85	7'-3"	7'-3"	7'-3"	7'-3"	2 7/8"	4 1/8"
90	6'-0"	6'-0"	6'-0"	6'-0"	2 7/8"	4 1/8"
95	5'-11"	5'-11"	5'-11"	5'-11"	2 7/8"	4 1/8"
100	5'-9"	5'-9"	5'-9"	5'-9"	2 7/8"	4 1/8"
105	5'-7"	5'-7"	5'-7"	5'-7"	2 7/8"	4 1/8"
110	5'-6"	5'-6"	5'-6"	5'-6"	3"	2 3/4"

† EXCEPT THAT *MAXIMUM SHUTTER SPAN "L+" OR "L−" AND MAXIMUM* A.S.D. DESIGN *PRESSURE RATING FOR INSTALLATIONS INTO CONCRETE OR CONCRETE BLOCK SHALL BE LIMITED AS FOLLOWS:*
1− CONNECTIONS TO KEYSTONE MOUNTING LIMITED TO +64,−72 p.s.f. AND 8'−0" SPAN, SEE SECTION 9 ON SHEET 10.

♣ EXCEPT THAT MAXIMUM SHUTTER SPAN "L+" OR "L−" AND MAXIMUM A.S.D. DESIGN PRESSURE RATING FOR INSTALLATIONS INTO WOOD SHALL BE LIMITED AS FOLLOWS:
1− CONNECTIONS TO PLYWOOD LIMITED TO ±62 p.s.f. AND 9'−6" SPAN, SEE SECTION 5W ON SHEET 14.
2− CONNECTIONS TO HOLLOW CEILING LIMITED TO ±62 p.s.f. AND 8'−6" SPAN, SEE SECTION 2W ON SHEET 14.

MAXIMUM SHUTTER SPAN "L+" OR "L−"* (ft.) FOR INSTALLATIONS W/ ① HV BLADE. Δ

MAXIMUM A.S.D DESIGN PRESSURE RATING (psf) (+ or -)	FOR METAL STUD INSTALLATIONS					
	WALL MOUNTING		FLOOR/CEILING MOUNTING		MIN. SEPARATION TO GLASS	
	L^+(FT)	L^-(FT)	L^+(FT)	L^-(FT)	KNUCKLE	LOCK / CENTERMATE
72	7'-0"	7'-0"	-	-	2 3/4"	4 1/8"

■ SEE SECTION ⑩ ON SHEET 10A.

MAXIMUM SHUTTER SPAN "L+" OR "L−"* (ft.) FOR INSTALLATIONS W/ ① & ⑩A◆ HV BLADES. Δ

MAXIMUM A.S.D. DESIGN PRESSURE RATING (psf) (+ or -)	POURED CONCRETE, CONCRETE BLOCK AND WOOD INSTALLATIONS					
	WALL MOUNTING		FLOOR/CEILING MOUNTING		MIN. SEPARATION TO GLASS	
	L^+(FT)	L^-(FT)	L^+(FT)	L^-(FT)	KNUCKLE	LOCK / CENTERMATE
62	9'-6"	9'-6"	9'-6"	9'-6"	3 1/2"	3 3/8"

SEE LIMITATIONS OF USE FOR BLADE ⑩A ON SHEET 18.

* NOTES:

(1) L+: MAXIMUM ALLOWABLE SPAN FOR A GIVEN POSITIVE A.S.D. DESIGN PRESSURE RATING.
L−: MAXIMUM ALLOWABLE SPAN FOR A GIVEN NEGATIVE A.S.D. DESIGN PRESSURE RATING

(2) PROCEDURE TO DETERMINE MAXIMUM SPAN FOR WALL MOUNTINGS (TOP/BOTTOM) OR FLOOR/CEILING:

GIVEN A A.S.D. DESIGN PRESSURE RATING, DETERMINE MAXIMUM SPAN "L+" FROM SCHEDULES.
GIVEN A NEGATIVE A.S.D. DESIGN PRESSURE RATING, DETERMINE MAXIMUM SPAN "L−" FROM SCHEDULES.

FINAL MAXIMUM ALLOWABLE SPAN IS EQUAL TO THE MINIMUM DETERMINED SPAN BETWEEN "L+" AND "L−".

(3) PROCEDURE TO DETERMINE MAXIMUM SPAN FOR COMBINATIONS IN BETWEEN WALL MOUNTINGS W/ FLOOR/CEILING MOUNTINGS:

FOR A GIVEN POSITIVE A.S.D. DESIGN PRESSURE RATING:
DETERMINE:
L_1+= MAX. SPAN FOR WALL MOUNTING INSTALLATIONS.
L_2+= MAX. SPAN FOR FLOOR/CEILING MOUNTING INSTALLATIONS.

FOR A GIVEN NEGATIVE A.S.D. DESIGN PRESSURE RATING:
DETERMINE:
L_1−= MAX. SPAN FOR WALL MOUNTING INSTALLATIONS.
L_2−= MAX. SPAN FOR FLOOR/CEILING MOUNTING INSTALLATIONS.

FINAL MAXIMUM ALLOWABLE SPAN IS EQUAL TO THE MINIMUM BETWEEN "L_1+", "L_2+", "L_1−" AND "L_2−"

(4) GO TO ANCHOR SCHEDULE ON SHEETS 6 & 7 FOR CONCRETE AND BLOCK, SHEET 8 FOR WOOD AND TO SECTION ON SHEET 10 FOR KEYSTONE MOUNTINGS AND SHEET 10A FOR METAL STUDS WITH FINAL MAXIMUM ALLOWABLE SPAN AND NEGATIVE A.S.D. DESIGN PRESSURE RATING TO DETERMINE MAXIMUM ANCHOR SPACING.

(5) MINIMUM SEPARATION TO GLASS SHALL BE THE GREATEST MEASURED FROM EITHER REAR OF KNUCKLES OR REAR OF LOCKS/CENTERMATES (AS APPLICABLE) TO GLASS.

Δ INSTALLATION LEGEND APPLICABLE FOR ① HV AND ⑩A HV BLADES

MOUNTINGS \ SUBSTRATES	CONCRETE & MASONRY	METAL STUD	WOOD
WALL	1, 2, 3, 4, 5 & 9	10	1W, 3W, 4W 7W, 9W & 10W
FLOOR/CEILING	6, 7 & 8	---	2W, 3W, 6W & 8W

FLORIDA BUILDING CODE (**H**igh **V**elocity **H**urricane **Z**one)

WALTER A. TILLIT JR. LICENSE No. 44167 STATE OF FLORIDA PROFESSIONAL ENGINEER
P.E. SEAL/SIGNATURE/DATE

TILTECO INC.
TILLIT TESTING & ENGINEERING COMPANY
6355 N.W. 36th. St., Ste. 305, VIRGINIA GARDENS, FLORIDA 33166
Phone : (305)871−1530 . Fax : (305)871−1531
e−mail: tilteco@aol.com
EB−0006719
WALTER A. TILLIT Jr. P.E.
FLORIDA Lic. # 44167

A.S.S.A.
American Shutter Systems Association, Inc.
4268 Westroads Drive
West Palm Beach, FL 33407

© 2011 EASTERN METAL SUPPLY, INC.

BERTHA HV™
Accordion Shutter System
H.V. BLADE #3 W/ OR W/O H.V. WINDOW BLADE #3

REV. No	DESCRIPTION	DATE
1	OLD 11-072	11/28/11
2		
3		
4		
5		
6		

DRAWN BY: R.E./A.G.
DATE: 11/28/11
DRAWING No 11−191
SHEET 5 OF 18

MAXIMUM ANCHOR * SPACING (in.) SCHEDULE FOR A GIVEN MAX. SHUTTER SPAN, A.S.D DESIGN NEGATIVE PRESSURE RATING AND A CORRESPONDING MOUNTING TYPE FOR CONCRETE OR CONCRETE BLOCK INSTALLATIONS

(SEE MOUNTINGS 1, 2, 3, 4 & 5 ON SHEET 9)

POURED CONCRETE

MAXIMUM SPAN (ft)	① & ② WALL MOUNTINGS W/ ③, ④ OR ④A — A.S.D. DESIGN NEGATIVE LOAD (psf)									③ & ④ WALL MOUNTING W/ ② + ⑤ — A.S.D. DESIGN NEGATIVE LOAD (psf)									⑤ WALL SILL MOUNTING W/ ⑧ + ⑤ — A.S.D. DESIGN NEGATIVE LOAD (psf)								
	30	40	50	60	70	80	90	100	110	30	40	50	60	70	80	90	100	110	30	40	50	60	70	80	90	100	110
3'-0" OR LESS	9	9	9	9	9	9	9	9	9	9	9	9	9	9	9	9	9	9	9	9	9	9	9	9	9	9	9
	–	–	–	–	–	–	–	–	–	–	–	–	–	–	–	–	–	–	–	–	–	–	–	–	–	–	–
	9	9	9	9	9	9	9	9	9	9	9	9	9	9	9	9	9	9	9	9	9	9	9	9	9	9	9
	9	9	9	9	9	9	9	9	9	9	9	9	9	9	9	9	9	9	9	9	9	9	9	9	9	9	9
4'-0"	9	9	9	9	9	9	9	9	9	9	9	9	9	9	9	9	9	9	9	9	9	9	9	9	9	9	9
	–	–	–	–	–	–	–	–	–	–	–	–	–	–	–	–	–	–	–	–	–	–	–	–	–	–	–
	9	9	9	9	9	9	9	8	6	9	9	9	9	9	9	9	9	9	9	9	9	9	9	9	9	9	9
	9	9	9	9	9	9	9	9	9	9	9	9	9	9	9	9	9	9	9	9	9	9	9	9	9	9	9
5'-0"	9	9	9	9	9	9	9	7.5	6	9	9	9	9	9	9	9	9	9	9	9	9	9	9	9	9	9	9
	–	–	–	–	–	–	–	–	–	–	–	–	–	–	–	–	–	–	–	–	–	–	–	–	–	–	–
	9	9	9	9	9	8	5.5	4.5	3.5	9	9	9	9	9	9	9	9	9	9	9	9	9	9	9	9	9	9
	9	9	9	9	9	9	8.5	7	5.5	9	9	9	9	9	9	9	9	9	9	9	9	9	9	9	9	9	9
6'-0"	9	9	9	9	9	8.5	6.5	5	–	9	9	9	9	9	9	9	9	–	9	9	9	9	9	9	9	9	–
	–	–	–	–	–	–	–	–	–	–	–	–	–	–	–	–	–	–	–	–	–	–	–	–	–	–	–
	9	9	9	9	6.5	4.5	4	3	–	9	9	9	9	9	9	9	9	–	9	9	9	9	9	9	9	9	–
	9	9	9	9	9	7.5	5.5	4.5	–	9	9	9	9	9	9	9	9	–	9	9	9	9	9	9	9	9	–
7'-0"	9	9	9	9	8	6	4.5	–	–	9	9	9	9	9	9	9	–	–	9	9	9	9	9	9	9	–	–
	–	–	–	–	–	–	–	–	–	–	–	–	–	–	–	–	–	–	–	–	–	–	–	–	–	–	–
	9	9	9	6.5	4.5	3.5	3.5	–	–	9	9	9	9	9	9	9	–	–	9	9	9	9	9	9	9	–	–
	9	9	9	9	7	5.5	4	–	–	9	9	9	9	9	9	9	–	–	9	9	9	9	9	9	9	–	–
8'-0"	9	9	9	8.5	6	4.5	–	–	–	9	9	9	9	9	9	–	–	–	9	9	9	9	9	9	–	–	–
	–	–	–	–	–	–	–	–	–	–	–	–	–	–	–	–	–	–	–	–	–	–	–	–	–	–	–
	9	9	8	4.5	3.5	–	–	–	–	9	9	9	9	9	9	–	–	–	9	9	9	9	9	9	–	–	–
	9	9	9	7.5	5.5	4	–	–	–	9	9	9	9	9	9	–	–	–	9	9	9	9	9	9	–	–	–
9'-0"	9	9	9	6.5	4.5	–	–	–	–	9	9	9	9	9	–	–	–	–	9	9	9	9	9	–	–	–	–
	–	–	–	–	–	–	–	–	–	–	–	–	–	–	–	–	–	–	–	–	–	–	–	–	–	–	–
	9	9	5.5	3.5	–	–	–	–	–	9	9	9	9	9	–	–	–	–	9	9	9	9	9	–	–	–	–
	9	9	8.5	5.5	4	–	–	–	–	9	9	9	9	9	–	–	–	–	9	9	9	9	9	–	–	–	–
10'-0"	9	9	7.5	5	4	–	–	–	–	9	9	9	9	9	–	–	–	–	9	9	9	9	9	–	–	–	–
	–	–	–	–	–	–	–	–	–	–	–	–	–	–	–	–	–	–	–	–	–	–	–	–	–	–	–
	9	8	4.5	3	–	–	–	–	–	9	9	9	9	9	–	–	–	–	9	9	9	9	9	–	–	–	–
	9	9	7	4.5	–	–	–	–	–	9	9	9	9	9	–	–	–	–	9	9	9	9	9	–	–	–	–
11'-0"	9	9	6	4.5	3.5	–	–	–	–	9	9	9	9	9	–	–	–	–	9	9	9	9	9	–	–	–	–
	–	–	–	–	–	–	–	–	–	–	–	–	–	–	–	–	–	–	–	–	–	–	–	–	–	–	–
	9	6	3.5	–	–	–	–	–	–	9	9	9	9	9	–	–	–	–	9	9	9	9	9	–	–	–	–
	9	9	5.5	4	–	–	–	–	–	9	9	9	9	9	–	–	–	–	9	9	9	9	9	–	–	–	–
12'-0"	9	8.5	5	3.5	–	–	–	–	–	9	9	9	9	–	–	–	–	–	9	9	9	9	–	–	–	–	–
	–	–	–	–	–	–	–	–	–	–	–	–	–	–	–	–	–	–	–	–	–	–	–	–	–	–	–
	9	4.5	3	–	–	–	–	–	–	9	9	9	9	–	–	–	–	–	9	9	9	9	–	–	–	–	–
	9	7.5	4.5	–	–	–	–	–	–	9	9	9	9	–	–	–	–	–	9	9	9	9	–	–	–	–	–
13'-0"	9	7	–	–	–	–	–	–	–	9	9	–	–	–	–	–	–	–	9	9	–	–	–	–	–	–	–
	–	–	–	–	–	–	–	–	–	–	–	–	–	–	–	–	–	–	–	–	–	–	–	–	–	–	–
	8.5	4	–	–	–	–	–	–	–	9	9	–	–	–	–	–	–	–	9	9	–	–	–	–	–	–	–
	9	6	–	–	–	–	–	–	–	9	9	–	–	–	–	–	–	–	9	9	–	–	–	–	–	–	–

*SPECIFICATIONS ON ANCHOR REQUIREMENTS: POURED CONCRETE OR CONCRETE BLOCK SUBSTRATES

ANCHORS SPACING LEGEND

TAPCON OR TAPCON W/ ADVANCED THREADFORM TECHNOLOGY
ALL POINTS SOLID-SET
BLUE TAP WITH CAP
TAPPER +

1. ANCHORS TO WALL SHALL BE AS FOLLOWS:

(A) TO EXISTING POURED CONCRETE:
- 1/4"ø TAPCON OR TAPCON W/ ADVANCED THREADFORM TECHNOLOGY, AS MANUFACTURED BY I.T.W. BUILDEX. (Min. f'c = 3 ksi).
- 1/4"ø x 3/4" ALL POINTS SOLID-SET ANCHORS AS DISTRIBUTED BY ALL POINTS SCREW, BOLT & SPECIALTY COMPANY. (Min. f'c = 3 ksi).
- 1/4"ø BLUE TAP CONCRETE ANCHORS WITH CAP, AS MANUFACTURED BY FLORIDA FASTENERS DIRECT, INC. (Min. f'c = 2 ksi).
- 1/4"ø TAPPER+ ANCHORS AS MANUFACTURED BY POWERS FASTENERS, INC. (Min. f'c = 3 ksi), AND DISTRIBUTED BY ALL POINTS SCREW, BOLT & SPECIALTY COMPANY OR ANY OTHER APPROVED LICENSED OR AUTHORIZED VENDOR REGISTERED W/ THE AMERICAN SHUTTER SYSTEMS ASSOCIATION, INC.

NOTES:

A.1) MINIMUM EMBEDMENT INTO POURED CONCRETE OF TAPCON OR TAPCON W/ ADVANCED THREADFORM TECHNOLOGY AND TAPPER+ ANCHORS IS 1 3/4", AND 1 1/2" FOR BLUE TAP WITH CAP ANCHORS.

A.2) MINIMUM EMBEDMENT OF 1/4"ø x 3/4" ALL POINTS SOLID-SET ANCHORS SHALL BE 7/8" INTO THE POURED CONCRETE. NO EMBEDMENT INTO STUCCO SHALL BE PERMITTED. 1/4" ø-20 S.S. MACHINE SCREW USED SHALL BE 1 1/2" LONG MINIMUM SHOULD STUCCO EXIST, AND 1" MINIMUM FOR WALLS WITH NO STUCCO.

A.3) IN CASE THAT PRECAST STONE, PRECAST CONCRETE PANELS, PAVERS OR ANY VENEER BE FOUND ON THE EXISTING WALL OR FLOOR, ANCHORS SHALL BE LONG ENOUGH TO REACH THE MAIN STRUCTURE BEHIND SAID WALL FINISHES. ANCHORAGE SHALL BE AS INDICATED ON NOTES A.1) & A.2) ABOVE. FOR INSTALLATIONS ON VINYL SIDING WITH OR WITHOUT METAL STUDS OR EIFS WITH WOOD STUDS CONSULT THIS ENGINEER. FOR INSTALLATIONS INTO EIFS WITH METAL STUDS SEE SHEET 10.

(B) TO EXISTING ASTM C-90 CONCRETE BLOCK WALL:
- 1/4"ø TAPCON OR TAPCON W/ ADVANCED THREADFORM TECHNOLOGY ANCHORS, AS MANUFACTURED BY I.T.W. BUILDEX.
- 1/4"ø x 3/4" ALL POINTS SOLID-SET ANCHORS AS DISTRIBUTED BY ALL POINTS SCREW, BOLT & SPECIALTY COMPANY.
- 1/4"ø BLUE TAP CONCRETE ANCHORS WITH CAP, AS MANUFACTURED BY FLORIDA FASTENERS DIRECT, INC.
- 1/4"ø TAPPER+ ANCHORS AS MANUFACTURED BY POWERS FASTENERS, INC., AND DISTRIBUTED BY ALL POINTS SCREW, BOLT & SPECIALTY COMPANY OR ANY OTHER APPROVED LICENSED OR AUTHORIZED VENDOR REGISTERED W/ THE AMERICAN SHUTTER SYSTEMS ASSOCIATION, INC.

NOTES:

B.1) MINIMUM EMBEDMENT INTO CONCRETE BLOCK OF TAPCON ANCHOR IS 1 1/4" AND 1" FOR TAPCON W/ ADVANCED THREADFORM TECHNOLOGY ANCHOR, AND 1 1/4" FOR TAPPER+ AND BLUE TAP WITH CAP ANCHORS.

B.2) MINIMUM EMBEDMENT OF 1/4"ø x 3/4" ALL POINTS SOLID-SET ANCHORS SHALL BE ENTIRELY EMBEDDED INTO THE CONCRETE BLOCK. NO EMBEDMENT INTO STUCCO SHALL BE PERMITTED. 1/4" ø-20 S.S. MACHINE SCREW USED SHALL BE 1 1/2" LONG MINIMUM SHOULD STUCCO EXIST, AND 1" MINIMUM FOR WALLS WITH NO STUCCO.

B.3) IN CASE THAT PRECAST STONE, PRECAST CONCRETE PANELS, PAVERS OR ANY VENEER BE FOUND ON THE EXISTING WALL OR FLOOR, ANCHORS SHALL BE LONG ENOUGH TO REACH THE MAIN STRUCTURE BEHIND SAID WALL FINISHES. ANCHORAGE SHALL BE AS INDICATED ON NOTES B.1) & B.2) ABOVE. FOR INSTALLATIONS ON VINYL SIDING WITH OR WITHOUT METAL STUDS OR EIFS WITH WOOD STUDS CONSULT THIS ENGINEER. FOR INSTALLATIONS INTO EIFS WITH METAL STUDS SEE SHEET 10.

(C) ANCHORS SHALL BE INSTALLED FOLLOWING ALL OF THE RECOMMENDATIONS AND SPECIFICATIONS OF THE ANCHOR'S MANUFACTURER.

(D) SEE SCHEDULE BELOW FOR EDGE DISTANCE (E.D.) VERSUS SPACING RELATIONSHIP FOR ANCHORS.

EDGE DISTANCE VERSUS SPACING SCHEDULE FOR ANCHORS:

MAXIMUM ANCHOR SPACINGS ARE VALID FOR EDGE DISTANCES INDICATED BELOW. FOR E. D. LESS THAN THE INDICATED, REDUCE ANCHOR SPACING BY MULTIPLYING SPACING SHOWN ON SCHEDULE BY THE FOLLOWING FACTORS. REDUCED SPACING OBTAINED USING FACTOR SHALL NOT BE LESS THAN MINIMUM SPACING INDICATED FOR EACH ANCHOR TYPE.

ACTUAL EDGE DICTANCE E.D.	FACTOR						
	TAPCON	TAPCON WITH ADVANCED THREADFORM TECHNOLOGY		ALL POINTS SOLID SET	BLUE TAP WITH CAP	TAPPER + MIN. SPACING	
	MIN. SPACING = 3"	MIN. SPACING = 3"		MIN. SPACING = 3 1/2"	MIN. SPACING = 3"	3 3/4"	4"
	POURED CONCRETE & CONCRETE BLOCK MIN. E.D. = 3"	POURED CONCRETE MIN. E.D. = 3 1/2"	CONCRETE BLOCK MIN. E.D. = 2 1/2"	POURED CONCRETE & CONCRETE BLOCK MIN. E.D. = 3 1/2"	POURED CONCRETE & CONCRETE BLOCK MIN. E.D. = 3"	POURED CONCRETE MIN. E.D. = 3 1/2"	CONCRETE BLOCK MIN. E.D. = 2 1/2"
3"	1.0	0.90	1.0	0.78	1.0	0.84	1.0
2 1/2"	–	0.81	1.0	–	–	0.67	1.0
2"	–	0.71	–	–	–	0.51	–
1 3/4"	–	0.91	–	–	–	0.43	–
1 1/2"	0.35	–	–	–	–	0.35	–

① HV BLADE #3 OR ① HV BLADE #3 W/ ①A HV WINDOW BLADE WORKING IN UNISON◆

◆ SEE LIMITATIONS OF USE FOR BLADE ①A ON SHEET 18.

FLORIDA BUILDING CODE (**H**igh **V**elocity **H**urricane **Z**one)

WALTER A. TILLIT JR. LICENSE No. 44167 12/7/11 STATE OF FLORIDA PROFESSIONAL ENGINEER

P.E. SEAL/SIGNATURE/DATE

TILTECO INC.

TILLIT TESTING & ENGINEERING COMPANY
6355 N.W. 36th. St., Ste. 305, VIRGINIA GARDENS, FLORIDA 33166
Phone : (305)871-1530 . Fax : (305)871-1531
e-mail: tilteco@aol.com
EB-0006719
WALTER A. TILLIT Jr. P.E.
FLORIDA Lic. # 44167

A.S.S.A.
American Shutter Systems Association, Inc.
4268 Westroads Drive
West Palm Beach, FL 33407

© 2011 EASTERN METAL SUPPLY, INC.

BERTHA HV™
Accordion Shutter System
H.V. BLADE #3 W/ OR W/O H.V. WINDOW BLADE #3

REV. No	DESCRIPTION	DATE
1	OLD 11-072	11/28/11
2		
3		
4		
5		
6		

DRAWN BY: R.E./A.G.
DATE: 11/28/11
DRAWING No 11-191
SHEET 6 OF 18

ANCHORS SPACING LEGEND

TAPCON OR TAPCON W/ ADVANCED THREADFORM TECHNOLOGY
ALL POINTS SOLID-SET
BLUE TAP WITH CAP
TAPPER +

(1) HV BLADE #3 OR (1) HV BLADE #3 W/ (1A) HV WINDOW BLADE WORKING IN UNISON ◆

MAXIMUM ANCHOR * SPACING (in.) SCHEDULE FOR A GIVEN MAX. SHUTTER SPAN, A.S.D. DESIGN NEGATIVE PRESSURE RATING AND A CORRESPONDING MOUNTING TYPE FOR CONCRETE OR CONCRETE BLOCK INSTALLATIONS

(SEE MOUNTINGS 1 THRU 8, SEE SHEETS 9 & 10)

* SEE ANCHOR SPECIFICATIONS ON SHEET 6

◆ SEE LIMITATIONS OF USE FOR BLADE (1A) ON SHEET 18.

CONCRETE BLOCK

MAXIMUM SPAN (ft)	(1) & (2) WALL MOUNTINGS W/ (3) OR (4A)								(1) & (2) WALL MOUNTINGS W/ (4).								(3) & (4) WALL MOUNTING W/ (2) + (5)								(5) WALL SILL MOUNTING W/ (8) + (5)							
	A.S.D. DESIGN NEGATIVE LOAD (psf)								A.S.D. DESIGN NEGATIVE LOAD (psf)								A.S.D. DESIGN NEGATIVE LOAD (psf)								A.S.D. DESIGN NEGATIVE LOAD (psf)							
-	30	40	50	60	70	80	90	110	30	40	50	60	70	80	90	110	30	40	50	60	70	80	90	110	30	40	50	60	70	80	90	110
3'-0" OR LESS	9	9	9	9	9	9	9	9	9	9	9	9	9	9	9	8	9	9	9	9	9	9	9	9	9	9	9	9	9	9	9	9
	–	–	–	–	–	–	–	–	–	–	–	–	–	–	–	–	–	–	–	–	–	–	–	–	–	–	–	–	–	–	–	–
	9	9	9	9	9	9	9	9	9	9	9	9	9	9	9	9	9	9	9	9	9	9	9	9	9	9	9	9	9	9	9	9
	9	9	9	9	9	9	9	9	9	9	9	9	9	9	9	9	9	9	9	9	9	9	9	9	9	9	9	9	9	9	9	9
4'-0"	9	9	9	9	9	9	9	8	9	9	9	9	9	9	5	–	9	9	9	9	9	9	9	8	9	9	9	9	9	9	9	9
	–	–	–	–	–	–	–	–	–	–	–	–	–	–	–	–	–	–	–	–	–	–	–	–	–	–	–	–	–	–	–	–
	9	9	9	9	9	9	9	3	9	9	9	9	9	9	6.5	3	9	9	9	9	9	9	9	9	9	9	9	9	9	9	9	9
	9	9	9	9	9	9	9	9	9	9	9	9	9	9	7	–	9	9	9	9	9	9	9	9	9	9	9	9	9	9	9	9
5'-0"	9	9	9	9	9	8.5	7.5	3	9	9	9	9	6	3.5	–	–	9	9	9	9	9	8.5	7.5	6	9	9	9	9	9	8.5	7.5	6
	–	–	–	–	–	–	–	–	–	–	–	–	–	–	–	–	–	–	–	–	–	–	–	–	–	–	–	–	–	–	–	–
	9	9	9	9	9	8	5.5	–	9	9	9	9	7	4	3	–	9	9	9	9	9	9	9	7.5	9	9	9	9	9	9	9	7.5
	9	9	9	9	9	9	9	4	9	9	9	9	8	4.5	–	–	9	9	9	9	9	9	9	6	9	9	9	9	9	9	9	8
6'-0"	9	9	9	9	8	6	3	–	9	9	9	9	5	3	–	–	9	9	9	9	8	7	6.5	–	9	9	9	9	8	7	6.5	–
	–	–	–	–	–	–	–	–	–	–	–	–	–	–	–	–	–	–	–	–	–	–	–	–	–	–	–	–	–	–	–	–
	9	9	9	8	6	4	4	–	9	9	9	6.5	3.5	–	–	–	9	9	9	9	9	8.5	7.5	–	9	9	9	9	9	8.5	7.5	–
	9	9	9	9	9	8	4	–	9	9	9	7	4.5	–	–	–	9	9	9	9	9	9	8	–	9	9	9	9	9	9	8	–
7'-0"	9	9	9	8	5.5	3	–	–	9	9	9	6	3	–	–	–	9	9	9	8	7	6	5.5	–	9	9	9	8	7	6.5	5.5	–
	–	–	–	–	–	–	–	–	–	–	–	–	–	–	–	–	–	–	–	–	–	–	–	–	–	–	–	–	–	–	–	–
	9	9	9	6	4.5	3.5	3	–	9	9	7	3.5	–	–	–	–	9	9	9	9	8.5	7.5	6.5	–	9	9	9	9	8.5	7.5	6.5	–
	9	9	9	9	7	–	–	–	9	9	7.5	4	–	–	–	–	9	9	9	9	9	8	7	–	9	9	9	9	9	8	7	–
8'-0"	9	9	8.5	6	3	–	–	–	9	9	3.5	–	–	–	–	–	9	9	8.5	7	6	5.5	–	–	9	9	8.5	7	6	5.5	–	–
	–	–	–	–	–	–	–	–	–	–	–	–	–	–	–	–	–	–	–	–	–	–	–	–	–	–	–	–	–	–	–	–
	9	9	8	4	3.5	–	–	–	9	6.5	4	–	–	–	–	–	9	9	9	8.5	7.5	6.6	–	–	9	9	9	8.5	7.5	6.5	–	–
	9	9	9	8	–	–	–	–	9	9	4.5	–	–	–	–	–	9	9	9	9	8	7	–	–	9	9	9	9	8	7	–	–
9'-0"	9	9	7.5	3	–	–	–	–	9	5	–	–	–	–	–	–	9	9	7.5	6.5	5.5	–	–	–	9	9	7.5	6.5	5.5	–	–	–
	–	–	–	–	–	–	–	–	–	–	–	–	–	–	–	–	–	–	–	–	–	–	–	–	–	–	–	–	–	–	–	–
	9	9	5	3.5	–	–	–	–	9	4	3	–	–	–	–	–	9	9	9	7.5	6.5	–	–	–	9	9	9	7.5	6.5	–	–	–
	9	9	9	4	–	–	–	–	9	7	–	–	–	–	–	–	9	9	9	8	7	–	–	–	9	9	9	8	7	–	–	–
10'-0"	9	8.5	4.5	–	–	–	–	–	9	3.5	–	–	–	–	–	–	9	8.5	7	5.5	5	–	–	–	9	8.5	7	5.5	5	–	–	–
	–	–	–	–	–	–	–	–	–	–	–	–	–	–	–	–	–	–	–	–	–	–	–	–	–	–	–	–	–	–	–	–
	9	8	4.5	3	–	–	–	–	9	3	–	–	–	–	–	–	9	9	8	7	6	–	–	–	9	9	8	7	6	–	–	–
	9	9	6	–	–	–	–	–	9	4.5	–	–	–	–	–	–	9	9	9	7.5	6.5	–	–	–	9	9	9	7.5	6.5	–	–	–
11'-0"	9	8	3	–	–	–	–	–	8	–	–	–	–	–	–	–	9	8	6	5	4	–	–	–	9	8	6	5	4.5	–	–	–
	–	–	–	–	–	–	–	–	–	–	–	–	–	–	–	–	–	–	–	–	–	–	–	–	–	–	–	–	–	–	–	–
	9	5	3	–	–	–	–	–	9	9	–	–	–	–	–	–	9	9	7.5	6	5	–	–	–	9	9	7.5	6	5.5	–	–	–
	7	9	4	–	–	–	–	–	7	–	–	–	–	–	–	–	9	9	9	6.5	5	–	–	–	9	9	8	6.5	5.5	–	–	–
12'-0"	9	6	–	–	–	–	–	–	5	–	–	–	–	–	–	–	9	7	5.5	4.5	–	–	–	–	9	7	5.5	4.5	–	–	–	–
	–	–	–	–	–	–	–	–	–	–	–	–	–	–	–	–	–	–	–	–	–	–	–	–	–	–	–	–	–	–	–	–
	9	4.5	3	–	–	–	–	–	6.5	–	–	–	–	–	–	–	9	8.5	7	5.5	–	–	–	–	9	8.5	7	5.5	–	–	–	–
	9	8	–	–	–	–	–	–	9	–	–	–	–	–	–	–	9	9	9	6	–	–	–	–	9	9	7.5	6	–	–	–	–
13'-0"	9	4	–	–	–	–	–	–	4	–	–	–	–	–	–	–	9	6.5	–	–	–	–	–	–	9	6.5	–	–	–	–	–	–
	–	–	–	–	–	–	–	–	–	–	–	–	–	–	–	–	–	–	–	–	–	–	–	–	–	–	–	–	–	–	–	–
	8	4	–	–	–	–	–	–	4.5	–	–	–	–	–	–	–	9	8	–	–	–	–	–	–	9	8	–	–	–	–	–	–
	9	5	–	–	–	–	–	–	5	–	–	–	–	–	–	–	9	8.5	–	–	–	–	–	–	9	8.5	–	–	–	–	–	–

POURED CONCRETE

MAXIMUM SPAN (ft)	(6) FLOOR MOUNTING W/ (8)								(7) CEILING MOUNTING W/ (2)								(8) FLOOR MOUNTING W/ (6) + (7)							
	A.S.D. DESIGN NEGATIVE LOAD (psf)								A.S.D. DESIGN NEGATIVE LOAD (psf)								A.S.D. DESIGN NEGATIVE LOAD (psf)							
-	30	40	50	60	70	80	90	110	30	40	50	60	70	80	90	110	30	40	50	60	70	80	90	110
3'-0" OR LESS	9	9	9	9	9	9	9	9	9	9	9	9	9	9	9	9	9	9	9	9	9	9	9	9
	9	9	9	9	9	9	9	9	–	–	–	–	–	–	–	–	9	9	9	9	9	9	9	9
	9	9	9	9	9	9	9	9	9	9	9	9	9	9	9	9	9	9	9	9	9	9	9	9
	9	9	9	9	9	9	9	9	9	9	9	9	9	9	9	9	9	9	9	8	9	9	9	9
4'-0"	9	9	9	9	9	9	9	9	9	9	9	9	9	9	9	9	9	9	9	9	9	9	9	9
	9	9	9	9	9	9	9	9	–	–	–	–	–	–	–	–	9	9	9	9	9	9	9	9
	9	9	9	9	9	9	9	9	9	9	9	9	9	9	9	9	9	9	9	9	9	9	9	8.5
	9	9	9	9	9	9	9	9	9	9	9	9	9	9	9	9	9	9	9	9	9	9	9	8.5
5'-0"	9	9	9	9	9	9	9	9	9	9	9	9	9	9	9	9	9	9	9	9	9	9	9	8.5
	9	9	9	9	9	9	9	9	–	–	–	–	–	–	–	–	9	9	9	9	9	9	9	8.5
	9	9	9	9	9	9	9	9	9	9	9	9	9	9	8.5	7	9	9	9	9	8.5	7.5	6.5	5.5
	9	9	9	9	9	9	9	9	9	9	9	9	9	9	9	8.5	9	9	9	9	9	9	8.5	7
6'-0"	9	9	9	9	9	9	9	–	9	9	9	9	9	9	9	–	9	9	9	9	9	8.5	7.5	–
	9	9	9	9	9	9	9	–	–	–	–	–	–	–	–	–	9	9	9	9	9	9	8.5	–
	9	9	9	9	9	9	9	–	9	9	9	9	9	9	8	–	9	9	9	9	8.5	7	6	–
	9	9	9	9	9	9	9	–	9	9	9	9	9	9	8.5	–	9	9	9	9	9	8	7	–
7'-0"	9	9	9	9	9	9	9	–	9	9	9	9	9	9	8	–	9	9	9	9	8.5	7.5	6.5	–
	9	9	9	9	9	9	9	–	–	–	–	–	–	–	–	–	9	9	9	9	9	8.5	7.5	–
	9	9	9	9	9	9	9	–	9	9	9	9	8	7	6	–	9	9	8.5	7	6	5.5	4.5	–
	9	9	9	9	9	9	9	–	9	9	9	9	9	8	7.5	–	9	9	9	9	7.5	6.5	6	–
8'-0"	9	9	9	9	9	9	–	–	9	9	9	9	9	8	–	–	9	9	9	8.5	7.5	6.5	–	–
	9	9	9	9	9	9	–	–	–	–	–	–	–	–	–	–	9	9	9	9	8	7.5	–	–
	9	9	9	9	9	9	–	–	9	9	9	8	7	6	–	–	9	9	7.5	6	5.5	4.5	–	–
	9	9	9	9	9	9	–	–	9	9	9	9	8	7	–	–	9	9	9	8	6.5	6	–	–
9'-0"	9	9	9	9	9	9	–	–	9	9	9	9	8	–	–	–	9	9	9	7.5	6.5	–	–	–
	9	9	9	9	9	9	–	–	–	–	–	–	–	–	–	–	9	9	8.5	7.5	–	–	–	–
	9	9	9	9	9	9	–	–	9	9	9	7	6	–	–	–	9	8.5	6.5	5.5	4.5	–	–	–
	9	9	9	9	9	9	–	–	9	9	9	8.5	7.5	–	–	–	9	9	8.5	7	6	–	–	–
10'-0"	9	9	9	9	9	9	–	–	9	9	9	8.5	7	–	–	–	9	9	8.5	7	6	–	–	–
	9	9	9	9	9	9	–	–	–	–	–	–	–	–	–	–	9	9	9	8	6.5	–	–	–
	9	9	9	9	9	9	–	–	9	9	8.5	6.5	5.5	–	–	–	9	7.5	6	5	4	–	–	–
	9	9	9	9	9	9	–	–	9	9	9	7.5	6.5	–	–	–	9	9	7.5	6.5	5.5	–	–	–
11'-0"	9	9	9	9	9	9	–	–	9	9	9	7.5	6.5	–	–	–	9	9	7.5	6.5	5.5	–	–	–
	9	9	9	9	9	9	–	–	–	–	–	–	–	–	–	–	9	9	8.5	7	6	–	–	–
	9	9	9	9	9	9	–	–	9	9	7	6	5	–	–	–	9	7	5.5	4.5	4	–	–	–
	9	9	9	9	9	9	–	–	9	9	8.5	7	6	–	–	–	9	8.5	7	5.5	5	–	–	–
12'-0"	9	9	9	9	9	9	–	–	9	9	8.5	7	–	–	–	–	9	8.5	7	5.5	–	–	–	–
	9	9	9	9	9	9	–	–	–	–	–	–	–	–	–	–	9	9	8	6.5	–	–	–	–
	9	9	9	9	9	9	–	–	9	9	6.5	5.5	–	–	–	–	8.5	6	5	4	–	–	–	–
	9	9	9	9	9	9	–	–	9	9	7.5	6.5	–	–	–	–	9	8	6.5	5	–	–	–	–
13'-0"	9	9	–	–	–	–	–	–	9	9	–	–	–	–	–	–	9	8	–	–	–	–	–	–
	9	9	–	–	–	–	–	–	–	–	–	–	–	–	–	–	9	9	–	–	–	–	–	–
	9	9	–	–	–	–	–	–	9	8	–	–	–	–	–	–	7.5	5.5	–	–	–	–	–	–
	9	9	–	–	–	–	–	–	9	9	–	–	–	–	–	–	9	7	–	–	–	–	–	–

FLORIDA BUILDING CODE (**H**igh **V**elocity **H**urricane **Z**one)

WALTER A. TILLIT JR. LICENSE No. 44167 STATE OF FLORIDA PROFESSIONAL ENGINEER

P.E. SEAL/SIGNATURE/DATE

TILTECO INC.

TILLIT TESTING & ENGINEERING COMPANY
6355 N.W. 36th. St., Ste. 305, VIRGINIA GARDENS, FLORIDA 33166
Phone : (305)871-1530 . Fax : (305)871-1531
e-mail: tilteco@aol.com
EB-0006719
WALTER A. TILLIT Jr. P.E.
FLORIDA Lic. # 44167

A.S.S.A.
American Shutter Systems Association, Inc.
4268 Westroads Drive
West Palm Beach, FL 33407

© 2011 EASTERN METAL SUPPLY, INC.

BERTHA HV™
Accordion Shutter System
H.V. BLADE #3 W/ OR W/O H.V. WINDOW BLADE #3

REV. No	DESCRIPTION	DATE	DRAWN BY: R.E./A.G.
1	OLD 11-072	11/28/11	DATE: 11/28/11
2			DRAWING No
3			11-191
4			
5			SHEET
6			7 OF 18

MAXIMUM ANCHOR SPACING (in.) SCHEDULE FOR A GIVEN MAX. SHUTTER SPAN, A.S.D. DESIGN NEGATIVE PRESSURE RATING AND A CORRESPONDING MOUNTING TYPE.

(SEE MOUNTINGS ON SHEETS 14 & 15).

SUBSTRATE: SOUTHERN PINE No. 2 W/ MIN. G=0.55, DOUGLAS FIR W/ MIN. G=0.50

MAXIMUM SPAN (ft)	WALL MOUNTINGS 1W, 4W, 7W, 9W & 10W — A.S.D. DESIGN NEGATIVE LOAD (psf)									CEILING MOUNT 3W FLOOR MOUNTINGS 6W & 8W — A.S.D. DESIGN NEGATIVE LOAD (psf)								
	30	40	50	60	70	80	90	100	110	30	40	50	60	70	80	90	100	110
3'-0" OR LESS	9	9	9	9	9	9	9	9	9	9	9	9	9	9	8	7	6.5	6
4'-0"	9	9	9	9	9	9	9	9	8	9	9	9	8	7	6	5.5	5	4.5
5'-0"	9	9	9	9	9	9	7.5	6	4.5	9	9	8	6.5	5.5	5	4	4	3.5
6'-0"	9	9	9	9	9	8	5	4	3.5	9	8	6.5	5.5	4.5	4	3.5	3	3
7'-0"	9	9	9	9	6	4.5	–	–	–	9	7	5.5	4.5	4	3.5	–	–	–
8'-0"	9	9	9	6.5	4.5	4.5	–	–	–	8	6	5	4	2.5	3	–	–	–
9'-6"	9	9	6	4	3.5	–	–	–	–	6.5	5	4	3	2.5	–	–	–	–
10'-0"	9	9	6	4	–	–	–	–	–	6.5	5	4	3	–	–	–	–	–
11'-0"	9	9	4.5	3	–	–	–	–	–	6	4.5	3.5	2.5	–	–	–	–	–
12'-0"	9	9	3.5	–	–	–	–	–	–	5.5	4	3	–	–	–	–	–	–
13'-0"	9	5.5	3.5	–	–	–	–	–	–	5	3.5	3	–	–	–	–	–	–

SUBSTRATE: SPRUCE PINE FIR NORTH W/ MIN. G=0.43

MAXIMUM SPAN (ft)	WALL MOUNTINGS 1W, 4W, 7W, 9W & 10W — A.S.D. DESIGN NEGATIVE LOAD (psf)									CEILING MOUNT 3W FLOOR MOUNTINGS 6W & 8W — A.S.D. DESIGN NEGATIVE LOAD (psf)								
	30	40	50	60	70	80	90	100	110	30	40	50	60	70	80	90	100	110
3'-0" OR LESS	9	9	9	9	9	9	9	9	9	9	9	9	9	8	7	6	5.5	5
4'-0"	9	9	9	9	9	9	9	9	9	9	9	8.5	7	6	5	4.5	4	3.5
5'-0"	9	9	9	9	9	8	9	8	8	9	8.5	6.5	5.5	4.5	4	3.5	3	3
6'-0"	9	9	9	9	6.5	4.5	9	8	–	9	7	5.5	4.5	4	3.5	3	2.5	–
7'-0"	9	9	9	9	4.5	3.5	–	–	–	8	6	4.5	4	3.5	3	–	–	–
8'-0"	9	9	8	8	3.5	2.5	–	–	–	7	5	4	3.5	3	2	–	–	–
9'-6"	9	8	5.5	3	2.5	–	–	–	–	5.5	4	3	2.5	2.5	–	–	–	–
10'-0"	9	8	4	2.5	–	–	–	–	–	5.5	4	3	2.5	–	–	–	–	–
11'-0"	9	6	3.5	–	–	–	–	–	–	5	3.5	3	2	–	–	–	–	–
12'-0"	9	4	2.5	–	–	–	–	–	–	4.5	3.5	2.5	–	–	–	–	–	–
13'-0"	8.5	4	2.5	–	–	–	–	–	–	4	3	–	–	–	–	–	–	–

SUBSTRATE: SPRUCE PINE FIR SOUTH W/ MIN. G=0.36

MAXIMUM SPAN (ft)	WALL MOUNTINGS 1W, 4W, 7W, 9W & 10W — A.S.D. DESIGN NEGATIVE LOAD (psf)									CEILING MOUNT 3W FLOOR MOUNTINGS 6W & 8W — A.S.D. DESIGN NEGATIVE LOAD (psf)								
	30	40	50	60	70	80	90	100	110	30	40	50	60	70	80	90	100	110
3'-0" OR LESS	9	9	9	9	9	9	9	9	9	9	9	9	7.5	6.5	5.5	5	4.5	4
4'-0"	9	9	9	9	9	9	8	5.5	4	9	8.5	7	5.5	5	4	3.5	3.5	3
5'-0"	9	9	9	9	9	5.5	4	3	2.5	9	7	5.5	4.5	4	3.5	3	2.5	2.5
6'-0"	9	9	9	8	4.5	3	2.5	–	–	7.5	5.5	4.5	3.5	3	8	2.5	2	–
7'-0"	9	9	9	4.5	3	2.5	–	–	–	6.5	5	4	3	2.5	2.5	–	–	–
8'-0"	9	8	5.5	3	2.5	–	–	–	–	5.5	4	3.5	2.5	2	2	–	–	–
9'-6"	9	5.5	3	2.5	–	–	–	–	–	4.5	3.5	2.5	2	2	–	–	–	–
10'-0"	9	5.5	3	–	–	–	–	–	–	4.5	3.5	2.5	2	–	–	–	–	–
11'-0"	9	4	2.5	–	–	–	–	–	–	4	3	2	–	–	–	–	–	–
12'-0"	8	3	–	–	–	–	–	–	–	4	2.5	–	–	–	–	–	–	–
13'-0"	6	2.5	–	–	–	–	–	–	–	3.5	2.5	–	–	–	–	–	–	–

SUBSTRATE: 1/2" MIN. CDX PLYWOOD

MAXIMUM SPAN (ft)	WALL MOUNTING 5W — A.S.D. DESIGN NEGATIVE LOAD (psf)			
	30	40	50	62
3'-0" OR LESS	9	9	9	9
4'-0"	9	9	9	9
5'-0"	9	9	9	4.5
6'-0"	9	9	6.5	2.5
7'-0"	9	9	3.5	2
8'-0"	9	4.5	2	–
9'-6"	–	–	–	–
10'-0"	–	–	–	–
11'-0"	–	–	–	–
12'-0"	–	–	–	–
13'-0"	–	–	–	–

+ NOTES ON ANCHORS REQUIREMENTS: WOOD SUBSTRATES.

1. ANCHORS TO WALL, FLOOR OR SOLID WOOD SOFFIT SHALL BE AS FOLLOWS:
   – 1/4"ø TAPCON OR TAPCON W/ ADVANCED THREADFORM TECHNOLOGY ANCHORS, AS MANUFACTURED BY I.T.W. BUILDEX W/ MINIMUM PENETRATION OF THREADED AREA AS INDICATED AT EACH SECTION ON SHEETS 14 & 15.
   EXCEPTION: SEE NOTE 2 BELOW.
2. ANCHORS TO HOLLOW CEILING SHALL BE AS PER MOUNTING TYPE 2W, SHEET 14 AND SHALL CONSIST OF LAG SCREWS AS PER NDS 2005 SPECIFICATIONS.
3. SUBSTRATE SHALL CONSIST OF THE FOLLOWING:
   –SOUTHERN PINE No. 2 W/ G=0.55 (N.D.S)
   –DOUGLAS FIR W/ G=0.50 (N.D.S.)
   –SPRUCE PINE FIR NORTH W/ G=0.43 (N.D.S.)
   –SPRUCE PINE FIR SOUTH W/ G=0.36 (N.D.S.)
   –MIN. 1/2" CDX PLYWOOD (1986 APA)
4. ANCHORS SHALL BE INSTALLED FOLLOWING ALL OF THE RECOMMENDATIONS AND SPECIFICATIONS PER NDS 2005

(1) HV BLADE #3 OR (1) HV BLADE #3 W/ (1A) HV WINDOW BLADE #3 WORKING IN UNISON ◆

◆ SEE LIMITATIONS OF USE FOR BLADE (1A) ON SHEET 18.

FLORIDA BUILDING CODE (**H**igh **V**elocity **H**urricane **Z**one)

WALTER A. TILLIT JR. LICENSE No. 44167 STATE OF FLORIDA PROFESSIONAL ENGINEER

P.E. SEAL/SIGNATURE/DATE

TILTECO INC.

TILLIT TESTING & ENGINEERING COMPANY
6355 N.W. 36th. St., Ste. 305, VIRGINIA GARDENS, FLORIDA 33166
Phone : (305)871-1530 . Fax : (305)871-1531
e-mail: tilteco@aol.com
EB-0006719
WALTER A. TILLIT Jr. P.E.
FLORIDA Lic. # 44167

A.S.S.A.
American Shutter Systems Association, Inc.
4268 Westroads Drive
West Palm Beach, FL 33407

© 2011 EASTERN METAL SUPPLY, INC.

BERTHA HV™
Accordion Shutter System
H.V. BLADE #3 W/ OR W/O H.V. WINDOW BLADE #3

REV. No	DESCRIPTION	DATE
1	OLD 11-072	11/28/11
2		
3		
4		
5		
6		

DRAWN BY: R.E./A.G.
DATE: 11/28/11
DRAWING No **11-191**
SHEET **8 OF 18**

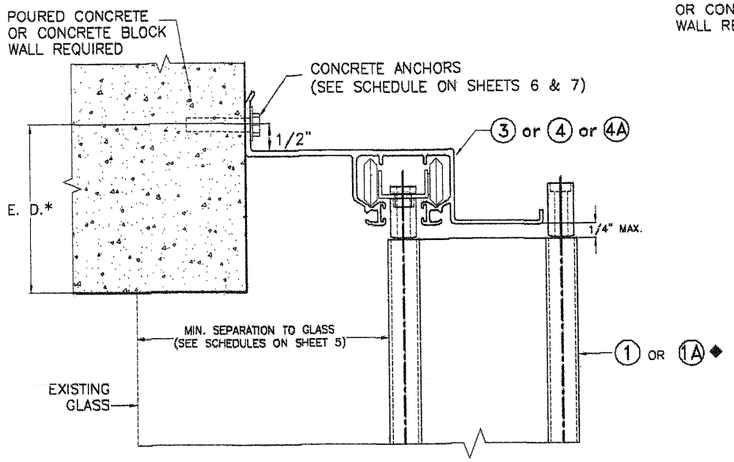

① WALL MOUNTING INSTALLATION

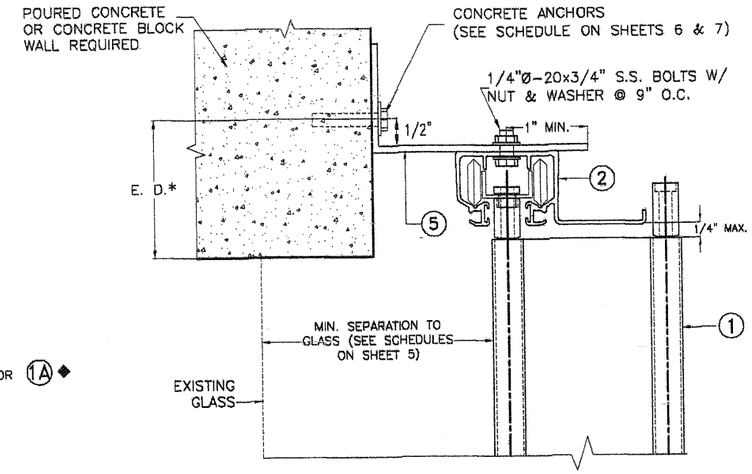

③ WALL MOUNTING INSTALLATION

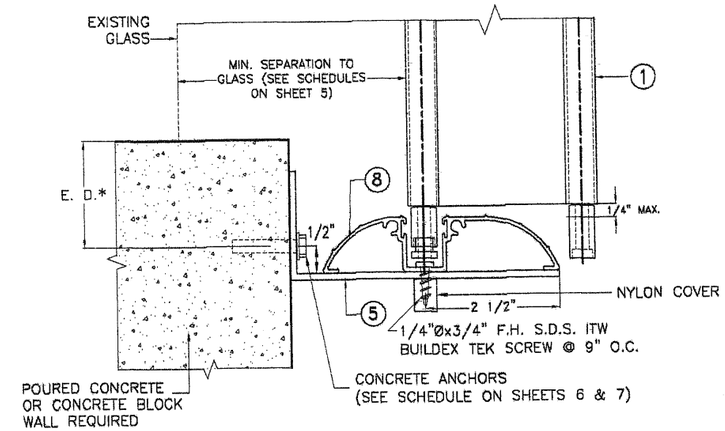

⑤ WALL MOUNTING INSTALLATION

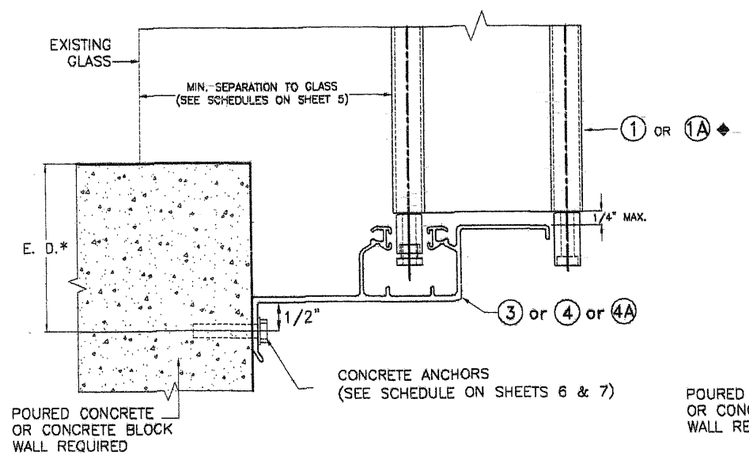

② WALL MOUNTING INSTALLATION

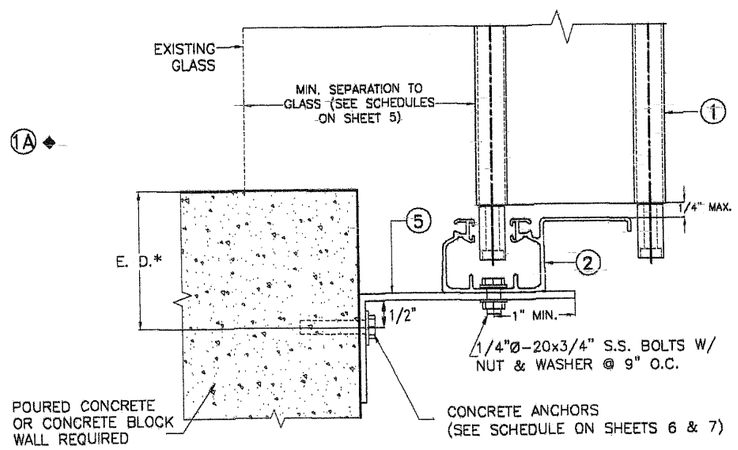

④ WALL MOUNTING INSTALLATION

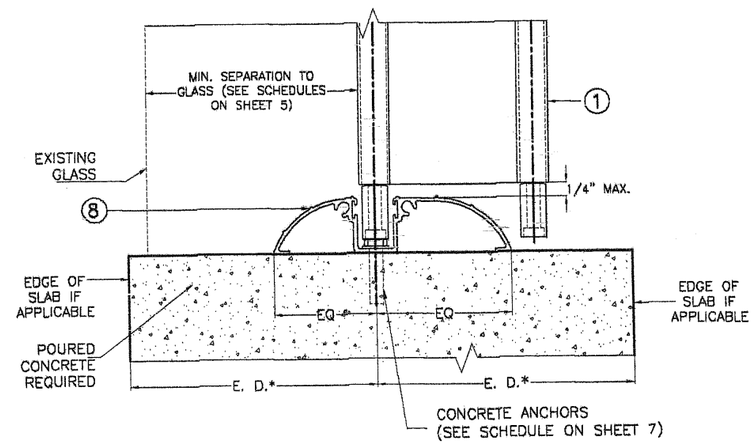

⑥ FLOOR MOUNTING INSTALLATION

NOTE FOR COMBINATION OF SECTIONS:

1- SEE SHEET 3 FOR TYPICAL SHUTTER ASSEMBLY
2- MOUNTING SECTIONS CAN BE COMBINED IN ANY WAY TO SUIT ANY INSTALLATION.

* E.D. = EDGE DISTANCE (SEE NOTES & SCHEDULE ON SHEET 7)

◆ SEE LIMITATIONS OF USE FOR BLADE 1A ON SHEET 18.

INSTALLATION DETAILS

SCALE 3/8"=1"

FLORIDA BUILDING CODE (High Velocity Hurricane Zone)

WALTER A. TILLIT JR. LICENSE No. 44167 STATE OF FLORIDA PROFESSIONAL ENGINEER

P.E. SEAL/SIGNATURE/DATE

TILTECO INC.
TILLIT TESTING & ENGINEERING COMPANY
6355 N.W. 36th. St., Ste. 305, VIRGINIA GARDENS, FLORIDA 33166
Phone : (305)871-1530 . Fax : (305)871-1531
e-mail: tilteco@aol.com
EB-0006719
WALTER A. TILLIT Jr. P.E.
FLORIDA Lic. # 44167

A.S.S.A.
American Shutter Systems Association, Inc.
4268 Westroads Drive
West Palm Beach, FL 33407

© 2011 EASTERN METAL SUPPLY, INC.

BERTHA HV™
Accordion Shutter System
H.V. BLADE #3 W/ OR W/O H.V. WINDOW BLADE #3

REV. No	DESCRIPTION	DATE	DRAWN BY: R.E./A.G.
1	OLD 11-072	11/28/11	DATE: 11/28/11
2			DRAWING No
3			11-191
4			
5			SHEET
6			9 OF 18

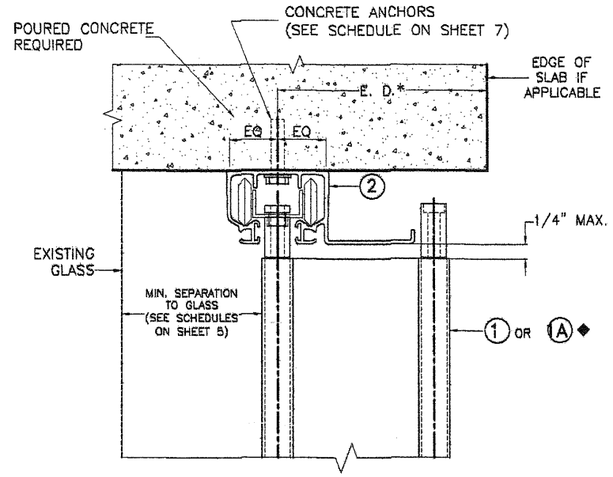

⑦ CEILING MOUNTING INSTALLATION

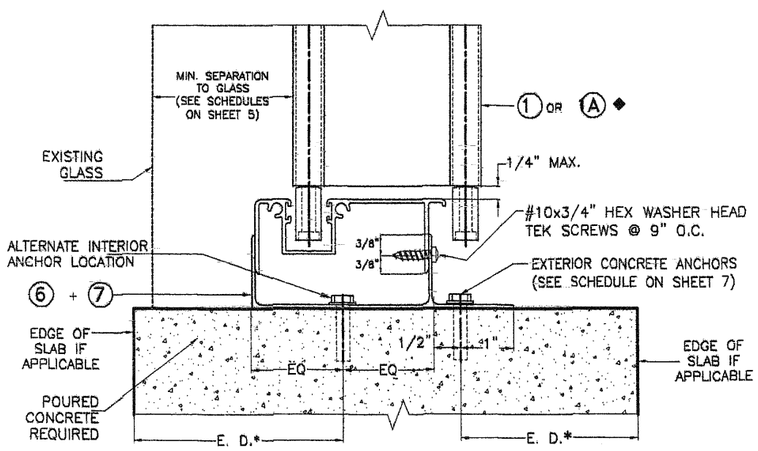

⑧ FLOOR MOUNTING INSTALLATION Ω

Ω NOTE: THIS INSTALLATION SHALL BE REMOVABLE WHEN PERFORMED ADJACENT TO AN OPERABLE EXIT OR ENTRANCE

* E.D. = EDGE DISTANCE (SEE NOTES & SCHEDULE ON SHEET 7)

NOTE FOR COMBINATION OF SECTIONS:

1- SEE SHEET 3 FOR TYPICAL SHUTTER ASSEMBLY
2- MOUNTING SECTIONS CAN BE COMBINED IN ANY WAY TO SUIT ANY INSTALLATION.

◆ SEE LIMITATIONS OF USE FOR BLADE 1A ON SHEET 18.

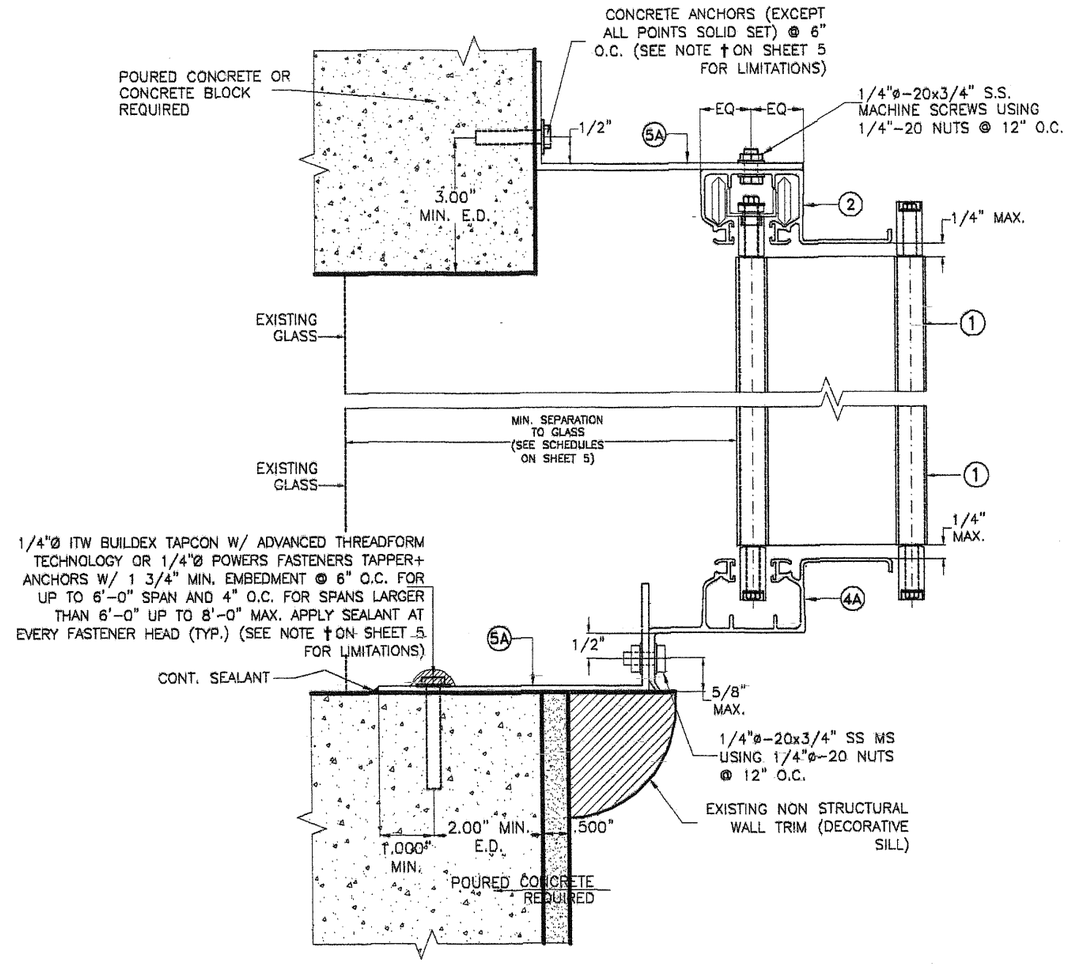

⑨ KEYSTONE MOUNTING INSTALLATION

MAXIMUM A.S.D. DESIGN PRESSURE: +64,-72 psf
MAXIMUM SHUTTER SPAN 8'-0"

INSTALLATION DETAILS (CONTINUED)

SCALE 3/8"=1"

FLORIDA BUILDING CODE (**H**igh **V**elocity **H**urricane **Z**one)

WALTER A. TILLIT JR. LICENSE No. 44167 STATE OF FLORIDA PROFESSIONAL ENGINEER

P.E. SEAL/SIGNATURE/DATE

TILTECO INC.
TILLIT TESTING & ENGINEERING COMPANY
6355 N.W. 36th. St., Ste. 305, VIRGINIA GARDENS, FLORIDA 33166
Phone : (305)871-1530 . Fax : (305)871-1531
e-mail: tilteco@aol.com
EB-0006719
WALTER A. TILLIT Jr. P.E.
FLORIDA Lic. # 44167

A.S.S.A.
American Shutter Systems Association, Inc.
4268 Westroads Drive
West Palm Beach, FL 33407

© 2011 EASTERN METAL SUPPLY, INC.

BERTHA HV™
Accordion Shutter System
H.V. BLADE #3 W/ OR W/O H.V. WINDOW BLADE #3

REV. No	DESCRIPTION	DATE	DRAWN BY: R.E./A.G.
1	OLD 11-072	11/28/11	DATE: 11/28/11
2			DRAWING No
3			11-191
4			
5			SHEET
6			10 OF 18

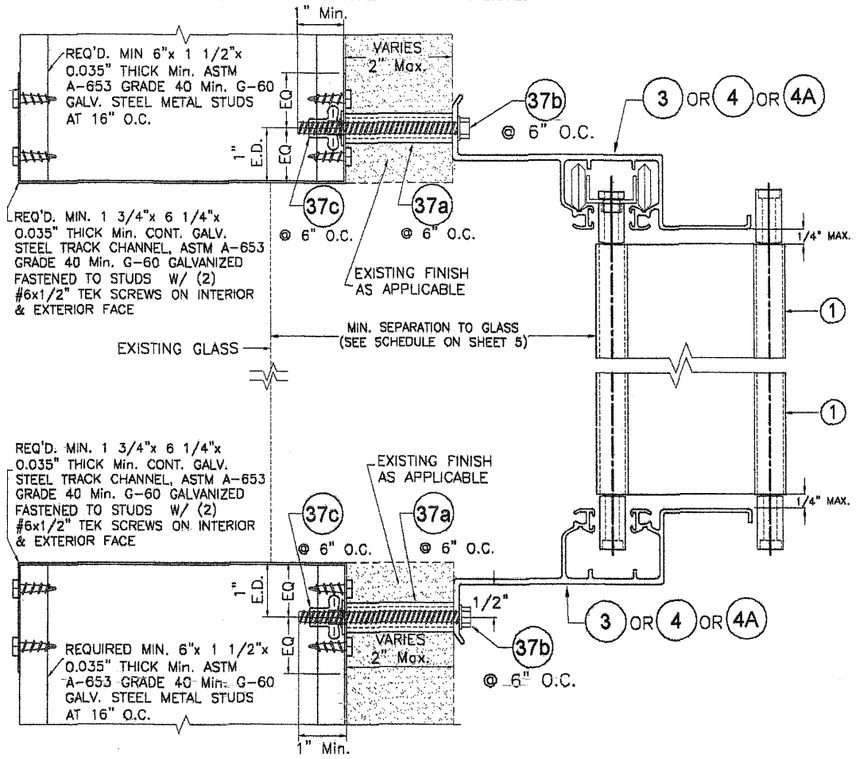

10 B.O. WALL MOUNTING INSTALLATION

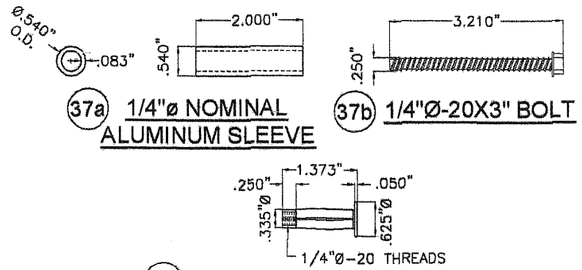

INSTALLATION DETAILS (CONTINUED)

SCALE 3/8"=1"

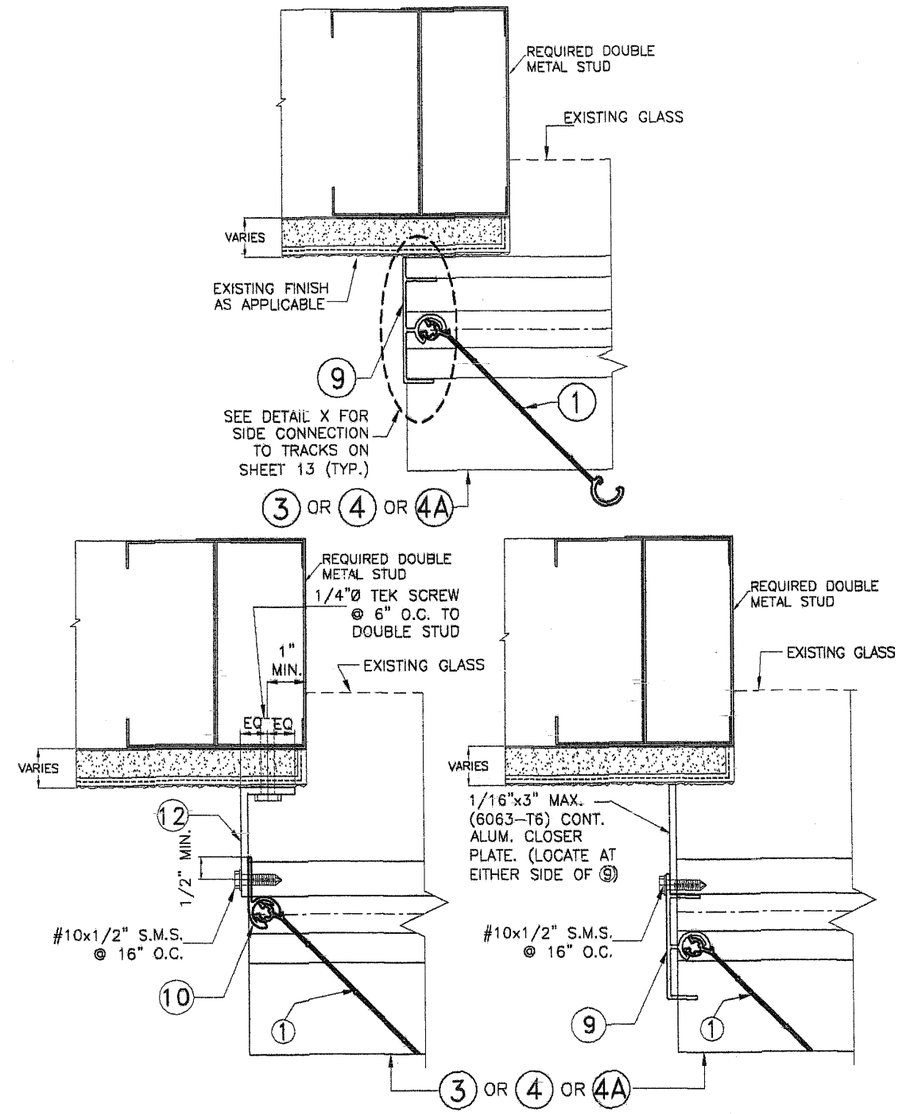

END INSTALLATION INTO METAL STUD WALL

SCALE 3/8"=1"

FLORIDA BUILDING CODE (**H**igh **V**elocity **H**urricane **Z**one)

WALTER A. TILLIT JR. LICENSE No. 44167 STATE OF FLORIDA PROFESSIONAL ENGINEER

P.E. SEAL/SIGNATURE/DATE

TILTECO INC.

TILLIT TESTING & ENGINEERING COMPANY
6355 N.W. 36th. St., Ste. 305, VIRGINIA GARDENS, FLORIDA 33166
Phone : (305)871-1530 . Fax : (305)871-1531
e-mail: tilteco@aol.com
EB-0006719
WALTER A. TILLIT Jr. P.E.
FLORIDA Lic. # 44167

A.S.S.A.
American Shutter Systems Association, Inc.
4268 Westroads Drive
West Palm Beach, FL 33407

© 2011 EASTERN METAL SUPPLY, INC.

BERTHA HV™
Accordion Shutter System
H.V. BLADE #3 W/ OR W/O H.V. WINDOW BLADE #3

REV. No	DESCRIPTION	DATE	DRAWN BY: R.E./A.G.
1	OLD 11-072	11/28/11	DATE: 11/28/11
2			DRAWING No
3			11-191
4			
5			SHEET
6			10A OF 18

INSTALLATION WITH (1) OR (1A)◆ HV BLADE W/ HV CENTERMATES (13) & (14)

SCALE 3/8"=1"

* SEE NOTES ON HV LOCK (15) AND ALTERNATE LOCKS (16) OR (17) ON SHEET 4.

◆ SEE LIMITATIONS OF USE FOR BLADE (1A) ON SHEET 18.

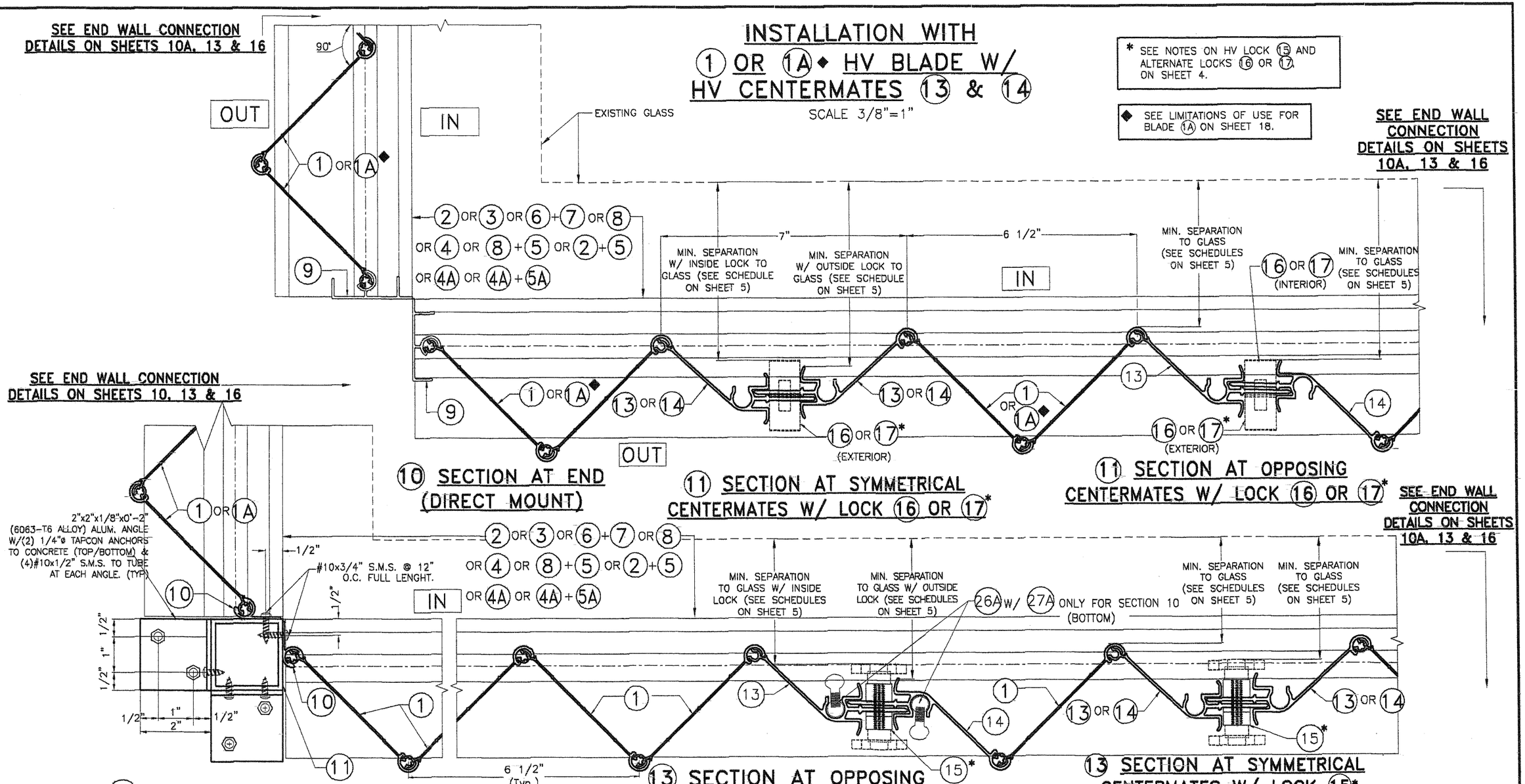

(10) SECTION AT END (DIRECT MOUNT)

(11) SECTION AT SYMMETRICAL CENTERMATES W/ LOCK (16) OR (17)*

(11) SECTION AT OPPOSING CENTERMATES W/ LOCK (16) OR (17)*

(12) SECTION AT CORNER POST

(13) SECTION AT OPPOSING CENTERMATES W/ LOCK (15)*

(13) SECTION AT SYMMETRICAL CENTERMATES W/ LOCK (15)*

FLORIDA BUILDING CODE (High Velocity Hurricane Zone)

WALTER A. TILLIT JR. LICENSE No. 44167 STATE OF FLORIDA PROFESSIONAL ENGINEER

P.E. SEAL/SIGNATURE/DATE

TILTECO INC.

TILLIT TESTING & ENGINEERING COMPANY
6355 N.W. 36th. St., Ste. 305, VIRGINIA GARDENS, FLORIDA 33166
Phone : (305)871-1530 . Fax : (305)871-1531
e-mail: tilteco@aol.com
EB-0006719
WALTER A. TILLIT Jr. P.E.
FLORIDA Lic. # 44167

A.S.S.A.
American Shutter Systems Association, Inc.
4268 Westroads Drive
West Palm Beach, FL 33407

© 2011 EASTERN METAL SUPPLY, INC.

BERTHA HV™
Accordion Shutter System
H.V. BLADE #3 W/ OR W/O H.V. WINDOW BLADE #3

REV. No	DESCRIPTION	DATE	DRAWN BY: R.E./A.G.
1	OLD 11-072	11/28/11	DATE: 11/28/11
2			DRAWING No
3			11-191
4			
5			SHEET
6			11 OF 18

INSTALLATION WITH ① HV BLADE W/ HV "T" LOCK CENTERMATES ⑱ & ⑲

SCALE 3/8"=1"

† SERIES 9444 ALUMINUM (2024-T3 ALLOY) LARGE FLANGE THIN SHEET NUTSERT, PART # 0820, AS MANUFACTURED BY AVDEL CHERRY TEXTORN, PARSIPPENY, NEW JERSEY 07054 OR EQUAL.

* SEE NOTES ON HV "T" LOCKS ㉑ ON SHEET 4.

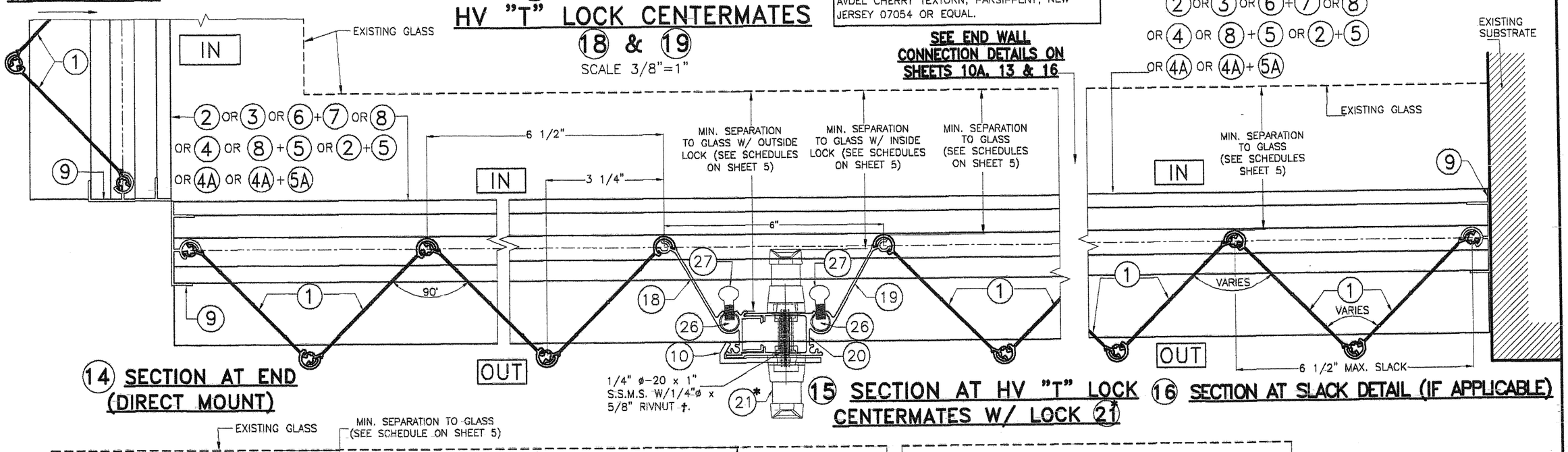

⑭ SECTION AT END (DIRECT MOUNT)

⑮ SECTION AT HV "T" LOCK CENTERMATES W/ LOCK ㉑

⑯ SECTION AT SLACK DETAIL (IF APPLICABLE)

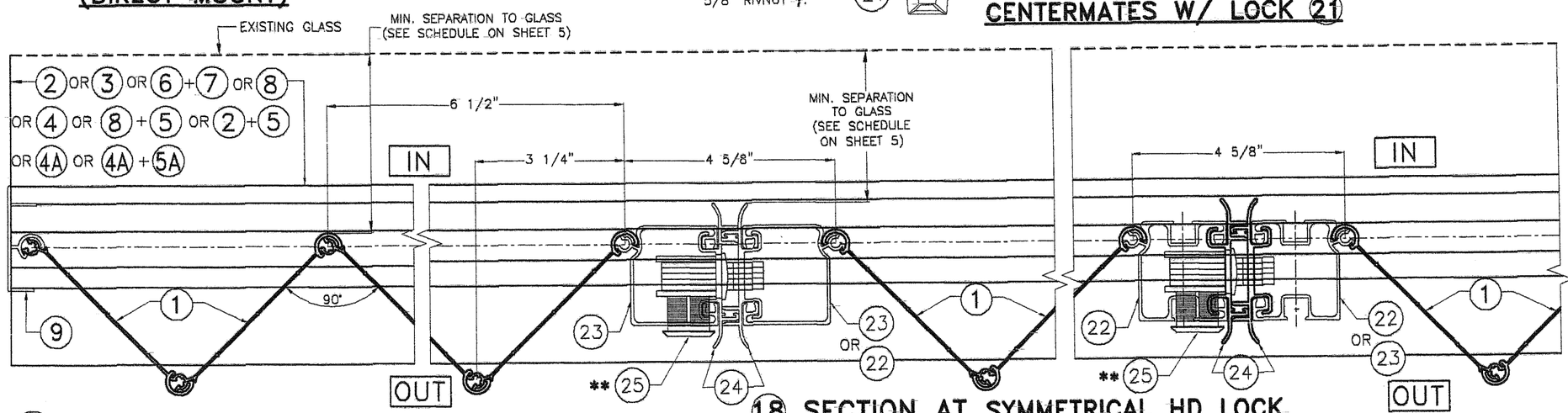

⑰ SECTION AT END (DIRECT MOUNT)

⑱ SECTION AT SYMMETRICAL HD LOCK CENTERMATES W/ HD LOCK ㉕

INSTALLATION WITH ① HV BLADE W/ HD CENTERMATES ㉒, ㉓, ㉔

SCALE 3/8"=1"

**SEE NOTES ON HD LOCKS ㉕ ON SHEET 4.

FLORIDA BUILDING CODE (**H**igh **V**elocity **H**urricane **Z**one)

WALTER A. TILLIT JR. LICENSE No. 44167 STATE OF FLORIDA PROFESSIONAL ENGINEER

P.E. SEAL/SIGNATURE/DATE

TILTECO INC.

TILLIT TESTING & ENGINEERING COMPANY
6355 N.W. 36th. St., Ste. 305, VIRGINIA GARDENS, FLORIDA 33166
Phone : (305)871-1530 . Fax : (305)871-1531
e-mail: tilteco@aol.com
EB-0006719
WALTER A. TILLIT Jr. P.E.
FLORIDA Lic. # 44167

A.S.S.A.
American Shutter Systems Association, Inc.
4268 Westroads Drive
West Palm Beach, FL 33407

© 2011 EASTERN METAL SUPPLY, INC.

BERTHA HV™
Accordion Shutter System
H.V. BLADE #3 W/ OR W/O H.V. WINDOW BLADE #3

REV. No	DESCRIPTION	DATE	DRAWN BY: R.E./A.G.
1	OLD 11-072	11/28/11	DATE: 11/28/11
2			DRAWING No
3			11-191
4			
5			SHEET
6			12 OF 18

END INSTALLATION INTO CONCRETE OR CONCRETE BLOCK WALL◆

SCALE 3/8"=1"

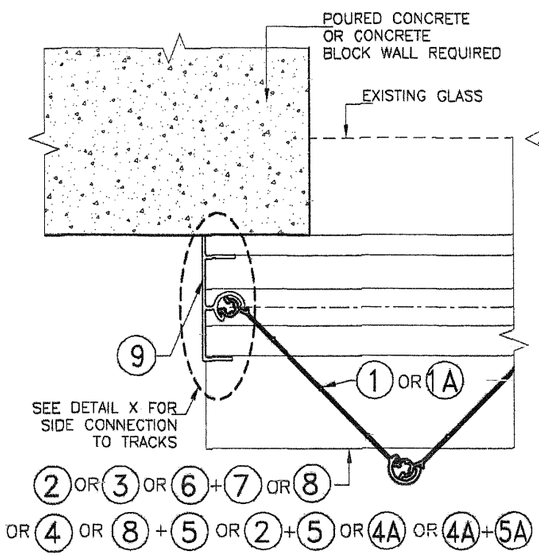

① END CONNECTION DETAIL

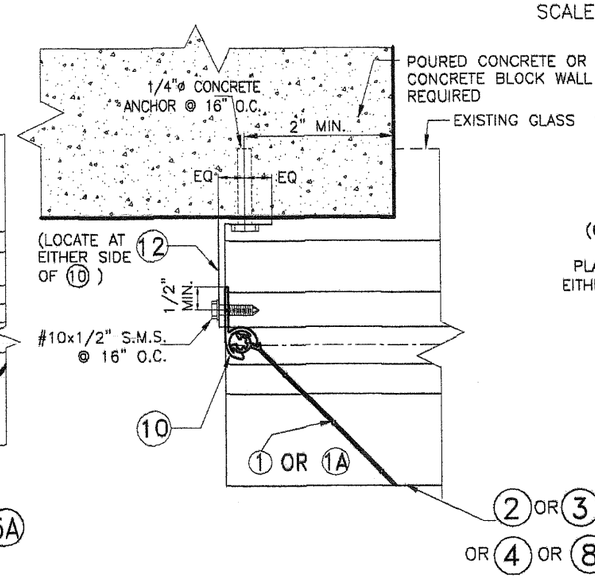

② END CONNECTION DETAIL

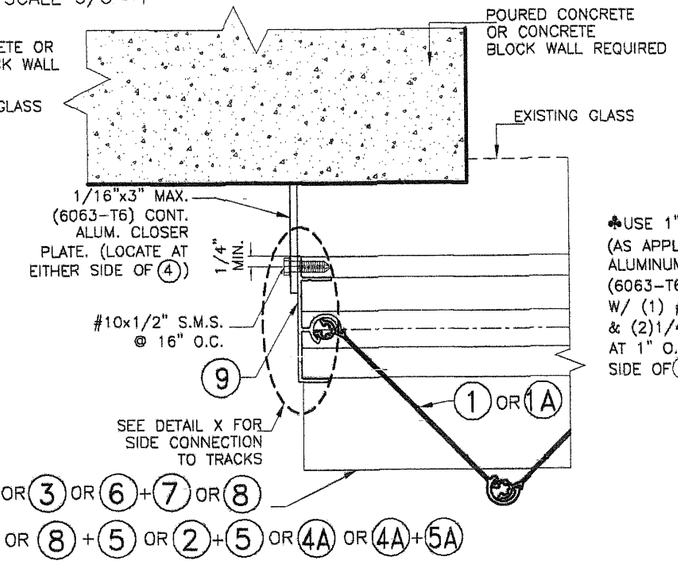

③ END CONNECTION DETAIL

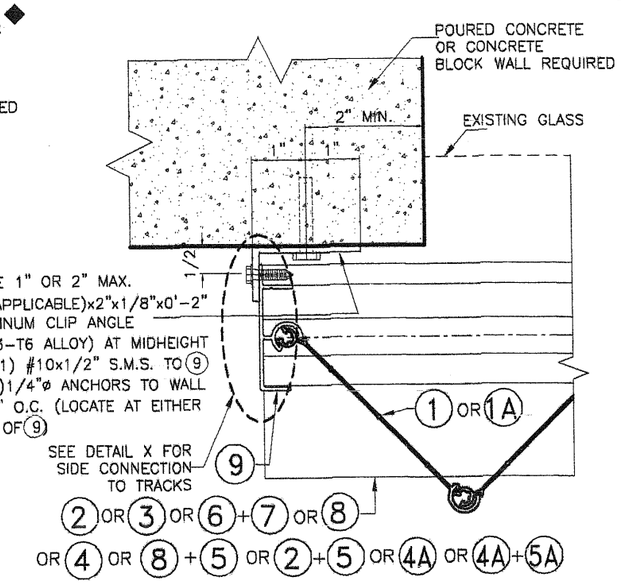

④ END CONNECTION DETAIL

♣ REQUIRED ONLY FOR SPANS GREATER THAN 12'-0"

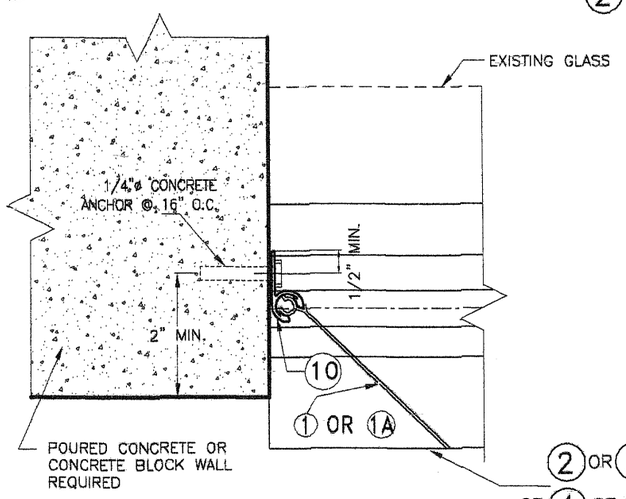

⑤ END CONNECTION DETAIL

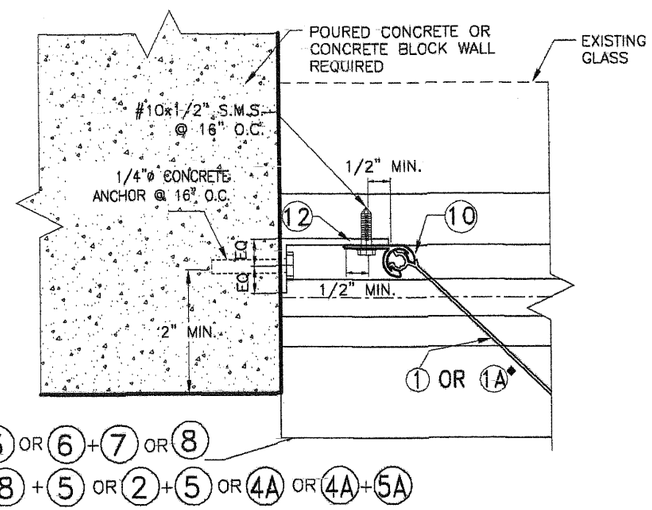

⑥ END CONNECTION DETAIL

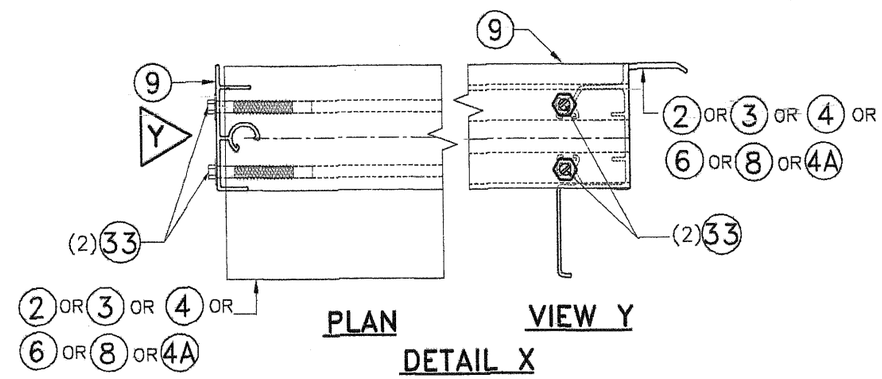

◆ SEE LIMITATIONS OF USE FOR BLADE 1A ON SHEET 18.

FLORIDA BUILDING CODE (**H**igh **V**elocity **H**urricane **Z**one)

WALTER A. TILLIT JR. LICENSE No. 44167 STATE OF FLORIDA PROFESSIONAL ENGINEER

P.E. SEAL/SIGNATURE/DATE

TILTECO INC.
TILLIT TESTING & ENGINEERING COMPANY
6355 N.W. 36th. St., Ste. 305, VIRGINIA GARDENS, FLORIDA 33166
Phone : (305)871-1530 . Fax : (305)871-1531
e-mail: tilteco@aol.com
EB-0006719
WALTER A. TILLIT Jr. P.E.
FLORIDA Lic. # 44167

A.S.S.A.
American Shutter Systems Association, Inc.
4268 Westroads Drive
West Palm Beach, FL 33407

© 2011 EASTERN METAL SUPPLY, INC.

BERTHA HV™
Accordion Shutter System
H.V. BLADE #3 W/ OR W/O H.V. WINDOW BLADE #3

REV. No	DESCRIPTION	DATE	DRAWN BY: R.E./A.G.
1	OLD 11-072	11/28/11	DATE: 11/28/11
2			DRAWING No
3			11-191
4			
5			SHEET
6			13 OF 18

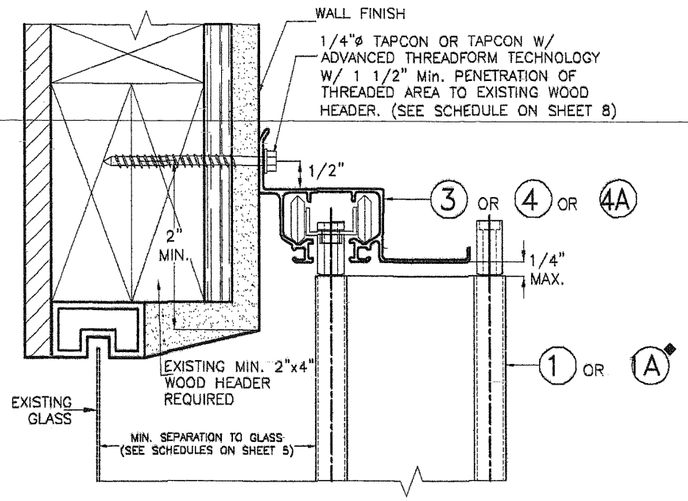

1W WALL CONNECTION AT TOP

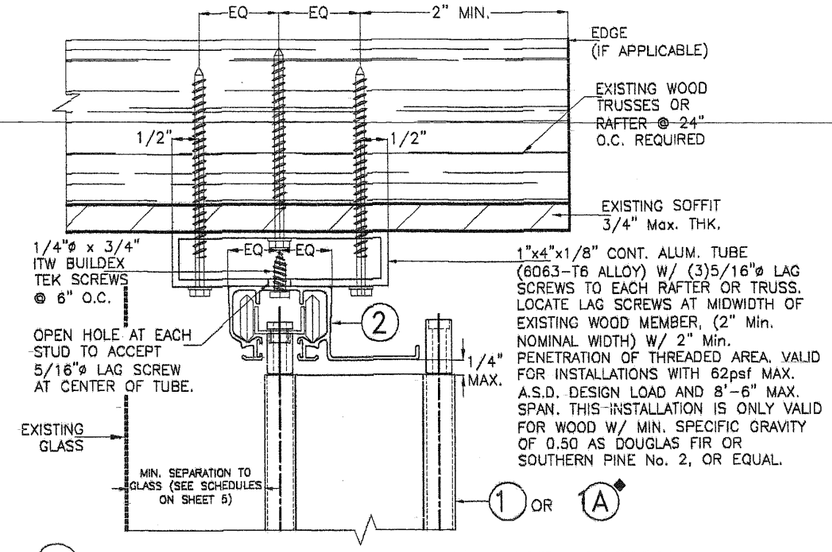

2W HOLLOW CEILING MOUNTING INSTALLATION

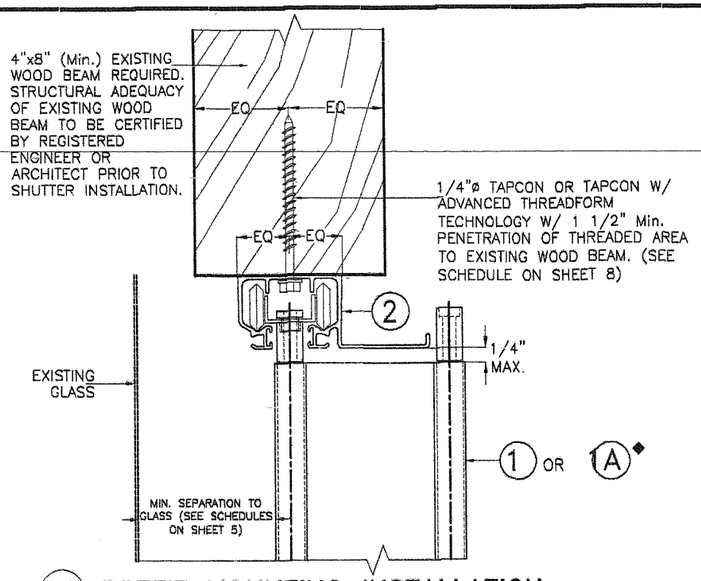

3W SOFFIT MOUNTING INSTALLATION

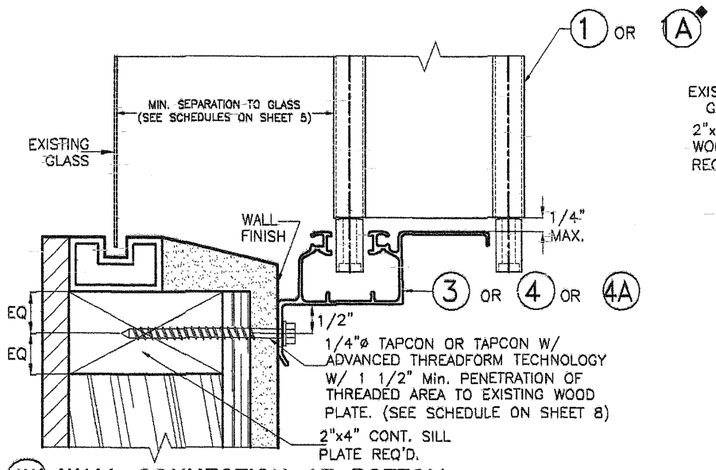

4W WALL CONNECTION AT BOTTOM

NOTE:
1-SEE SHEET 3 FOR TYPICAL SHUTTER ASSEMBLY

2-MOUNTING SECTIONS CAN BE COMBINED IN ANY WAY TO SUIT ANY INSTALLATION.

◆SEE LIMITATIONS OF USE FOR BLADE 1A ON SHEET 18.

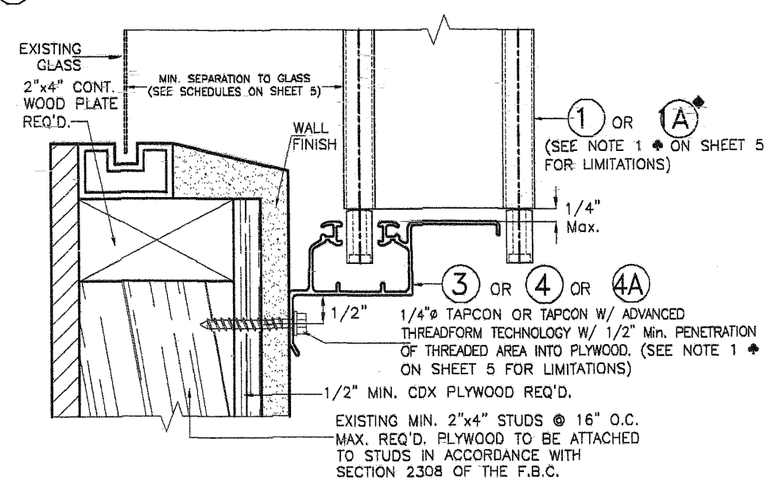

5W WALL CONNECTION AT BOTTOM

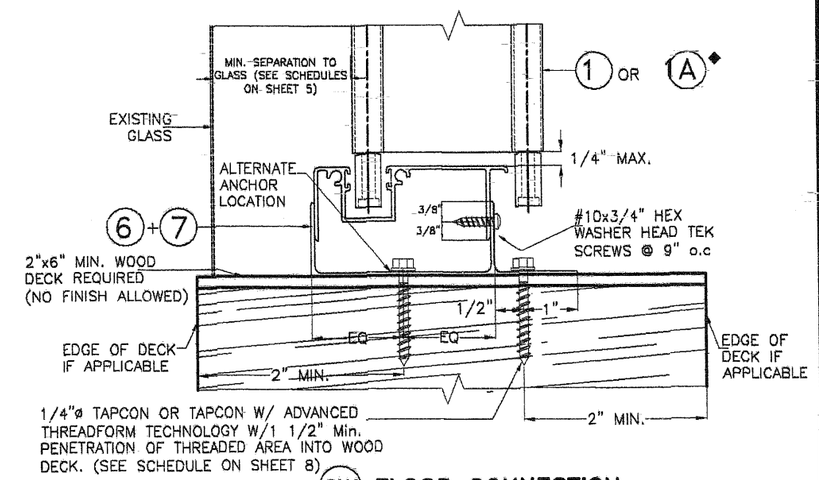

6W FLOOR CONNECTION

INSTALLATION DETAILS ON EXISTING WOOD BUILDINGS

SCALE 3/8"=1"

FLORIDA BUILDING CODE (**H**igh **V**elocity **H**urricane **Z**one)

WALTER A. TILLIT JR. LICENSE No. 44167 STATE OF FLORIDA PROFESSIONAL ENGINEER

P.E. SEAL/SIGNATURE/DATE

TILTECO INC.

TILLIT TESTING & ENGINEERING COMPANY
6355 N.W. 36th. St., Ste. 305, VIRGINIA GARDENS, FLORIDA 33166
Phone : (305)871-1530 . Fax : (305)871-1531
e-mail: tilteco@aol.com
EB-0006719
WALTER A. TILLIT Jr. P.E.
FLORIDA Lic. # 44167

A.S.S.A.
American Shutter Systems Association, Inc.
4268 Westroads Drive
West Palm Beach, FL 33407

© 2011 EASTERN METAL SUPPLY, INC.

BERTHA HV™
Accordion Shutter System
H.V. BLADE #3 W/ OR W/O H.V. WINDOW BLADE #3

REV. No	DESCRIPTION	DATE	DRAWN BY: R.E./A.G.
1	OLD 11-072	11/28/11	DATE: 11/28/11
2			DRAWING No
3			11-191
4			
5			SHEET
6			14 OF 18

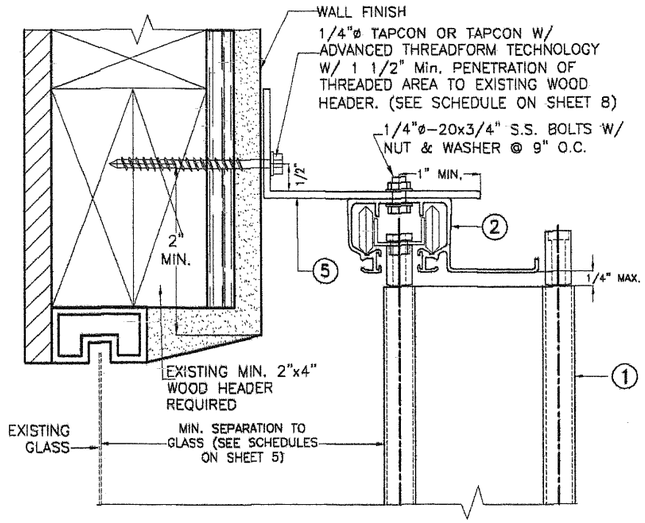

7W WALL MOUNTING INSTALLATION

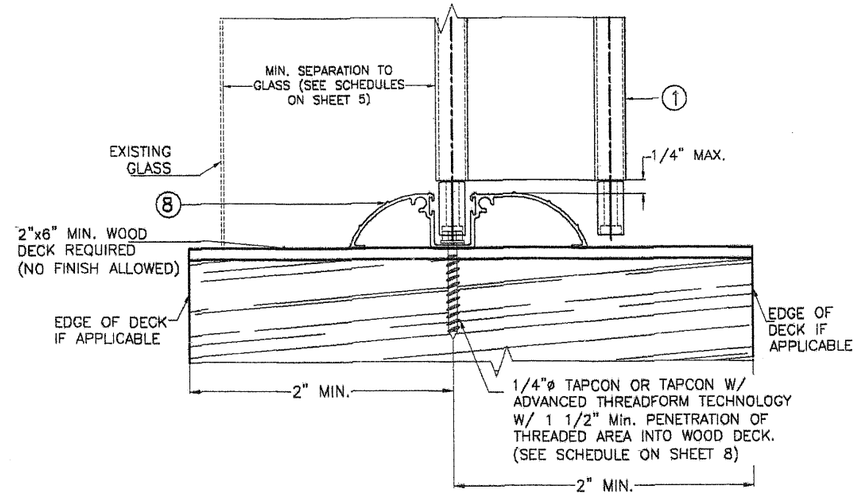

8W FLOOR CONNECTION

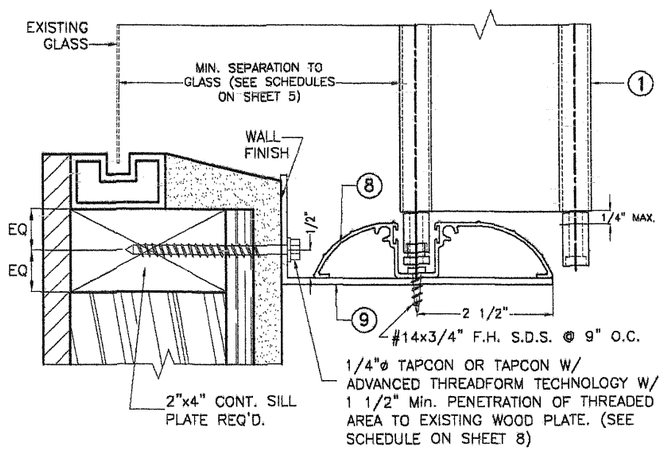

9W WALL MOUNTING INSTALLATION

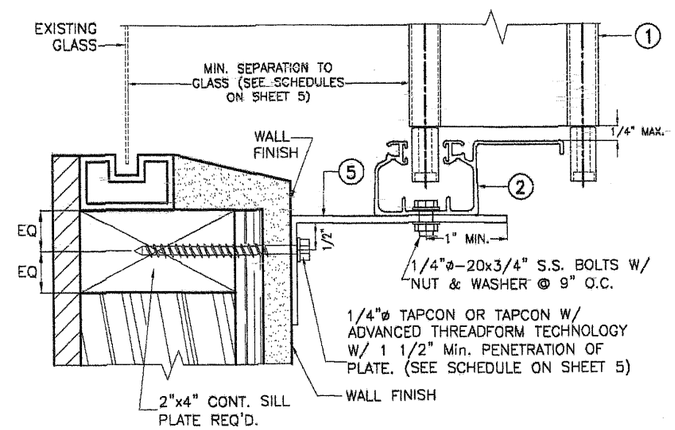

10W WALL MOUNTING INSTALLATION

NOTE:
1-SEE SHEET 3 FOR TYPICAL SHUTTER ASSEMBLY

2-MOUNTING SECTIONS CAN BE COMBINED IN ANY WAY TO SUIT ANY INSTALLATION.

INSTALLATION DETAILS ON EXISTING WOOD BUILDINGS

SCALE 3/8"=1"

FLORIDA BUILDING CODE (**H**igh **V**elocity **H**urricane **Z**one)

WALTER A. TILLIT JR. LICENSE No. 44167 STATE OF FLORIDA PROFESSIONAL ENGINEER

P.E. SEAL/SIGNATURE/DATE

TILTECO INC.
TILLIT TESTING & ENGINEERING COMPANY
6355 N.W. 36th. St., Ste. 305, VIRGINIA GARDENS, FLORIDA 33166
Phone : (305)871-1530 . Fax : (305)871-1531
e-mail: tilteco@aol.com
EB-0006719
WALTER A. TILLIT Jr. P.E.
FLORIDA Lic. # 44167

A.S.S.A.
American Shutter Systems Association, Inc.
4268 Westroads Drive
West Palm Beach, FL 33407

© 2011 EASTERN METAL SUPPLY, INC.

BERTHA HV™
Accordion Shutter System
H.V. BLADE #3 W/ OR W/O H.V. WINDOW BLADE #3

REV. No	DESCRIPTION	DATE	DRAWN BY: R.E./A.G.
1	OLD 11-072	11/28/11	DATE: 11/28/11
2			DRAWING No
3			11-191
4			
5			SHEET
6			15 OF 18

END INSTALLATION INTO 2"x4" MIN. WOOD STUDS ◆

SCALE 3/8"=1"

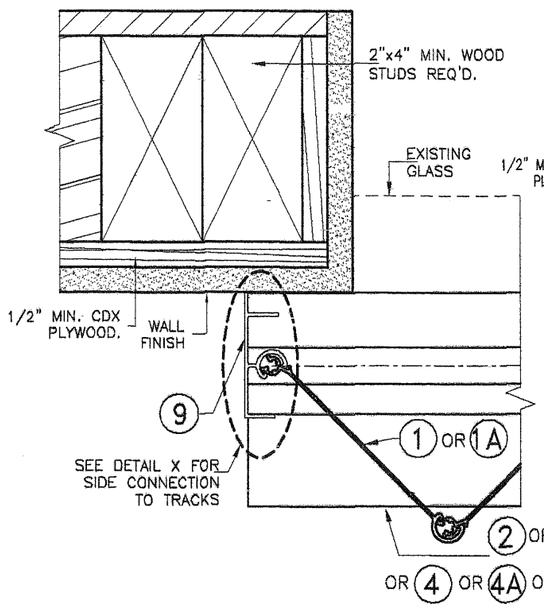

1 END CONNECTION DETAIL

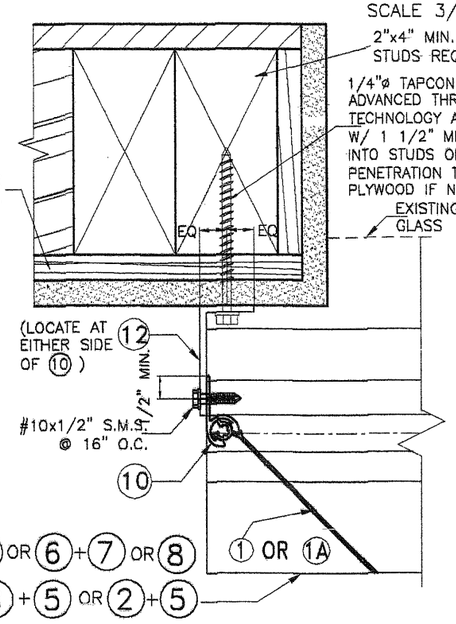

2 END CONNECTION DETAIL

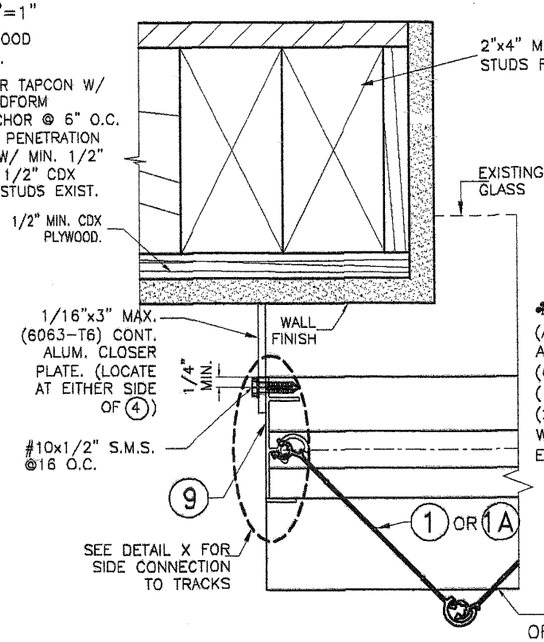

3 END CONNECTION DETAIL

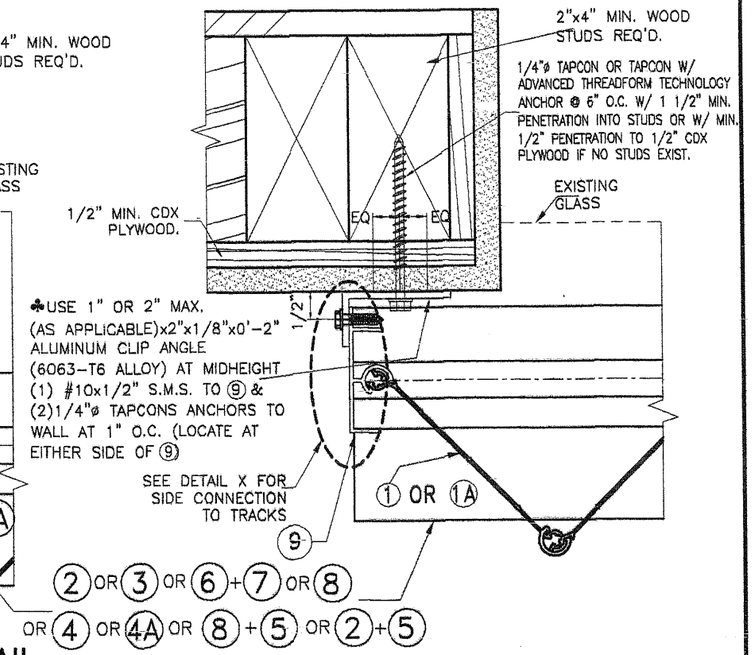

4 END CONNECTION DETAIL

♣ REQUIRED ONLY FOR SPANS GREATER THAN 12'-0"

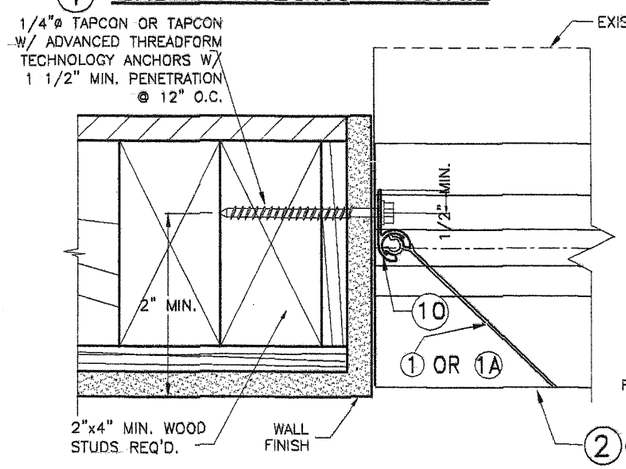

5 END CONNECTION DETAIL

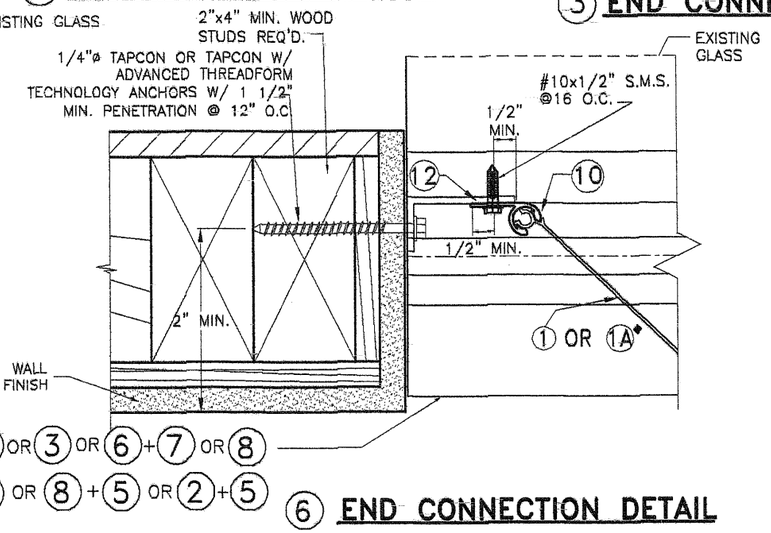

6 END CONNECTION DETAIL

◆ SEE LIMITATIONS OF USE FOR BLADE 1A ON SHEET 18.

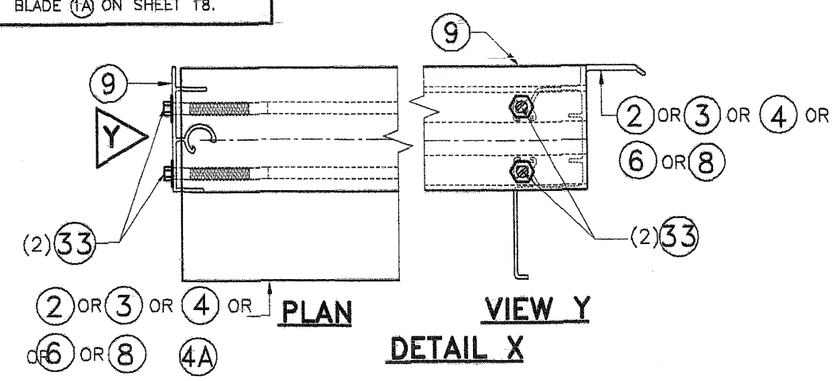

FLORIDA BUILDING CODE (**H**igh **V**elocity **H**urricane **Z**one)

WALTER A. TILLIT JR. LICENSE No. 44167 STATE OF FLORIDA PROFESSIONAL ENGINEER

P.E. SEAL/SIGNATURE/DATE

TILTECO INC.

TILLIT TESTING & ENGINEERING COMPANY
6355 N.W. 36th. St., Ste. 305, VIRGINIA GARDENS, FLORIDA 33166
Phone : (305)871-1530 . Fax : (305)871-1531
e-mail: tilteco@aol.com
EB-0006719
WALTER A. TILLIT Jr. P.E.
FLORIDA Lic. # 44167

A.S.S.A.
American Shutter Systems Association, Inc.
4268 Westroads Drive
West Palm Beach, FL 33407

© 2011 EASTERN METAL SUPPLY, INC.

BERTHA HV™
Accordion Shutter System
H.V. BLADE #3 W/ OR W/O H.V. WINDOW BLADE #3

REV. No	DESCRIPTION	DATE	DRAWN BY: R.E./A.G.
1	OLD 11-072	11/28/11	DATE: 11/28/11
2			DRAWING No
3			11-191
4			
5			SHEET
6			16 OF 18

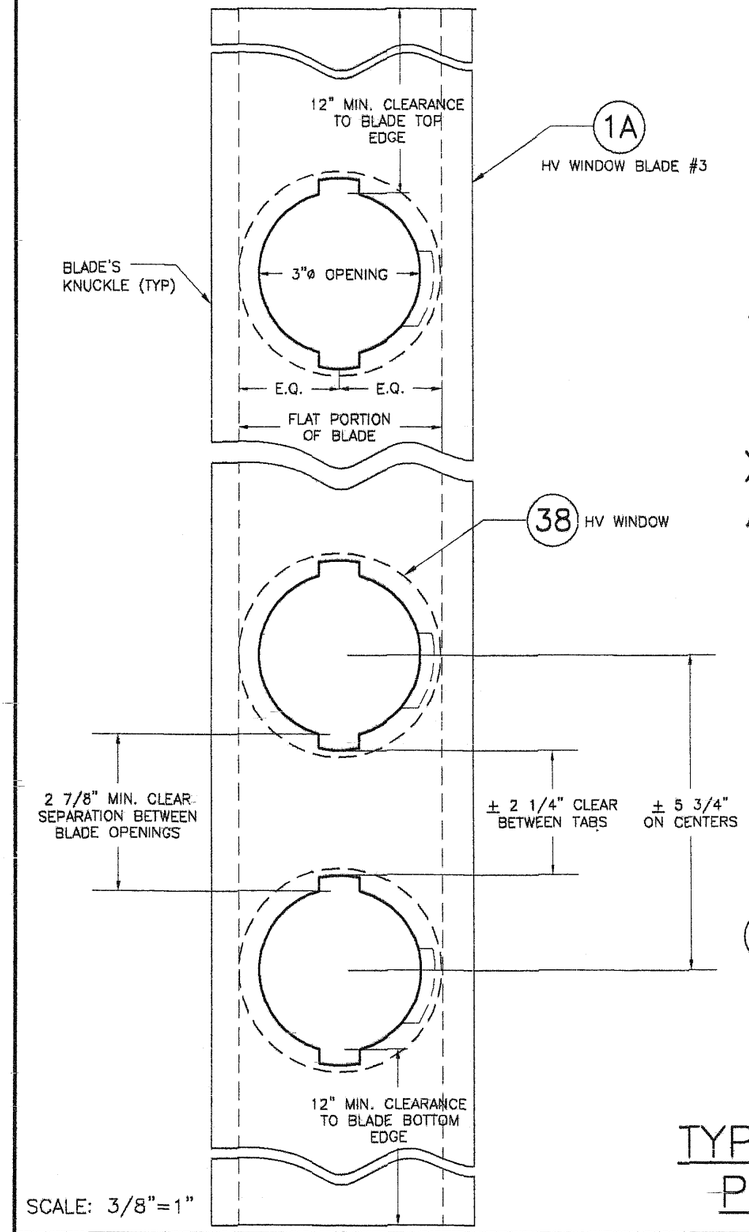

SCALE: 3/8"=1"

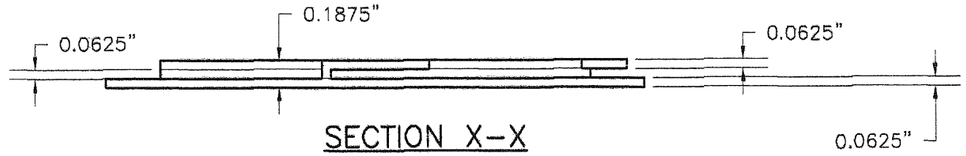

SECTION X–X

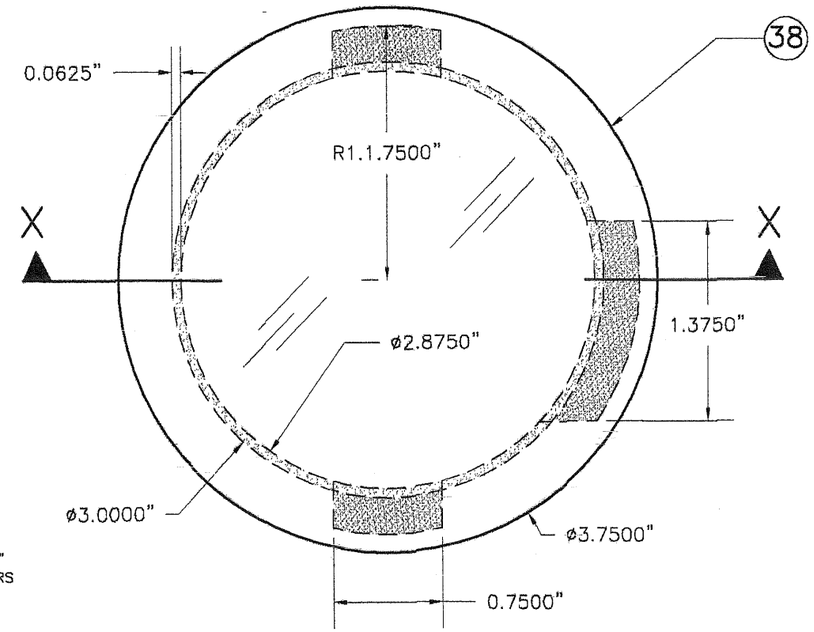

POLYCARBONATE SOURCES FOR 38			
TYPICAL PROPERTIES	APPLICABLE STANDARD REFERENCE	RESULT	
		BAYER MATERIAL/SCIENCE LLC. MAKROLON 3103	SABIC INNOVATIVE PLASTIC LEXAN 103 RESIN
PHYSICAL:			
SPECIFIC GRAVITY	ASTM D792	0.043 lb/in³	0.043 lb/in³
MECHANICAL:			
TENSILE YIELD STRENGTH	ASTM D638	9,400 p.s.i.	9,500 p.s.i.
FLEXURAL STRENGTH AT YIELD	ASTM D790	12,500 p.s.i.	13,400 p.s.i.
FLEXURAL MODULUS	ASTM D790	340,000 p.s.i.	345,000 p.s.i.
IMPACT:			
NOTCHED IZOD	ASTM D256	18 FT–lb/in	17 FT–lb/in
FIRE BURNING CHARACTERISTICS:			
SMOKE DENSITY	ASTM D2843	47.2 %	64.5 % MAX.
RATE OF BURNING	ASTM D635	C–1 CLASS	C–1 CLASS
SELF IGNITION	ASTM D1929	1040 °F	980 °F
WEATHERING:	ASTM G155		
TENSILE STRENGTH AFTER WEATHERING	ASTM 638	9302 p.s.i.	8840 p.s.i.
TENSILE STRESS BEFORE WEATHERING	ASTM 638	8461 p.s.i.	8880 p.s.i.

38 POLYCARBONATE IMPACT RESISTANT HV WINDOW

BAYER MAKROLON 3103 POLYCARBONATE
RESINS, UV–STABILIZED GRADE

EXTERIOR ELEVATION
SCALE: 1" = 1"

TYPICAL 1A HV WINDOW BLADE #3 AND POLYCARBONATE HV WINDOW DETAIL

FLORIDA BUILDING CODE (**H**igh **V**elocity **H**urricane **Z**one)

WALTER A. TILLIT JR. LICENSE No. 44167 STATE OF FLORIDA PROFESSIONAL ENGINEER
P.E. SEAL/SIGNATURE/DATE

TILTECO INC.
TILLIT TESTING & ENGINEERING COMPANY
6355 N.W. 36th. St., Ste. 305, VIRGINIA GARDENS, FLORIDA 33166
Phone : (305)871–1530 . Fax : (305)871–1531
e–mail: tilteco@aol.com
EB–0006719
WALTER A. TILLIT Jr. P.E.
FLORIDA Lic. # 44167

A.S.S.A.
American Shutter Systems Association, Inc.
4268 Westroads Drive
West Palm Beach, FL 33407

© 2011 EASTERN METAL SUPPLY, INC.

BERTHA HV™
Accordion Shutter System
H.V. BLADE #3 W/ OR W/O H.V. WINDOW BLADE #3

REV. No	DESCRIPTION	DATE
1	OLD 11–072	11/28/11
2		
3		
4		
5		
6		

DRAWN BY: R.E./A.G.
DATE: 11/28/11
DRAWING No 11–191
SHEET 17 OF 18

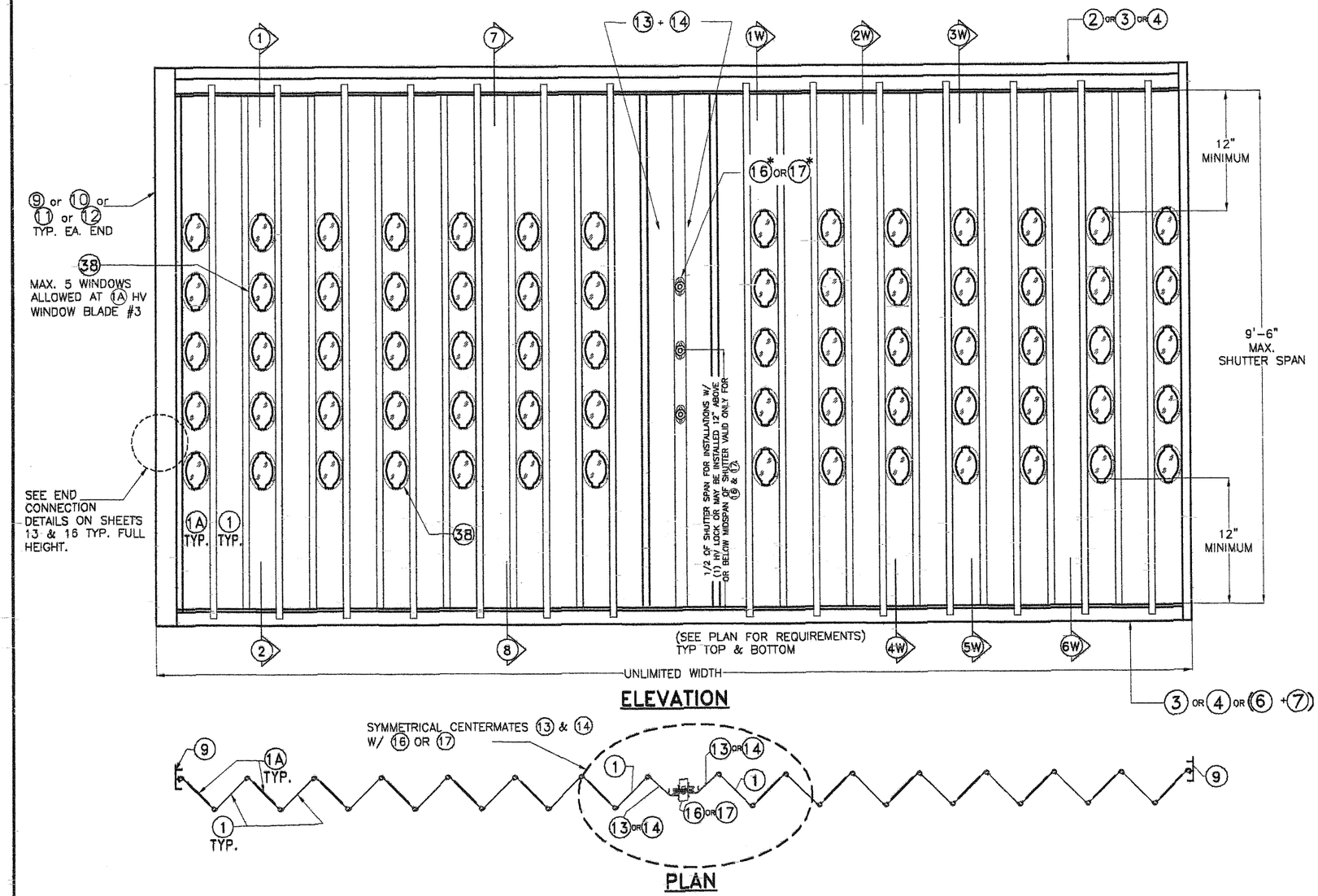

ELEVATION

PLAN

* GENERAL LIMITATIONS AND CONDITIONS OF USE FOR BERTHA 1 HV BLADE #3 ACCORDION SHUTTER SYSTEM WORKING IN UNISON WITH 1A HV WINDOW BLADE #3.

1. MAX. A.S.D. DESIGN PRESSURE RATING: +62, −62 p.s.f.

2. MAX. SHUTTER SPAN: 114" = 9'−6"

3. ALLOWED MOUNTINGS: 1, 2, 7 & 8 ON SHEETS 9 & 10; AS WELL AS MOUNTINGS 1W, 2W, 3W, 4W, 5W & 6W ON SHEET 14.

4. ONLY CENTERMATES 13 14 (BOTH W/ 16 OR 17) ARE ALLOWED WITH 13 14 ARRANGED IN A SYMMETRICAL LAYOUT.

5. (A) 1A HV WINDOW BLADE #3 SHALL ONLY ALLOW A MAXIMUM OF 5 OPENINGS (3"ø HOLES) FOR 38 PER BLADE AT SPACINGS SHOWN ON SHEET 17.

(B) MIN. CLEARANCE FROM TOP OR BOTTOM EDGE OF 1A HV WINDOW BLADE #3 OF ANY 3"ø HOLE FOR 38 SHALL BE 12".

(C) FIRST OR LAST BLADE COMING OUT FROM STARTERS AT ENDS MAY BE 1A HV WINDOW BLADE #3.

(D) 1A HV WINDOW BLADE #3 MUST BE USED ALTERNATE TO A SOLID 1 HV BLADE #3 THROUGHOUT SHUTTER'S WIDTH.

(E) CENTERMATES SHALL ALWAYS BE INSTALLED ADJACENT TO A SOLID 1 HV BLADE #3 AT EITHER SIDE OF THEM.

(F) POLYCARBONATE HV WINDOW 38 SHALL BE INSTALLED SO THAT TABS FACE THE INTERIOR OF THE OPENING BEING PROTECTED. HV WINDOW 38 MUST BE ONLY INSTALLED AND LOCKED USING A HV SETTING TOOL PROVIDED BY ASSA, INC.

6. SEE ANCHOR SPACING SCHEDULE FOR INSTALLATIONS INTO WOOD FRAME BUILDINGS ON SHEET 8, AS LIMITED BY SPAN AND DESIGN LOAD (SEE NOTES 1 & 2 ABOVE).

7. SEE ANCHOR SPACING SCHEDULE FOR INSTALLATIONS INTO POURED CONCRETE OR CONCRETE BLOCK WALL ON SHEETS 6 & 7 AS LIMITED BY SPAN AND DESIGN LOAD (SEE NOTES 1 & 2 ABOVE).

8. SEE MINIMUM SEPARATION TO GLASS ON SHEET 5.

1 TYPICAL HV BLADE #3 WORKING IN UNISON WITH 1A HV WINDOW BLADE #3 SHUTTER*

N.T.S.

FLORIDA BUILDING CODE (**H**igh **V**elocity **H**urricane **Z**one)

WALTER A. TILLIT JR. LICENSE No. 44167 STATE OF FLORIDA PROFESSIONAL ENGINEER

P.E. SEAL/SIGNATURE/DATE

TILTECO INC.

TILLIT TESTING & ENGINEERING COMPANY
6355 N.W. 36th. St., Ste. 305, VIRGINIA GARDENS, FLORIDA 33166
Phone : (305)871-1530 . Fax : (305)871-1531
e-mail: tilteco@aol.com
EB-0006719
WALTER A. TILLIT Jr. P.E.
FLORIDA Lic. # 44167

A.S.S.A.
American Shutter Systems Association, Inc.
4268 Westroads Drive
West Palm Beach, FL 33407

© 2011 EASTERN METAL SUPPLY, INC.

BERTHA HV™
Accordion Shutter System
H.V. BLADE #3 W/ OR W/O H.V. WINDOW BLADE #3

REV. No	DESCRIPTION	DATE
1	OLD 11-072	11/28/11
2		
3		
4		
5		
6		

DRAWN BY: R.E./A.G.
DATE: 11/28/11
DRAWING No 11-191
SHEET 18 OF 18