TABLE OF CONTENTS:

SHEET 1- TABLE OF CONTENTS, GENERAL NOTES, TYPICAL ELEVATION, ALLOWABLE BLADE PRESSURE TABLE 1
SHEET 2- SECTIONS A, B & C1 WITH ANCHORAGE TABLES
SHEET 3- SECTIONS D, E, F & G WITH ANCHORAGE TABLES
SHEET 4- SECTIONS C & G1 WITH ANCHORAGE TABLES
SHEET 5- JAMB SECTIONS J, H, H1 & I
SHEET 6- LOCK SECTION L, MALE & FEMALE STACK
SHEET 7- LOCK SECTION L1, UNIMATE STACK
SHEET 8- BILL OF MATERIALS, ANCHOR SCHEDULE & BLADE ASSEMBLY.
SHEET 9- COMPONENTS

GENERAL NOTES: (FLORIDA BUILDING CODE 2010)

1- DEFINITION: THIS PRODUCT IS AN ACCORDION TYPE SHUTTER; DESIGNED, CONSTRUCTED AND ERECTED TO EASILY ENCLOSE AN AREA, PROVIDING PROTECTION FROM HURRICANE FORCE WINDS AND WIND BORNE DEBRIS (LARGE & SMALL MISSILE) WITHIN THE ALLOWABLE DESIGNED PRESSURES AND LIMITATIONS STATED IN THIS APPROVAL.

2- CODE: THIS PRODUCT HAS BEEN TESTED AND DESIGNED IN ACCORDANCE WITH THE 2010 FLORIDA BUILDING CODE UNDER TAS 201, 202 AND 203.

3- POSTING: A PERMANENT LEGIBLE DECAL SHALL BE PLACED AT BOTTOM OF THE LOCKING BAR OR CENTER MATE FACING THE EXTERIOR OR OUTSIDE AS PER FLORIDA BUILDING CODE SECTION 1715. 8. 3. 1

4- LOADS: DESIGNED LOAD CALCULATED BASED ON THE ASCE 7 AND PROVIDED BY A PROFESSIONAL ARCHITECT OR ENGINEER FOR EACH SPECIFIC PROJECT. THE CALCULATED DESIGNED PRESSURE MUST NOT EXCEED THE ALLOWABLE PRESSURES FOR EACH SHUTTER COMPONENT TO BE USED.

5- MATERIAL: ALL EXTRUDED ALUMINUM SHAPES SHALL BE MADE of 6063-T6 OR AS NOTED.

6- FASTENERS: ASSEMBLY SCREWS AND ANCHORS SHALL BE AS SPECIFIED IN THE CURRENT SET OF DRAWINGS. INSTALLATION AND LOADS AS PER THIS APPROVAL.

7- USE: IT SHALL BE THE RESPONSIBILITY OF THE CONTRACTOR, ARCHITECT OR ENGINEER OF RECORD TO VERIFY THE FOLLOWING:
7. 1- THE STABILITY OF THE STRUCTURE WHERE THE SHUTTER IS TO BE ATTACHED INSURING PROPER ANCHORAGE.
7. 2- THE SITE SPECIFIC PROJECT CRITERIA, SUCH AS BUT NOT LIMITED TO, WINDLOADS, LOCAL CODE REQUIREMENTS, DESIGNED PRESSURES ETC.
7. 3- THAT THIS APPROVAL IS ADEQUATE TO THE SPECIFIC PROJECT.

8- 33 1/3% INCREASE IN ALLOWABLE LOADS HAVE NOT BEEN USED IN THE DESIGN OF THE ANCHORS FOR THIS PRODUCT APPROVAL. HOWEVER, WOOD ANCHORS WITH 1. 6 LOAD DURATION INCREASE FOR WIND LOAD HAVE BEEN USED.

TYPICAL ELEVATION

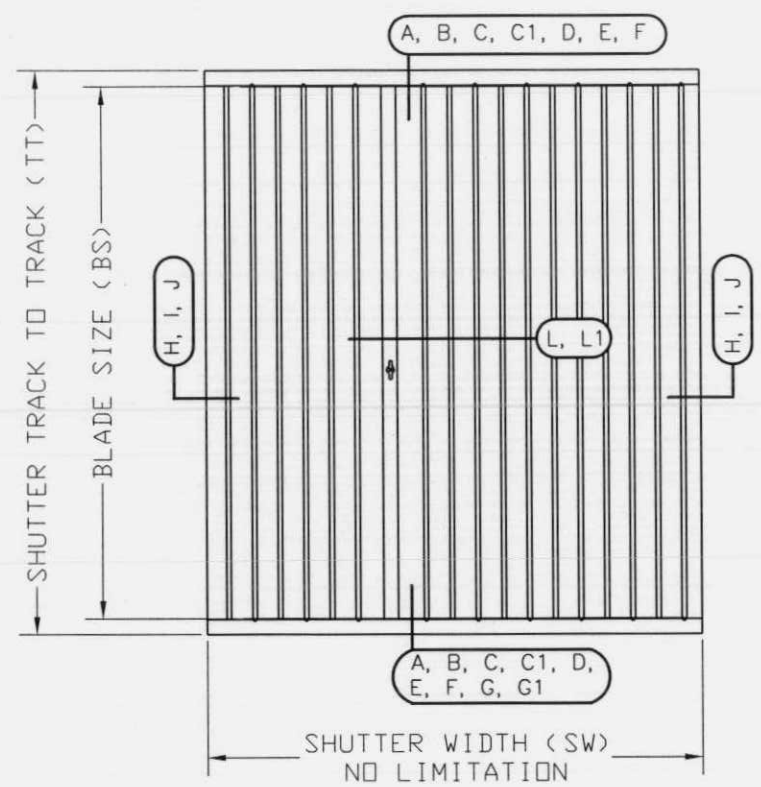

USER INSTRUCTIONS:

1- DETERMINE PROJECT DESIGN WIND LOAD PRESSURES AS PER ITEM 4 OF GENERAL NOTES, SHEET 1.

2- CHECK BLADE SIZE WITH TABLE 1 ON SHEET 1 FOR ALLOWABLE DESIGN PRESSURE.

3- SELECT MOUNT TYPE TO BE USED AS PER SHEETS 2, 3 & 4. MOUNT TYPES ARE INTERCHANGEABLE.

4- CALCULATE ANCHOR SPACING FUNCTION OF BLADE SIZE AND PRESSURE FOR EACH SPECIFIC MOUNT TYPE AS PER SHEETS 2, 3 & 4.

TABLE 1
ALLOWABLE DESIGNED LOADS
X
MAXIMUM BLADE SIZE

BLADE (IN)	PRESSURE (PSF)	
INCHES	POSITIVE	NEGATIVE
60"	188	188
66"	170	170
72"	156	156
78"	144	144
84"	134	134
90"	125	125
96"	117	117
102"	110	110
108"	102	102
114"	92	92
120"	83	83
126"	75	75
132"	69	69
138"	59	63
144"	49	58
150"	42	52

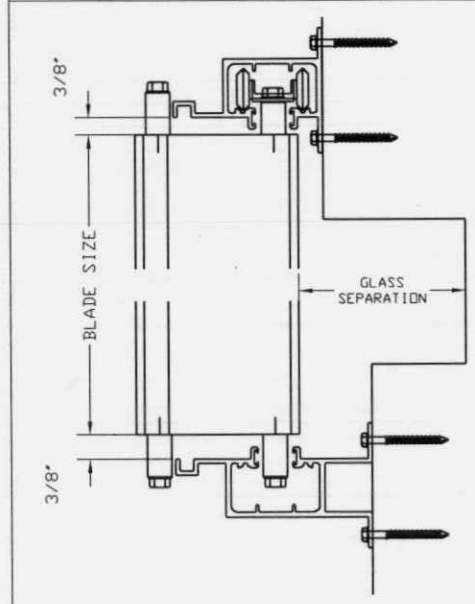

GLASS SEPARATION

INSTALLATION BELOW 30' ELEVATION	BLADE <=120" 3 1/2"	BLADE >120" 4 3/4"
INSTALLATION ABOVE 30' ELEVATION	BLADE <=120" 3"	BLADE >120" 3"

Manufacturer:
CROCI
North America
11600 ADELMO LANE
FORT MYERS, FL 33966
Tel.: (239) 278-3066
Fax: (239) 278-5977
EMAIL: INFO@CROCIUSA.COM

PRODUCT:
CROCI
EXTRUDED ALUMINUM ACCORDION SHUTTER

Engineering:
EngCo Inc.
CA 8116
5595 Orange Dr. 201
Davie, Fl. 33314
Tel.: (954) 585-0304 Fax: (954) 585-0305
ENGCO@AOL.COM

PEDRO M. DE FIGUEIREDO
LICENSE
No. 52609
STATE OF FLORIDA
PROFESSIONAL ENGINEER
FEB 28 2012
Engineer Seal
Pedro De Figueiredo
PE 52609

REVISION

DATE: 2/28/12
SCALE: NA
DESIGN BY: PPMF

Drawing Number
12-043

TYPICAL VERTICAL SECTIONS AND ANCHOR SCHEDULE

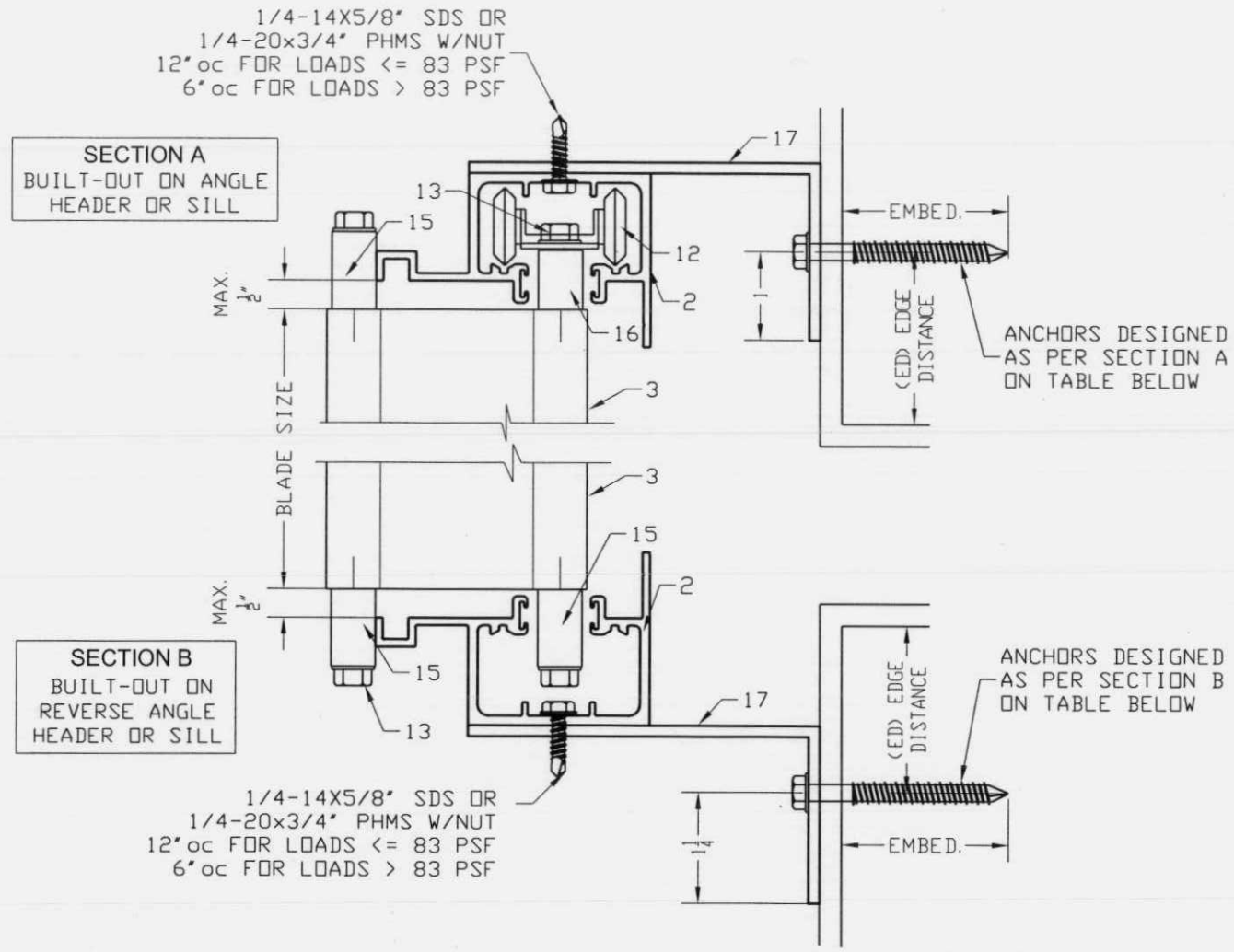

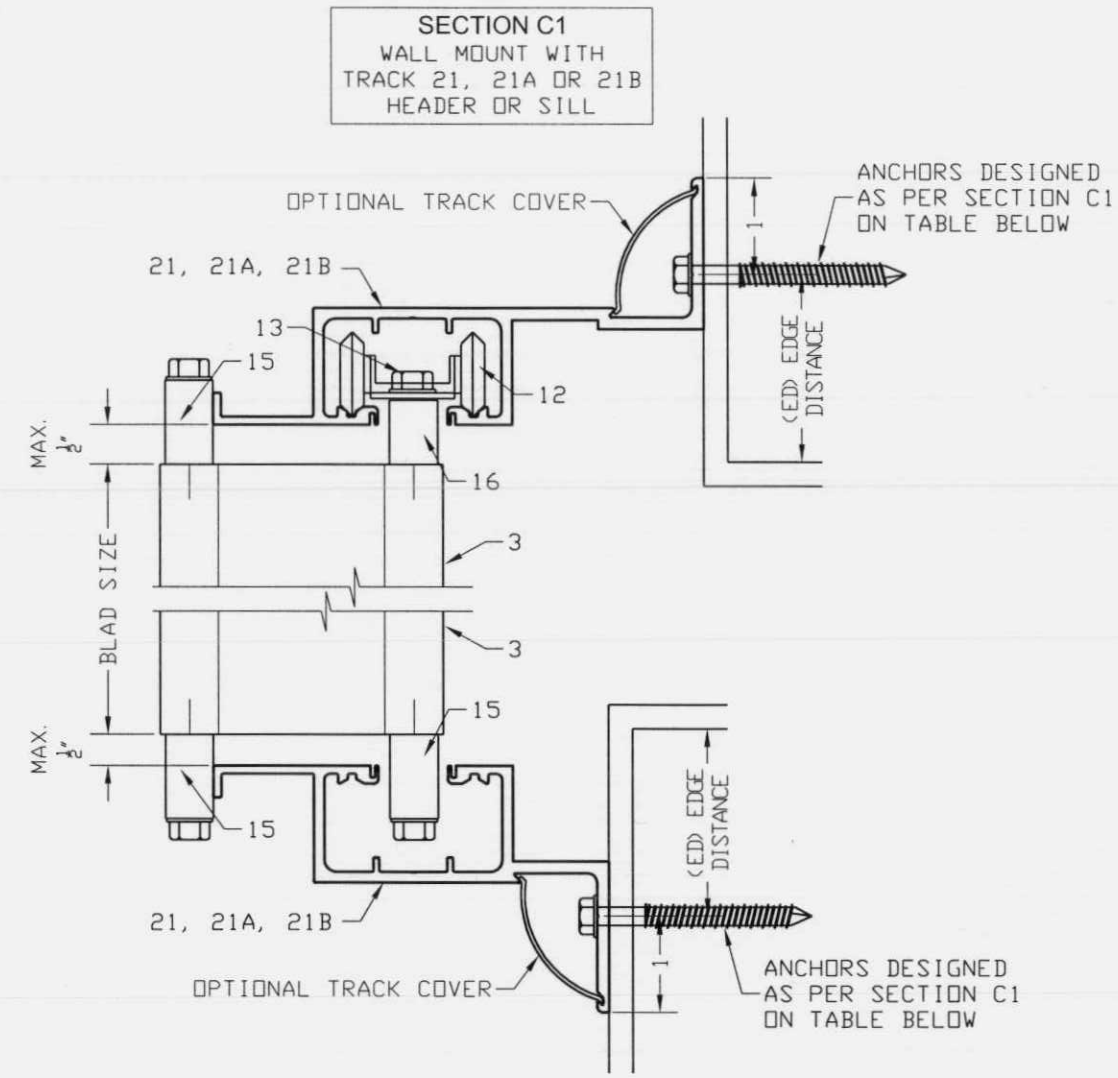

MAX. BLADE SPAN IN INCHES

SEE ANCHOR SCHEDULE ON SHEET 7 FOR ANCHOR TYPE

ANCHORAGE SPACING

MAXIMUM ANCHORAGE PRESSURE (PSF) BASED ON SPACING IN INCHES ON CENTER

		150					120					105					90					60				
	s	A1	B1	A2	B2	A3	A1	B1	A2	B2	A3	A1	B1	A2	B2	A3	A1	B1	A2	B2	A3	A1	B1	A2	B2	A3
SECTION A SILL / HEADER	12	59	51	21	19	53	74	65	26	24	68	86	75	30	28	78	101	88	36	33	92	153	134	55	50	140
	9	80	70	28	26	72	101	88	36	33	92	116	101	41	38	106	136	119	48	44	124	206	181	74	67	189
	6	122	107	43	39	111	153	134	55	50	140	176	154	63	57	161	206	181	74	67	189	---	273	112	101	---
	4	185	162	66	60	170	232	204	83	75	213	266	233	95	86	245	---	273	112	101	---	---	---	169	152	---
	3	---	---	89	---	228	---	---	112	---	---	---	---	128	---	---	---	---	150	---	---	---	---	226	---	---
SECTION B SILL / HEADER	12	31	27	11	10	28	39	34	14	13	36	45	40	16	15	41	53	47	19	17	49	81	71	29	26	74
	9	42	37	15	14	38	53	47	19	17	49	61	54	22	20	56	72	63	26	23	66	109	95	39	35	100
	6	64	56	23	21	59	81	71	29	26	74	93	81	33	30	85	109	95	39	35	100	164	144	59	53	151
	4	98	86	35	32	90	123	108	44	40	113	141	123	50	46	129	164	144	59	53	151	248	218	89	80	228
	3	131	---	47	---	120	164	---	59	---	151	188	---	68	---	173	220	---	79	---	203	---	---	119	---	---
SECTION C1 SILL / HEADER	12	32	28	11	11	29	41	36	15	13	37	47	41	17	15	43	56	49	20	18	51	85	74	30	27	78
	9	44	38	16	14	40	56	49	20	18	51	64	56	23	21	58	75	66	27	24	69	114	100	41	37	104
	6	67	59	24	22	61	85	74	30	27	78	97	85	35	31	89	114	100	41	37	104	172	151	62	56	158
	4	102	90	37	33	94	128	112	46	42	118	147	129	53	48	135	172	151	62	56	158	259	227	93	84	239
	3	137	---	49	---	126	172	---	62	---	158	197	---	71	---	181	230	---	83	---	212	346	---	125	---	319

NOTE: 1- USE IN CONJUNCTION WITH TABLE 1, THE LOWER OF THE PRESSURE CONTROL DESIGN.
2- LINEAR INTERPOLATION IS ALLOWABLE BETWEEN BLADE SPAN SIZES

Manufacturer:
CROCI
North America
11600 ADELMO LANE
FORT MYERS, FL 33966
Tel.: (239) 278-3066
Fax: (239) 278-5977
EMAIL: INFO@CROCIUSA.COM

PRODUCT:
CROCI
EXTRUDED ALUMINUM ACCORDION SHUTTER

Engineering:
EngCo Inc.
CA 8116
5595 Orange Dr. 201
Davie, Fl. 33314
Tel.: (954) 585-0304 Fax: (954) 585-0305
ENGCO@AOL.COM

PEDRO M. DE FIGUEIREDO
LICENSE
No. 52609
STATE OF FLORIDA
PROFESSIONAL ENGINEER
FEB 28 2012

Engineer Seal
Pedro De Figueiredo
PE 52609

REVISION

DATE: 2/28/12
SCALE: NA
DESIGN BY: PPMF

Drawing Number
12-043

TYPICAL VERTICAL SECTIONS AND ANCHOR SCHEDULE

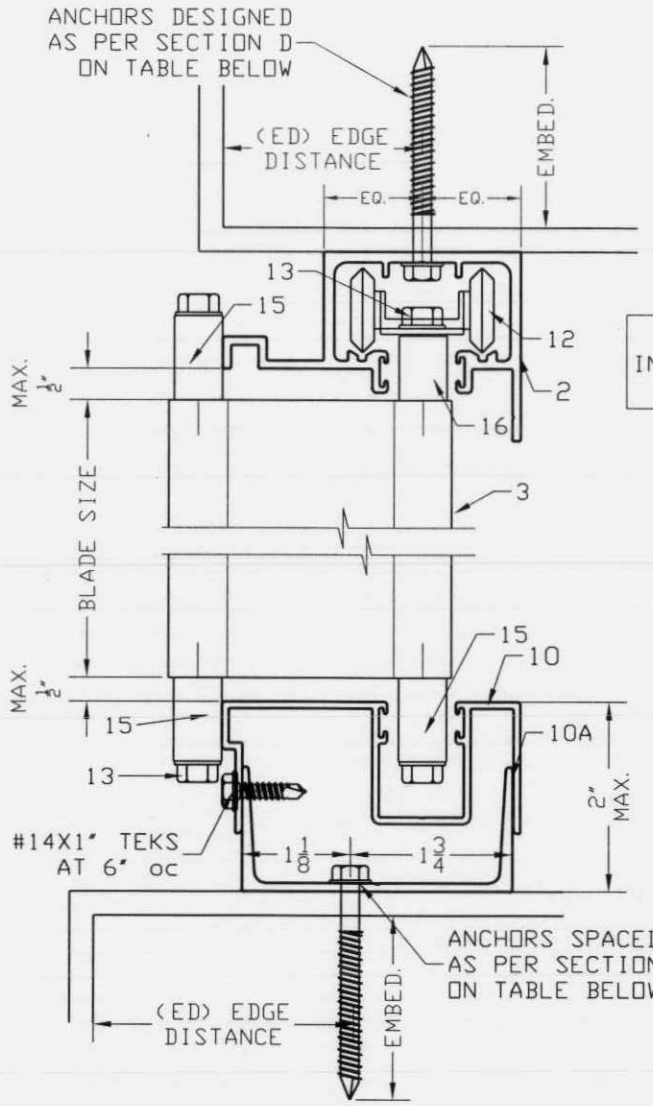

SECTION D
INSET MOUNT W/ TRACK 2
HEADER OR SILL

SECTION G
ADJUSTABLE MOUNT
SILL ONLY

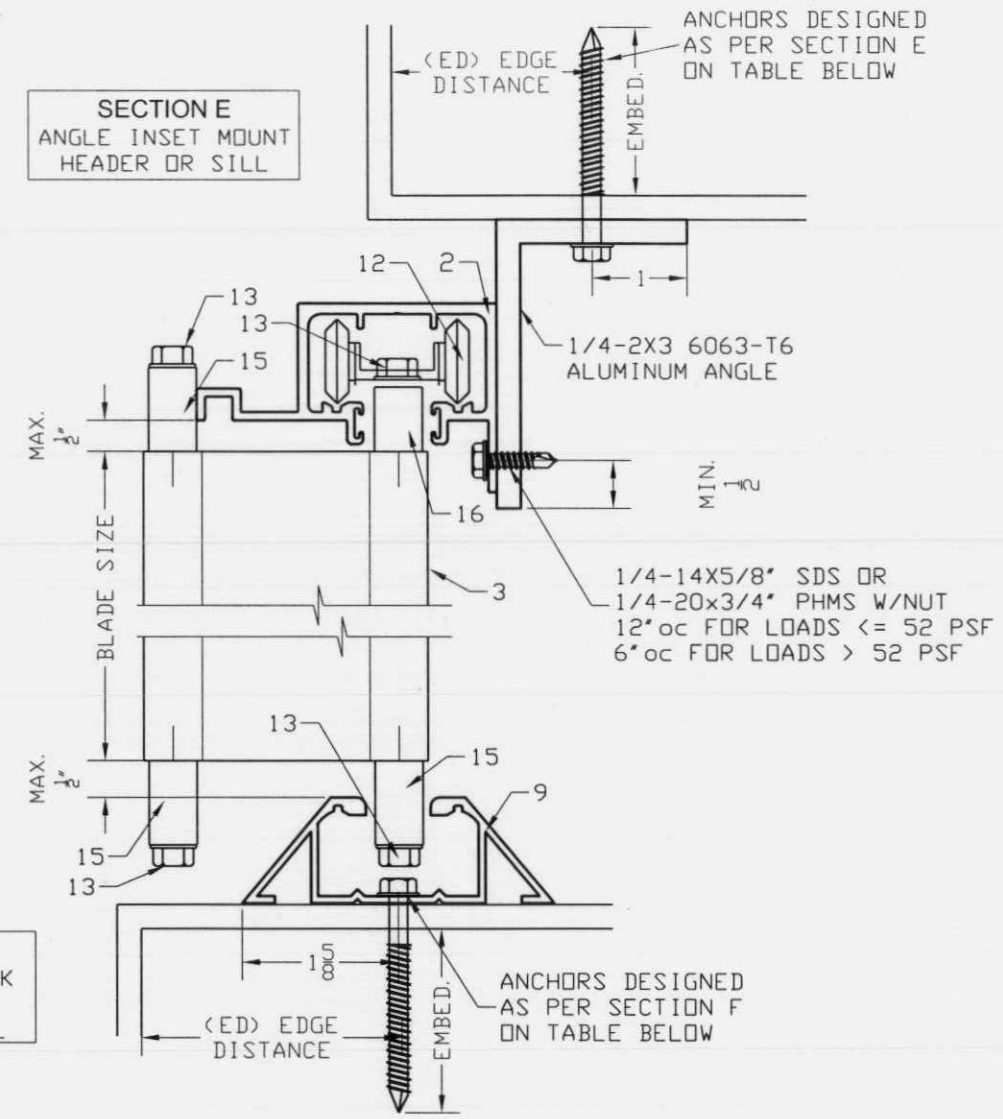

SECTION E
ANGLE INSET MOUNT
HEADER OR SILL

SECTION F
THRESHOLD TRACK
INSET MOUNT
HEADER OR SILL

MAX. BLADE SPAN IN INCHES

SEE ANCHOR SCHEDULE ON SHEET 7 FOR ANCHOR TYPE

ANCHORAGE SPACING

		MAXIMUM ANCHORAGE PRESSURE (PSF) BASED ON SPACING IN INCHES ON CENTER																			
		150				120				105				90				60			
	s	A1	B1	A3	A4	A1	B1	A3	A4	A1	B1	A3	A4	A1	B1	A3	A4	A1	B1	A3	A4
SECTION G SILL ONLY	12	28	29	24	35	35	36	30	43	41	41	34	49	47	48	40	58	71	73	60	87
	9	38	39	32	46	47	48	40	58	54	55	45	66	63	65	53	77	95	97	80	115
	6	57	58	48	69	71	73	60	87	81	83	68	99	95	97	80	115	142	145	119	173
	4	85	87	72	104	106	109	90	130	122	124	102	148	142	145	119	173	213	218	179	260
	3	113	---	95	139	142	---	119	173	162	---	136	198	189	---	159	231	---	---	239	---
SECTION D SILL ONLY	12	31	32	25	38	39	40	32	48	44	46	37	56	52	54	43	65	79	82	65	99
	9	41	43	34	52	52	54	43	65	60	62	49	75	70	73	58	88	105	110	88	132
	6	63	65	52	79	79	82	65	99	90	94	75	113	105	110	88	132	159	166	132	199
	4	95	99	79	119	119	124	99	149	136	142	113	171	159	166	132	199	239	250	199	---
	3	127	---	105	159	159	---	132	199	182	---	151	228	212	---	176	---	---	---	265	---
SECTION E SILL ONLY	12	21	21	18	25	27	27	23	33	32	31	27	38	38	37	32	45	58	58	49	69
	9	29	29	25	35	38	37	32	45	44	43	37	52	51	51	44	61	79	79	67	94
	6	46	46	39	55	58	58	49	69	67	67	57	80	79	79	67	94	120	120	102	143
	4	71	70	60	84	89	89	76	106	102	102	87	122	120	120	102	143	182	182	155	216
	3	95	---	81	113	120	---	102	143	138	---	117	164	161	---	137	192	244	---	207	---
SECTION F SILL ONLY	12	40	43	32	53	50	55	40	67	57	63	46	77	67	74	54	91	102	112	82	138
	9	53	59	43	72	67	74	54	91	77	85	62	104	90	99	73	122	136	150	110	184
	6	81	89	65	110	102	112	82	138	116	129	94	158	136	150	110	184	205	227	166	278
	4	122	135	99	166	153	170	124	208	176	194	142	238	205	227	166	278	---	---	249	---
	3	164	---	132	222	205	---	166	---	235	---	190	---	---	---	221	---	---	---	---	---

NOTE: 1- USE IN CONJUNCTION WITH TABLE 1, THE LOWER OF THE PRESSURE CONTROL DESIGN.
2- LINEAR INTERPOLATION IS ALLOWABLE BETWEEN BLADE SPAN SIZES

Manufacturer:
CROCI
North America
11600 ADELMO LANE
FORT MYERS, FL 33966
Tel.: (239) 278-3066
Fax: (239) 278-5977
EMAIL: INFO@CROCIUSA.COM

PRODUCT:
CROCI
EXTRUDED ALUMINUM ACCORDION SHUTTER

Engineering:
EngCo Inc.
CA 8116
5595 Orange Dr. 201
Davie, Fl. 33314
Tel.: (954) 585-0304 Fax: (954) 585-0305
ENGCO@AOL.COM

PEDRO M. DE FIGUEIREDO
LICENSE
No. 52609
STATE OF FLORIDA
PROFESSIONAL ENGINEER
FEB 28 2012
Engineer Seal
Pedro De Figueiredo
PE 52609

REVISION

DATE: 2/28/12
SCALE: NA
DESIGN BY: PPMF

Drawing Number
12-043

TYPICAL VERTICAL SECTIONS AND ANCHOR SCHEDULE

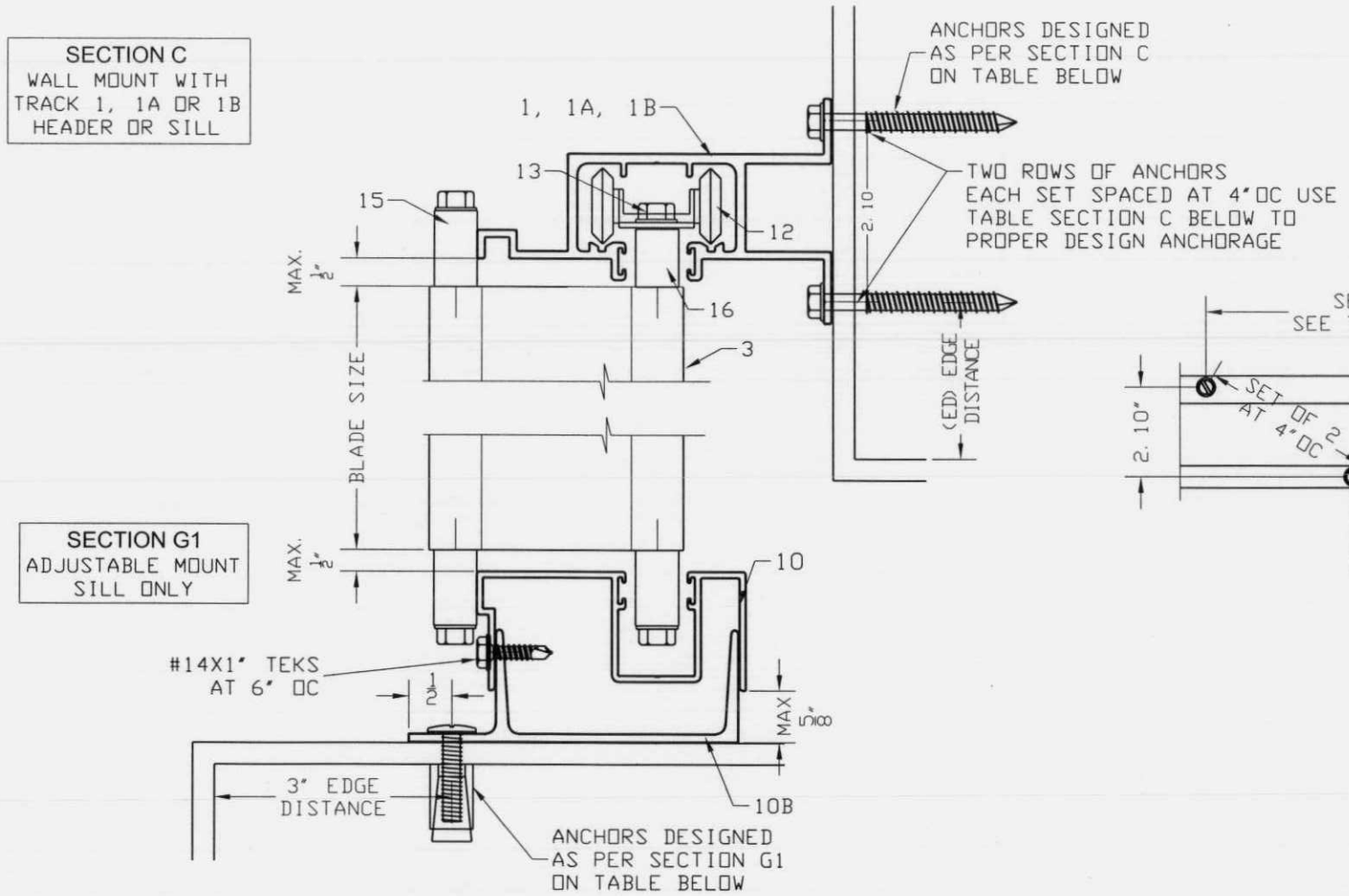

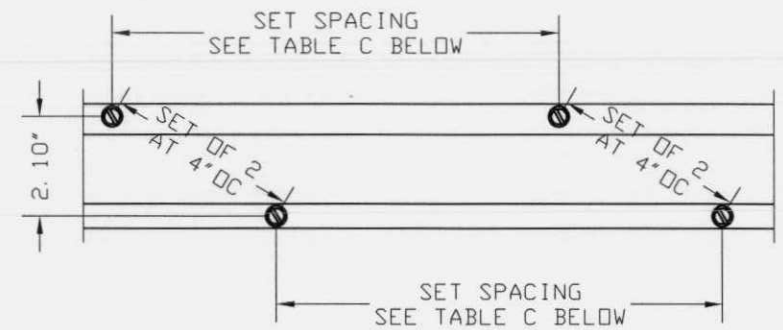

MAX. BLADE SPAN IN INCHES

SEE ANCHOR SCHEDULE ON SHEET 7 FOR ANCHOR TYPE

ANCHORAGE SPACING

		MAXIMUM ANCHORAGE PRESSURE (PSF) BASED ON SPACING IN INCHES ON CENTER																								
		150					120					105					90					60				
	s	A1	B1	A2	B2	A3	A1	B1	A2	B2	A3	A1	B1	A2	B2	A3	A1	B1	A2	B2	A3	A1	B1	A2	B2	A3
SECTION C SILL / HEADER	24	52	45	18	17	47	65	57	23	21	59	75	66	27	24	69	88	77	31	29	81	135	118	48	44	123
	16	79	69	28	26	72	100	87	36	32	91	115	101	41	37	105	135	118	48	44	123	204	179	73	66	187
	12	107	94	38	35	98	135	118	48	44	123	154	135	55	50	142	181	159	65	59	166	---	240	98	89	251
	8	162	142	58	53	149	204	179	73	66	187	234	205	84	76	215	273	240	98	89	251	---	---	148	133	---
	6	218	191	78	71	200	---	240	98	89	---	---	---	112	101	---	---	---	131	118	---	---	---	198	178	---

		MAXIMUM ANCHORAGE PRESSURE (PSF) BASED ON SPACING IN INCHES ON CENTER																			
		150				120				105				90				60			
	s	A1	B1	A3	A4	A1	B1	A3	A4	A1	B1	A3	A4	A1	B1	A3	A4	A1	B1	A3	A4
SECTION G1 SILL ONLY	12	17	17	15	20	22	21	19	24	25	24	22	28	29	28	25	33	43	42	38	49
	9	23	22	20	26	29	28	25	33	33	32	29	37	38	37	34	43	58	55	50	65
	6	35	33	30	39	43	42	38	49	49	48	43	56	58	55	50	65	86	83	75	98
	4	52	50	45	59	65	62	57	73	74	71	65	84	86	83	75	98	130	125	113	146
	3	69	67	60	78	86	83	75	98	99	95	86	111	115	111	101	130	173	166	151	195

NOTE: 1- USE IN CONJUNCTION WITH TABLE 1, THE LOWER OF THE PRESSURE CONTROL DESIGN.
2- LINEAR INTERPOLATION IS ALLOWABLE BETWEEN BLADE SPAN SIZES

Manufacturer:
CROCI
North America
11600 ADELMO LANE
FORT MYERS, FL 33966
Tel.: (239) 278-3066
Fax: (239) 278-5977
EMAIL: INFO@CROCIUSA.COM

PRODUCT:
CROCI
EXTRUDED ALUMINUM ACCORDION SHUTTER

Engineering:
EngCo Inc.
CA 8116
5595 Orange Dr. 201
Davie, Fl. 33314
Tel.: (954) 585-0304 Fax: (954) 585-0305
ENGCO@AOL.COM

PEDRO M. DE FIGUEIREDO LICENSE No. 52609 STATE OF FLORIDA PROFESSIONAL ENGINEER
FEB 28 2012
Engineer Seal
Pedro De Figueiredo
PE 52609

REVISION

DATE: 2/28/12
SCALE: NA
DESIGN BY: PPMF

Drawing Number
12-043

TYPICAL HORIZONTAL SECTIONS
JAMB & CORNER SECTIONS

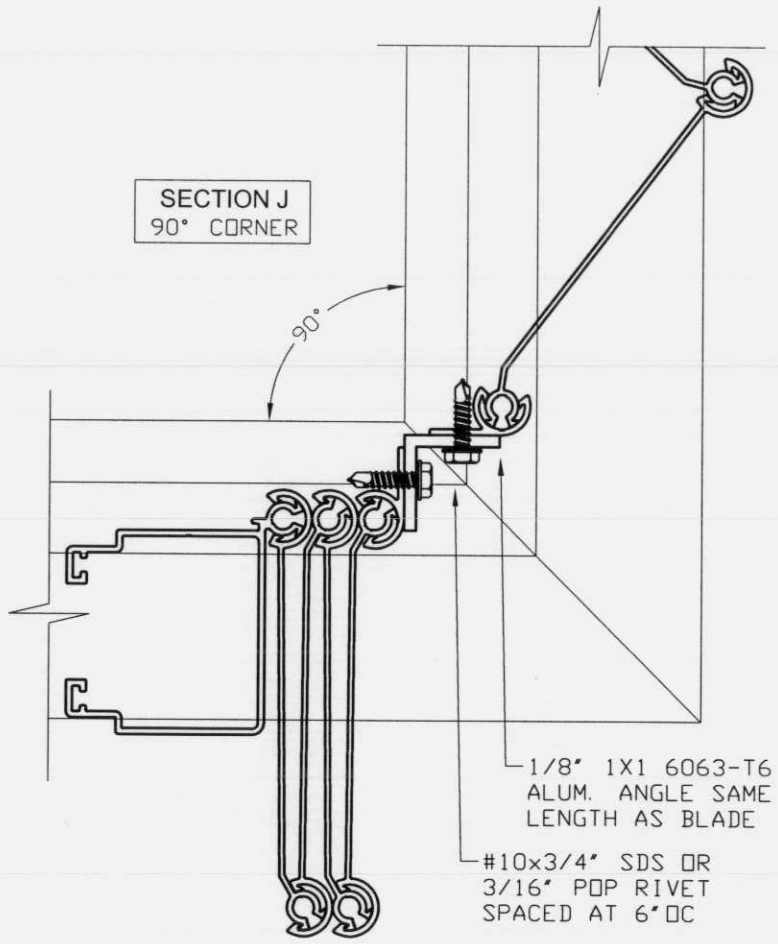

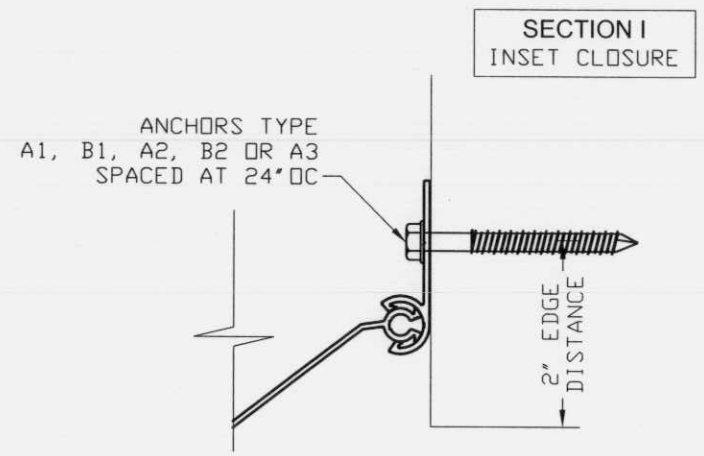

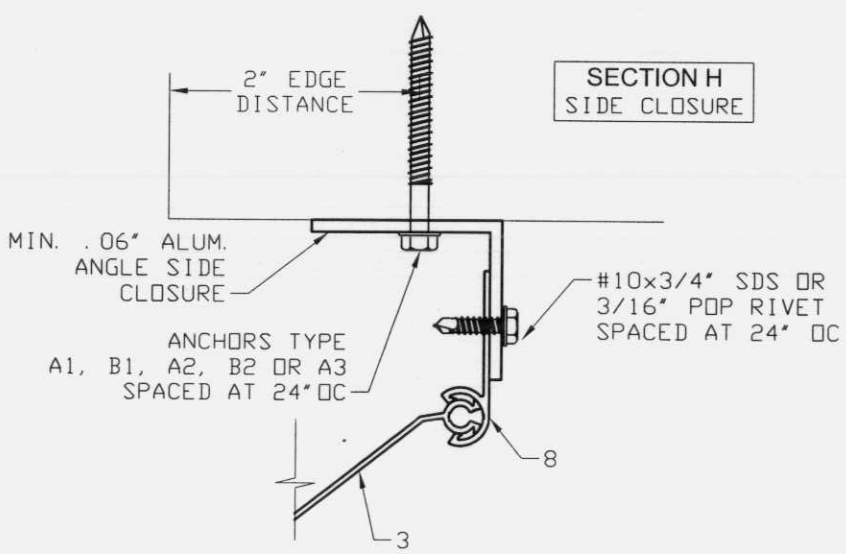

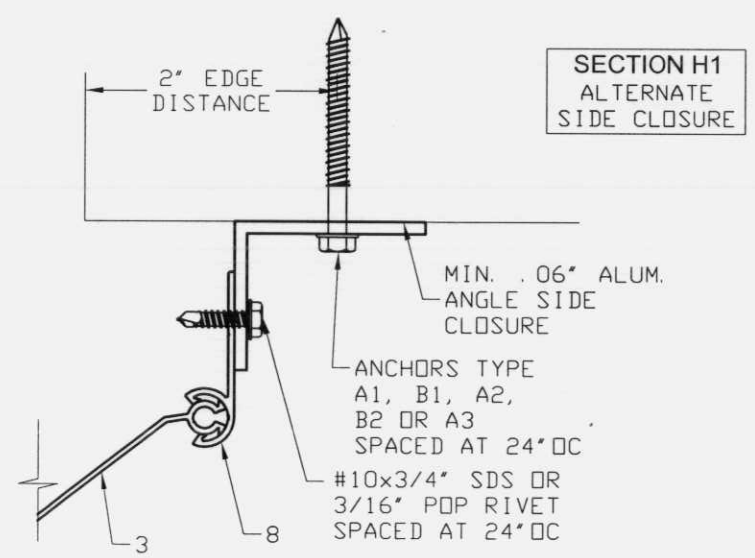

Manufacturer:

CROCI

North America
11600 ADELMO LANE
FORT MYERS, FL 33966
Tel.: (239) 278-3066
Fax: (239) 278-5977
EMAIL: INFO@CROCIUSA.COM

PRODUCT:

CROCI

EXTRUDED ALUMINUM
ACCORDION SHUTTER

Engineering:

EngCo Inc.
CA 8116
5595 Orange Dr. 201
Davie, Fl. 33314
Tel.: (954) 585-0304 Fax: (954) 585-0305
ENGCO@AOL.COM

PEDRO M. DE FIGUEIREDO
LICENSE
No. 52609
STATE OF
FLORIDA
PROFESSIONAL ENGINEER
FEB. 28 2012

Engineer Seal
Pedro De Figueiredo
PE 52609

REVISION

DATE: 2/28/12
SCALE: NA
DESIGN BY: PPMF

Drawing Number
12-043

Sheet
5 of 9

TYPICAL HORIZONTAL SECTIONS
LOCK SECTIONS

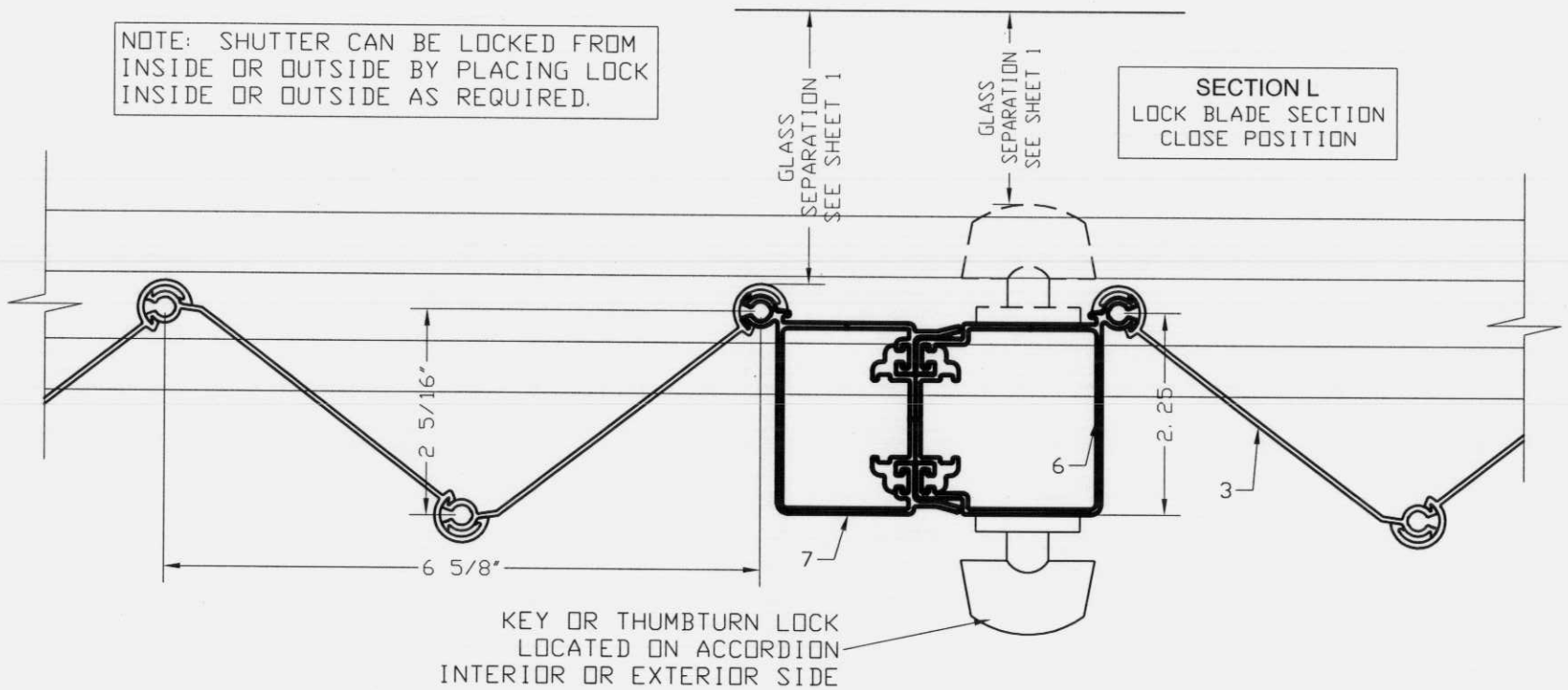

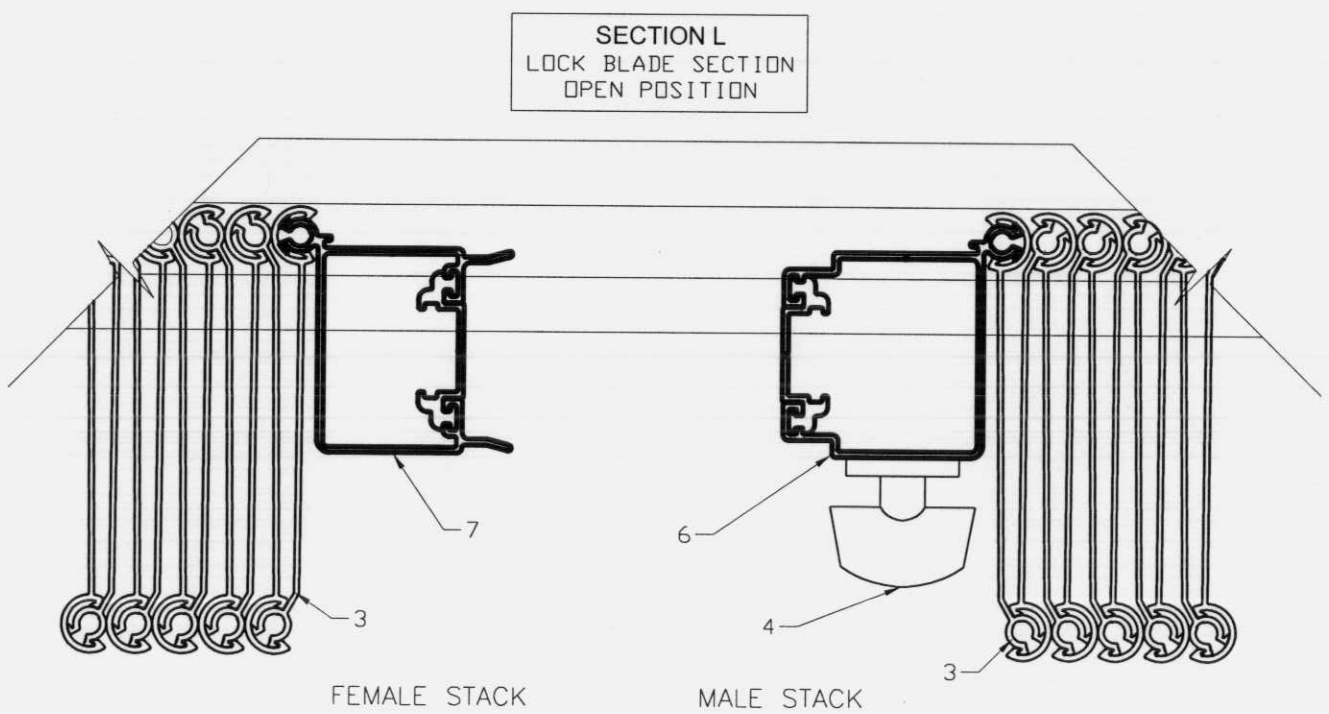

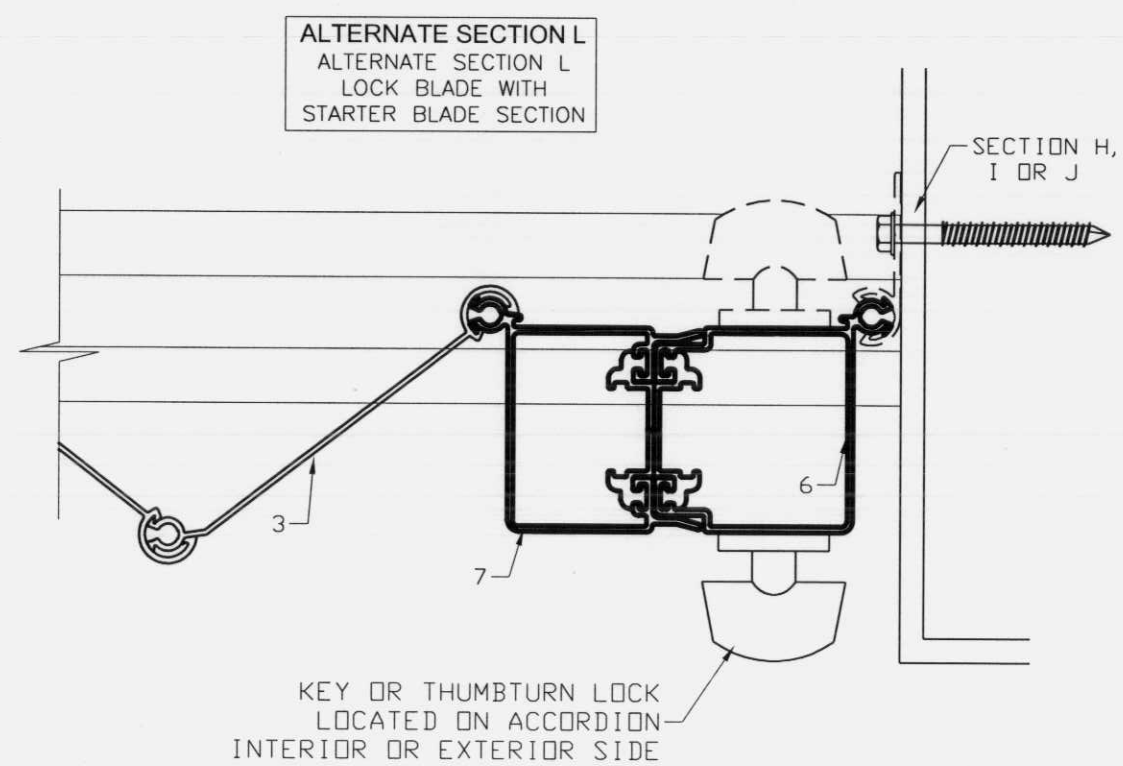

Manufacturer:
CROCI
North America
11600 ADELMO LANE
FORT MYERS, FL 33966
Tel.: (239) 278-3066
Fax: (239) 278-5977
EMAIL: INFO@CROCIUSA.COM

PRODUCT:
CROCI
EXTRUDED ALUMINUM ACCORDION SHUTTER

Engineering:
EngCo Inc.
CA 8116
5595 Orange Dr. 201
Davie, Fl. 33314
Tel.: (954) 585-0304 Fax: (954) 585-0305
ENGCO@AOL.COM

PEDRO M. DE FIGUEIREDO
LICENSE
No. 52609
STATE OF FLORIDA
PROFESSIONAL ENGINEER
FEB 28 2012

Engineer Seal
Pedro De Figueiredo
PE 52609

REVISION

DATE: 2/28/12
SCALE: NA
DESIGN BY: PPMF

Drawing Number
12-043

TYPICAL HORIZONTAL UNIMATE LOCK SECTIONS

NOTE: SHUTTER CAN BE LOCKED FROM INSIDE OR OUTSIDE BY PLACING THE PUSH BUTTOM LOCK OR THUM SCREW INSIDE OR OUTSIDE AS REQUIRED.

SECTION L1
LOCK BLADE SECTION
CLOSE POSITION

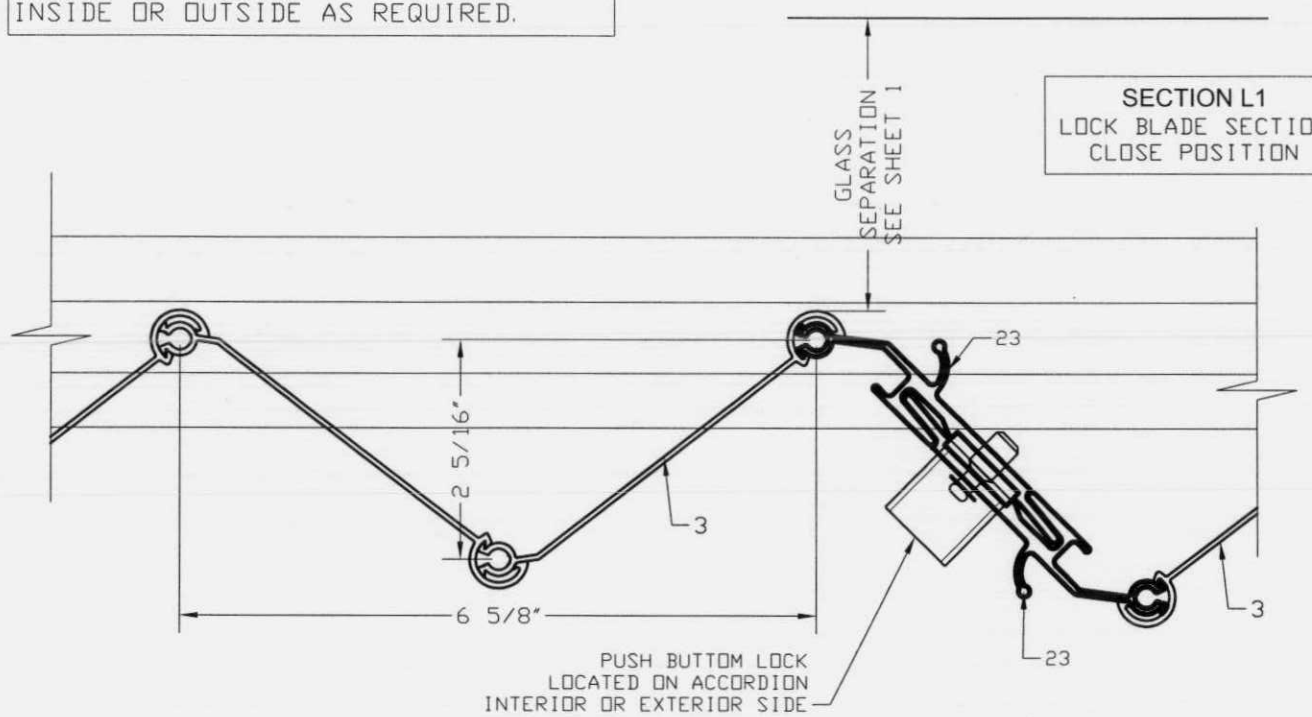

SECTION L1
LOCK BLADE SECTION
CLOSE POSITION
W/ THUMB SCREW

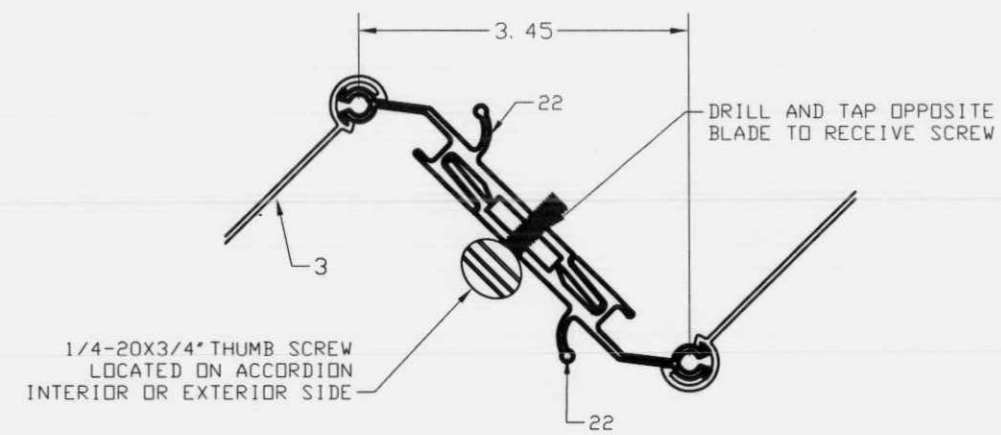

SECTION L1
LOCK BLADE SECTION
OPEN POSITION

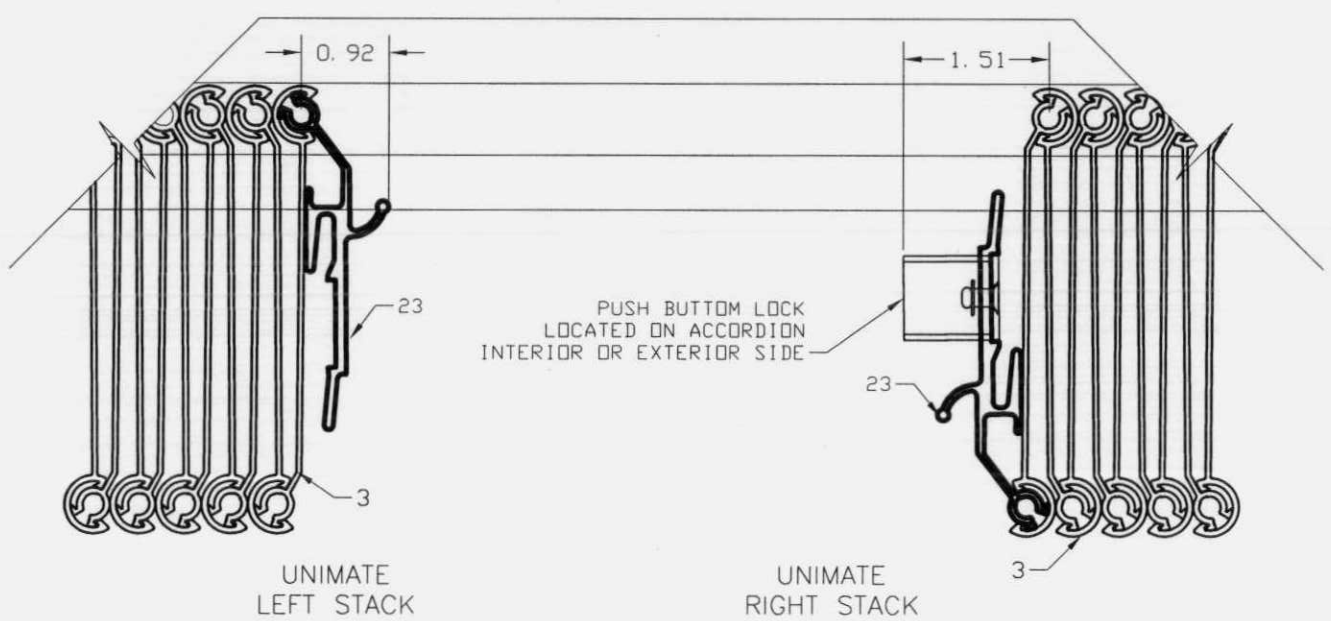

ALTERNATE SECTION L1
UNIMATE LOCK BLADE WITH
STARTER BLADE SECTION

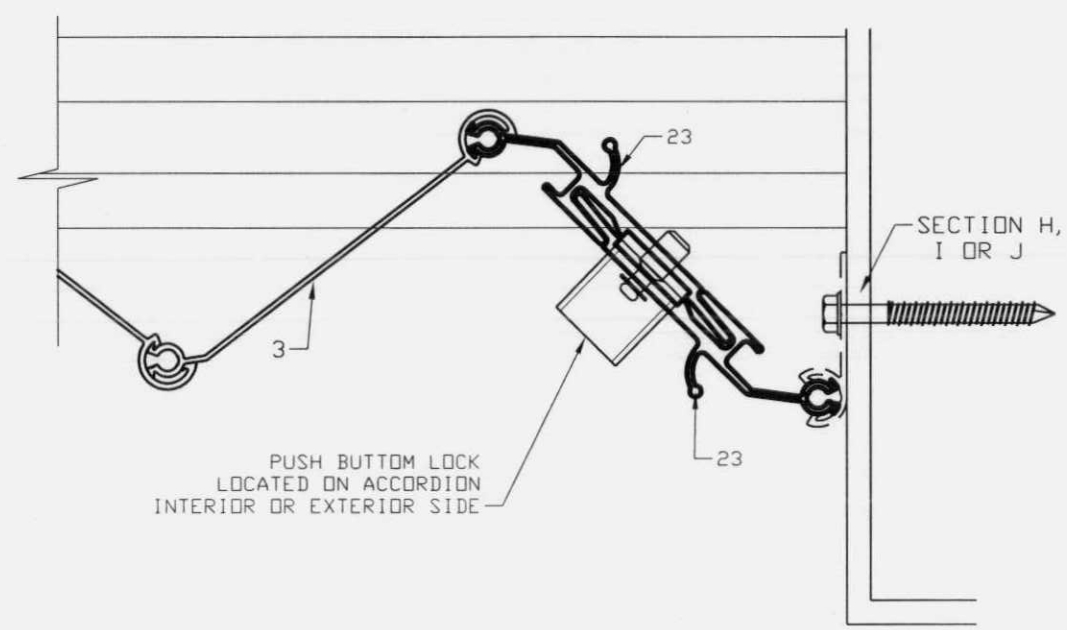

Manufacturer:
CROCI
North America
11600 ADELMO LANE
FORT MYERS, FL 33966
Tel.: (239) 278-3066
Fax: (239) 278-5977
EMAIL: INFO@CROCIUSA.COM

PRODUCT:
CROCI
EXTRUDED ALUMINUM ACCORDION SHUTTER

Engineering:
EngCo Inc.
CA 8116
5595 Orange Dr. 201
Davie, Fl. 33314
Tel.: (954) 585-0304 Fax: (954) 585-0305
ENGCO@AOL.COM

PEDRO M. DE FIGUEIREDO
LICENSE
No. 52609
STATE OF FLORIDA
PROFESSIONAL ENGINEER
FEB 28 2012

Engineer Seal
Pedro De Figueiredo
PE 52609

REVISION

DATE: 2/28/12
SCALE: NA
DESIGN BY: PPMF

Drawing Number
12-043

TYPICAL BLADE ASSEMBLY

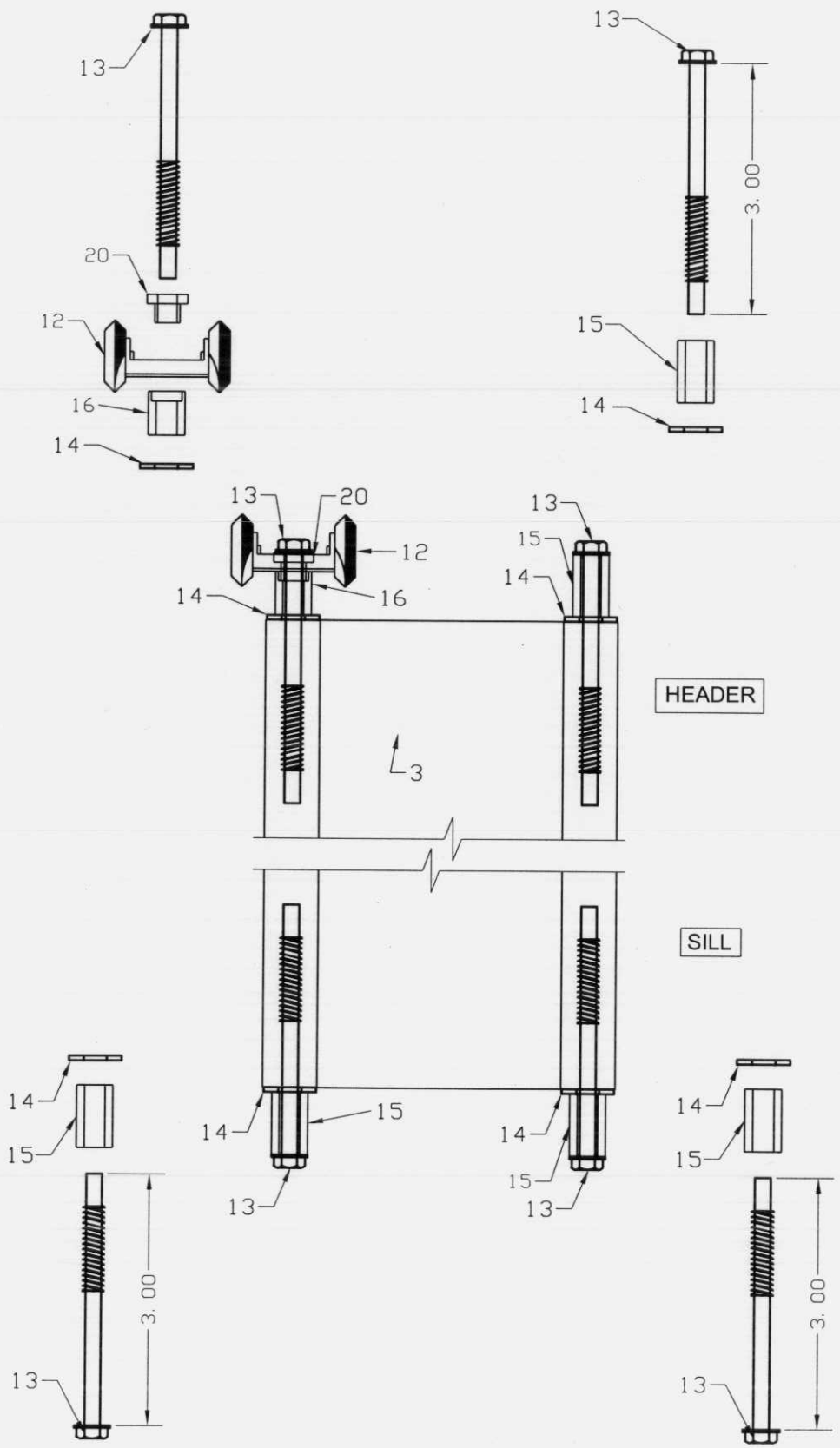

BILL OF MATERIALS

ITEM	DESCRIPTION	MATERIAL	MANUFACTURER
1	1" WALL MOUNT TRACK	6063-T6 ALUMINUM	CROCI
1A	2" WALL MOUNT TRACK	6063-T6 ALUMINUM	CROCI
1B	3" WALL MOUNT TRACK	6063-T6 ALUMINUM	CROCI
2	CEILING TRACK	6063-T6 ALUMINUM	CROCI
3	ACCORDION BLADE	6063-T6 ALUMINUM	CROCI
4	LOCK		
5	LOCK BLADE INSERT	6063-T6 ALUMINUM	CROCI
6	MALE LOCK BLADE	6063-T6 ALUMINUM	CROCI
7	FEMALE LOCK BLADE	6063-T6 ALUMINUM	CROCI
8	STARTER BLADE	6063-T6 ALUMINUM	CROCI
9	"A" TRACK	6063-T6 ALUMINUM	CROCI
10	ADJUSTABLE TRACK	6063-T6 ALUMINUM	CROCI
10A	ADJUST. CHANNEL	6063-T6 ALUMINUM	CROCI
10B	ADJUST. CHANNEL W/ FLANGE	6063-T6 ALUMINUM	CROCI
11			
12	WHEEL CARRIER	PLATED STEEL/ NYLON	CROCI
13	1/4"X3" SCREW BLADE	410 STAINLESS STEEL	CROCI
14	1/2" SS FLAT WASHER	STAINLESS STEEL	CROCI
15	1"x7/16" BUSHING	NYLON	CROCI
16	1/2"x7/8" WHEEL BUSHING	NYLON	CROCI
17	1/8 BUILT-OUT ANGLES	6063-T6 ALUMINUM	CROCI
18	1/4"-2X3 ANGLE	6063-T6 ALUMINUM	CROCI
19	PUSH-BUTTOM LOCK		
20	1/2"x 1/4" WHEEL SPACER	NYLON	CROCI
21	1" WALL MOUNT TRACK	6063-T6 ALUMINUM	CROCI
21A	2" WALL MOUNT TRACK	6063-T6 ALUMINUM	CROCI
21B	3" WALL MOUNT TRACK	6063-T6 ALUMINUM	CROCI
22	0.04" OPTIONAL COVER	ALUMINUM BREAK METAL	CROCI
23	UNIMATE LOCK BLADE	6063-T6 ALUMINUM	CROCI

ANCHOR SCHEDULE

ANCHOR	DESCRIPTION	EMBED.	ED	MANUFACTURER
A1	1/4" TAPCON INTO MIN. 3000 PSI CONCRETE	1-3/4"	2-1/2	ITW
B1	1/4" ULTRACON INTO MIN. 2700 PSI CONCRETE	1-3/4"	2-1/2	ELCO
	1/4" ULTRACON INTO GF C90- BLOCK	2-1/4"	2-1/2	ELCO
A2	1/4" TAPCON INTO C-90 HOLLOW BLOCK	1-1/4"	2-1/2	ITW
B2	1/4" ULTRACON INTO C90- HOLLOW BLOCK	1-1/4"	2-1/2	ELCO
A3	1/4" TAPCONS/ ULTRACON TO WOOD (SG>=.55)	1-1/2"	1.0	ITW / ELCO
	#14 WOOD SCREWS (SG>=.55)	1-1/2"	1.0	GENERIC
A4	1/4-20 SOLID-SET INTO MIN. 3000 PSI CONCRETE	7/8"	3.0	ALL POINTS

Manufacturer:
CROCI
North America
11600 ADELMO LANE
FORT MYERS, FL 33966
Tel.: (239) 278-3066
Fax: (239) 278-5977
EMAIL: INFO@CROCIUSA.COM

PRODUCT:
CROCI
EXTRUDED ALUMINUM ACCORDION SHUTTER

Engineering:
EngCo Inc.
CA 8116
5595 Orange Dr. 201
Davie, Fl. 33314
Tel.: (954) 585-0304 Fax: (954) 585-0305
ENGCO@AOL.COM

PEDRO M. DE FIGUEIREDO
LICENSE
No. 52609
STATE OF FLORIDA
PROFESSIONAL ENGINEER
FEB 28 2012

Engineer Seal
Pedro De Figueiredo
PE 52609

REVISION

DATE: 2/28/12
SCALE: NA
DESIGN BY: PPMF

Drawing Number
12-043

COMPONENTS

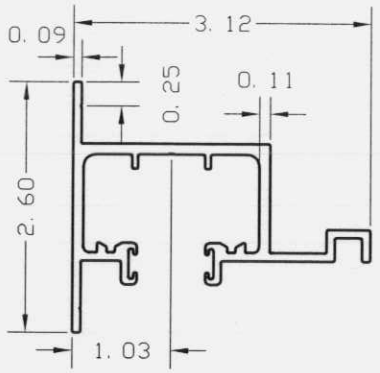

1– 1" WALL MOUNT TRACK

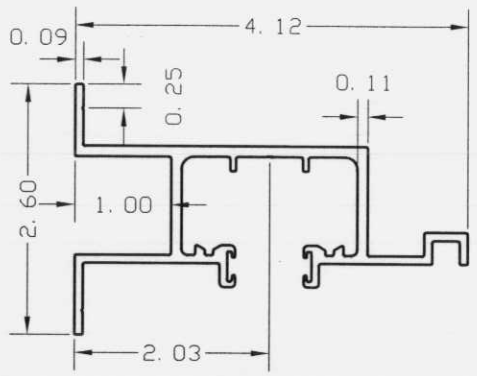

1A– 2" WALL MOUNT TRACK

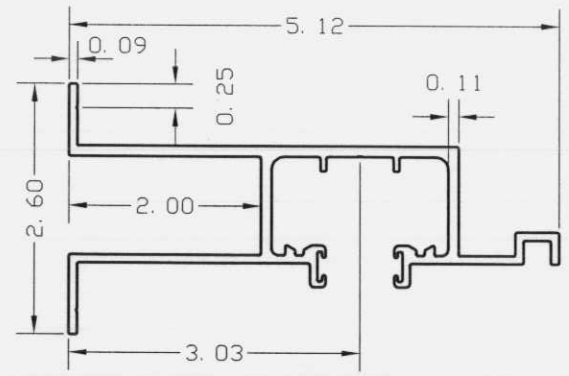

1B– 3" WALL MOUNT TRACK

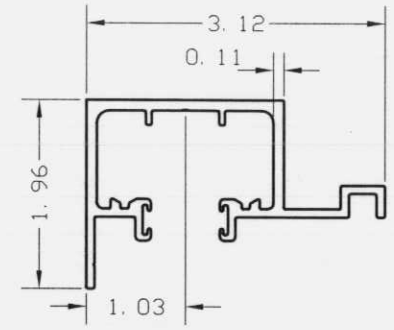

2– CEILING TRACK

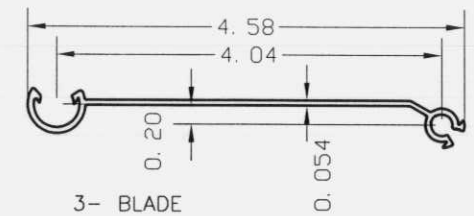

3– BLADE

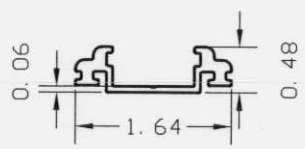

5– LOCK BLADE INSERT

6– MALE LOCK STYLE

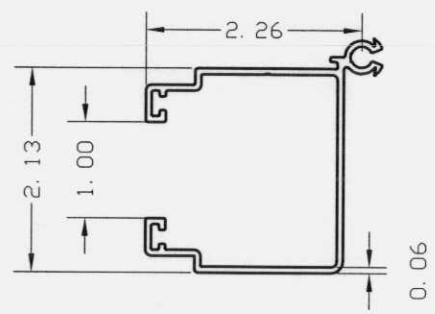

7– FEMALE LOCK STYLE

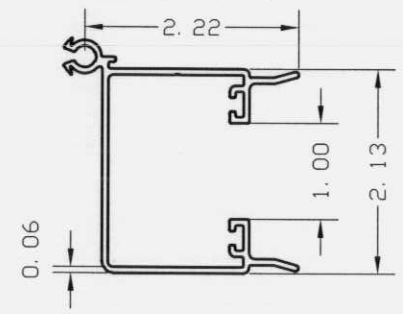

8– STARTER BLADES

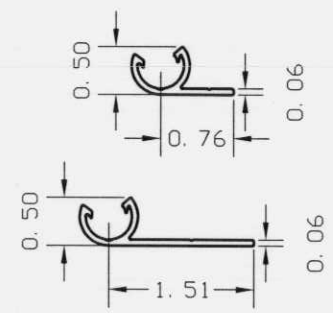

9– "A" TRACK

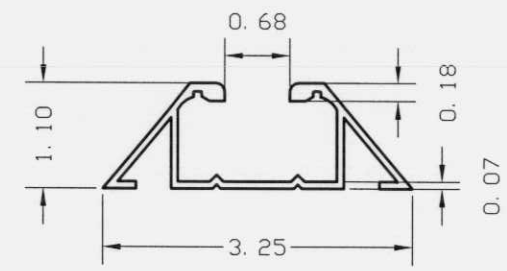

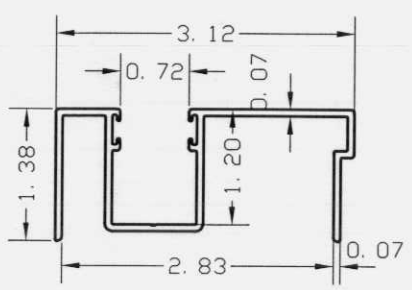

10–ADJUSTABLE SILL TRACK

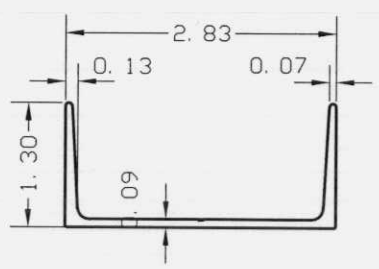

10A– ADJUSTABLE SILL CHANNEL

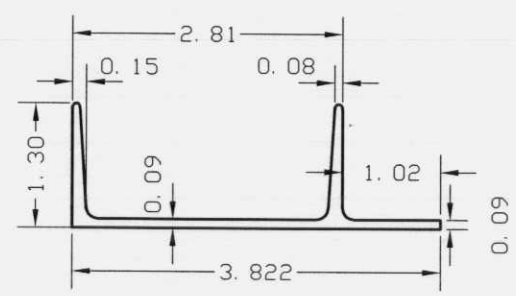

10B– ADJUSTABLE SILL CHANNEL W/ FLANGE

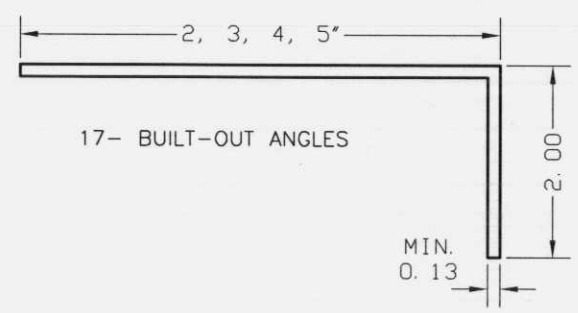

17– BUILT-OUT ANGLES

18– MOUNT TYPE E ANGLE

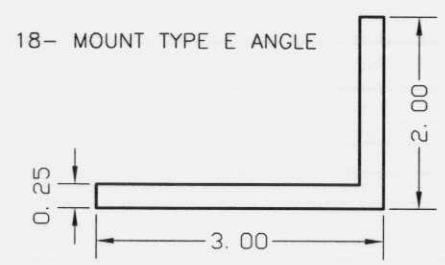

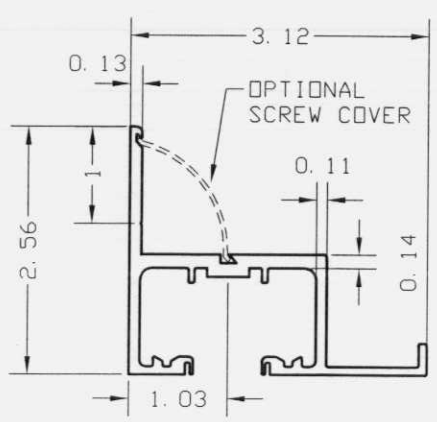

21– 1" WALL MOUNT TRACK

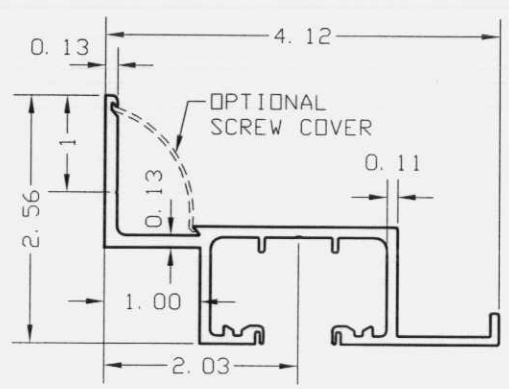

21A– 2" WALL MOUNT TRACK

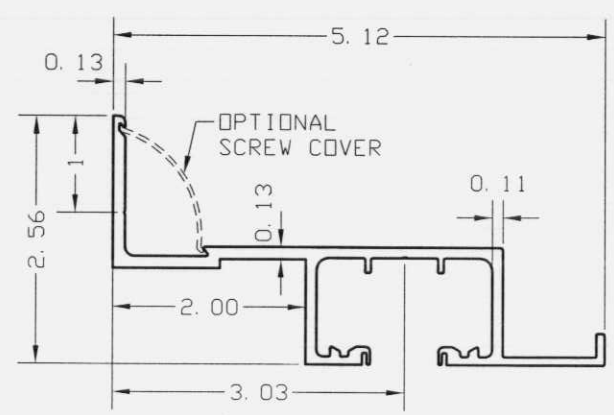

21B– 3" WALL MOUNT TRACK

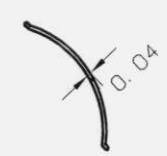

22– 0.04" BREAK METAL
OPTIONAL SCREW COVER

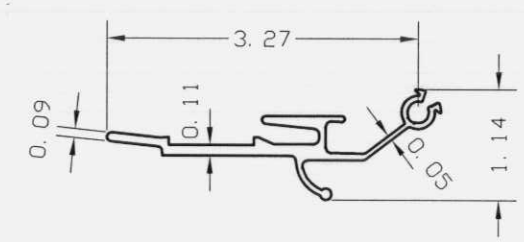

23– UNIMATE LOCK STYLE

Manufacturer:
CROCI
North America
11600 ADELMO LANE
FORT MYERS, FL 33966
Tel.: (239) 278-3066
Fax: (239) 278-5977
EMAIL: INFO@CROCIUSA.COM

PRODUCT:
CROCI
EXTRUDED ALUMINUM
ACCORDION SHUTTER

Engineering:
EngCo Inc.
CA 8116
5595 Orange Dr. 201
Davie, Fl. 33314
Tel.: (954) 585-0304 Fax: (954) 585-0305
ENGCO@AOL.COM

PEDRO M. DE FIGUEIREDO
LICENSE
No. 52609
STATE OF
FLORIDA
PROFESSIONAL ENGINEER
FEB 28 2012

Engineer Seal
Pedro De Figueiredo
PE 52609

REVISION

DATE: 2/28/12
SCALE: NA
DESIGN BY: PPMF

Drawing Number
12-043