2 Hour Fire Rated Through Penetration Firestop for Multiple Metal Pipe through Concrete floors or walls using FYRE-SHIELD.

Drawing not to scale

CAJ1047 (326)

F-rating = 2 Hr.
T-rating = 0 Hr.

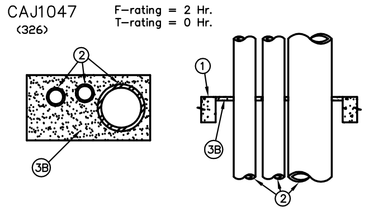

① Floor or Wall assembly = 4 " thick concrete, Max. area of opening is 288 sq. in.
② • Nom. 8" diam. (or smaller) Sch. 40 (or heavier) steel pipe
• Nom. 4" diam. (or smaller) copper pipe and emt pipe.
• Max. number of pipes with opening is three (3).
③ A) Forming Material – (Not shown) – Nom. 1" thick ploy-urethane backer rod friction fitted into opening.
B) Nom. ¼" FYRE-SHIELD thickness installed within OPENING

NOTE: For wall apply FYRE-SHIELD to both surfaces of wall.

The products used in the above assembly have been tested in accordance with the following:
- ASTM E814 (UL1479) Standard Test Method for Through Penetration Firestopping.
- ASTM E119 (UL 263) Standard for Fire Tests

The above described assembly and products have been tested and are based on test data and accompanying engineering judgement. UL/CTL shall not be liable for any damages, direct or consequential, arising out of the use of the material or design. Buyer shall not be responsible for repairing material found to be defective.

1 Hour Fire Rated Through Penetration Firestop for Single Plastic Pipe through Gypsum Walls using TREMstop WS and TREMstop MCR.

Drawing not to scale

WL2083
Configuration A

F-rating = 1 Hr.
T-rating = 0 Hr.

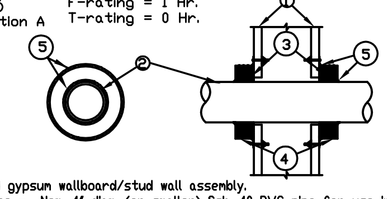

① Pre-rated gypsum wallboard/stud wall assembly.
② Plastic Pipe - Nom. 4" diam. (or smaller) Sch. 40 PVC pipe for use in open or closed piping systems. See table below for annular space requirements.
③ TREMstop WS - Intumescent wrap strips, continuosly wrapped around the outer circumfereence of the pipe on both sides of wall assembly.

Nom. pipe Diam. (in.)	Pipe Type	Max. annular Space (in.)	Min. No. of Wrap Strips Layers
1-1/2	PVC	1/16	3
2	PVC	3/16	3
3	PVC	1/8	4
4	PVC	1/8	6
4	PVC	3/8	7

④ TREMstop MCR - Prefabricated steel collar wrapped over the wrap strips (Item 3) and mechanically fastened to both sides of the wall assembly.
⑤ FYRE-SIL - Min. 1/4" thickness of sealant applied at the interface of the wall and collar, and the interface of the collar and pipe. Sealant applied on both sides of wall.

The products used in the above assembly have been tested in accordance with the following:
- ASTM E814 (UL1479) Standard Test Method for Through Penetration Firestopping

1 or 2 Hour Fire Rated Through Penetration Firestop for Single Metal Pipe through Gypsum walls using TREMstop VBM.

Drawing not to scale

WL1051

F-rating = 1 and 2 Hr.
T-rating = 0 and 1/2 Hr.

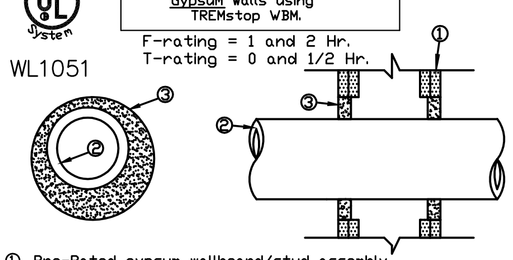

① Pre-Rated gypsum wallboard/stud assembly
② Metallic Pipe- A) Steel Pipe - 6" diam.(or smaller) Sch. 40 (or heavier) steel pipe.
B) Conduit - 4" diam.(or smaller) EMT or rigid steel conduit.
③ TREMstop VBM - Min. thickness of sealant from table below, applied within opening flush with both sides of wall assembly.

Pipe or Conduit	Annular Space (in.)	Min. sealant Thickness (in.)	F Rating (Hr.)	T Rating (Hr.)
Pipe	3/4	1 - 1/4	2	1/2
Conduit	3/4	3/4	1	0

• The products used in the above assembly have been tested in accordance with the following: ASTM E814 (UL1479) Standard Test Method for Through Penetration Firestopping.

FIRE RATED PIPE PENETRATION DETAIL

NO SCALE

FIRE ALARM SYSTEM NOTES

1 CONTRACTOR SHALL PRODUCE SHOP DRAWINGS AND SUBMIT SIX COPIES TO THE ENGINEER PRIOR BEGINNING ANY WORK. SHOP DRAWINGS SHALL SHOW A UNIQUE DEVICE NUMBER AT FLOOR PLAN THAT MATCHES WITH THE RISER DIAGRAM FOR ALL DEVICES. SHOP DRAWING SHALL ALSO SHOW WIRES, CONDUCTOR TYPES, RACEWAY LOCATIONS AND SIZES, EQUIPMENT CATALOG NUMBERS, BATTERY CALCS., AND DESCRIPTIONS CLEARLY HIGH-LIGHTED TO SPECIFICALLY INDICATE WHICH PRODUCTS ARE PROPOSED FOR USE. AFTER SATISFACTORY REVIEW BY THE ENGINEER, THE CONTRACTOR SHALL SEEK APPROVAL BY THE FIRE MARSHALL. AFTER SATISFACTORY REVIEW BY THE FIRE MARSHALL WORK SHALL COMMENCE.

2 ALL COMPONENTS SHALL BEAR THE U. L. LABEL FOR FIRE SERVICE USE AND SHALL BE COMPATIBLE FOR USE WITH ALL INTERCONNECTING EQUIPMENT.

3. THE COMPLETE SYSTEM SHALL BE INSTALLED IN ACCORDANCE WITH THE MANUFACTURER'S RECOMMENDATIONS, N.E.C., N.F.P.A., A.D.A., ANSI, F.B.C., AND ALL LOCAL CODES.

4. HORNS AND SPEAKERS SHALL BE OF SUCH CHARACTER AND SO LOCATED, AS TO BE CLEARLY HEARD THROUGHOUT AND ABOVE AMBIENT NOISE LEVELS, db LEVELS SHALL BE SET PER NFPA 72.

5. MINIMUM CONDUIT SIZE SHALL BE 1/2" FOR ALL RUNS. CONDUIT SHALL LOOP ALL DEVICES AND RETURN TO F.A.C.P.

6. ALL CONDUCTORS SHALL BE COPPER AND SHALL BE SIZED FOR NO MORE THAN 1 dB LOSS. MINIMUM #18 AWG AND #14 AWG FOR HORN AND/OR STROBE CIRCUITS.

7. CONDUCTOR INSULATION FOR CABLES SHALL BE TYPE TFN. IF CABLES PENETRATE INTO OR THROUGH PLENUM AREAS USED FOR TRANSFER OF ENVIRONMENTAL AIR, THEY SHALL BE TYPE FPLP, TEFLON INSULATED TYPE.

8. THE CONTRACTOR SHALL FURNISH AND INSTALL ALL EQUIPMENT, CONDUIT SYSTEM, CON- DUCTORS, DEVICES, ETC., AND ALL OTHER ACCESSORIES REQUIRED FOR AN ACCEPTABLE AND FULLY FUNCTIONAL SYSTEM.

9. FINAL CONNECTIONS BETWEEN EQUIPMENT AND WIRING SYSTEM SHALL BE MADE UNDER DIRECT SUPERVISION OF A QUALIFIED TECHNICAL REPRESENTATIVE OF THE EQUIPMENT MANU- FACTURER, WHO SHALL TEST THE SYSTEM COMPLETELY AND PROVIDE A CERTIFICATE IN WRITING AS TO THE PROPER INSTALLATION AND OPERATION OF THE FIRE ALARM SYSTEM PRIOR TO FINAL ACCEPTANCE OF THE SYSTEM BY THE OWNER.

10. AS-BUILT DRAWINGS SHOWING POINT BY POINT CONNECTIONS OF ALL DEVICES AND FINAL EQUIPMENT LOCATIONS SHALL BE GIVEN TO THE OWNER UPON ACCEPTANCE OF INSTALLATION BY THE OWNER.

11. ALL EQUIPMENT SHALL BE BY FCI OR APPROVED EQUAL.

12. CONTRACTOR SHALL SUBMIT FIRE ALARM SYSTEM SHOP DRAWINGS, INCLUDE TECHNICAL DATA SHEETS TO BUILDING DEPARTMENT THAT COMPLY WITH FIRE MARSHAL'S OFFICE FIRE ALARM SYSTEM INSTALLATION REQUIREMENTS. FOR APPROVAL PRIOR TO INSTALLATION.

13. ALL DUCT SMOKE DETECTORS SHALL INITIATE A TROUBLE/SUPERVISORY SIGNAL IN THE FIRE ALARM SYSTEM NOT A FULL ALARM.

NOTES

① SYSTEM SHALL BE ADDRESSABLE MICRO-PROCESSOR BASED WITH POINT ANNUNCIATION. NOTIFIER
② NOT USED
③ INSTALL SYSTEM AS DIRECTED BY MANUFACTURERS APPROVED SHOP DRAWINGS.
④ PROVIDE 1/2" CONDUIT TO TELEPHONE WOOD BACKBOARD FOR CONNECTION TO ALARM COMMUNICATIONS TRANSMITTER.
⑤ PROVIDE SILENT KNIGHT AUTO DIALER #5104.

NOTE:
ALARM STROBES AND HORNS ARE NOT BE ON THE SAME ANNUNCIATION CIRCUIT. ALARM STROBES SHALL BE ACTIVATED ON THE GENERAL ALARM AND SHALL REMAIN ON UNTIL THE FACP IS RESET.

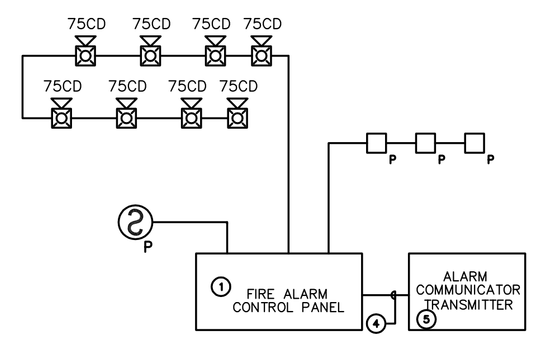

FIRE ALARM RISER DIAGRAM

FIRE ALARM LEGEND

P	FIRE ALARM MANUAL PULL STATION
WP	WEATHERPROOF FIRE ALARM HORN/STROBE COMBINATION
	FIRE ALARM HORN / STROBE COMBINATION
	FIRE ALARM STROBE
	FIRE ALARM HORN
P	PHOTOELECTRIC SMOKE DETECTOR, ADDRESSABLE
DD	DUCT SMOKE DETECTOR, ADDRESSABLE,
SA	PHOTOELECTRIC SMOKE ALARM AND CARBON MONOXIDE COMBO, ADDRESSABLE
A/F	HEAT DETECTOR, FIXED TEMPERATURE (135°).
FS	FIRE ALARM FLOW SWITCH
TS	FIRE ALARM TAMPER SWITCH
R	CONTROL RELAY
FACP	FIRE ALARM CONTROL PANEL. ADDRESSABLE
FAAP	FIRE ALARM ENUNCIATOR PANEL

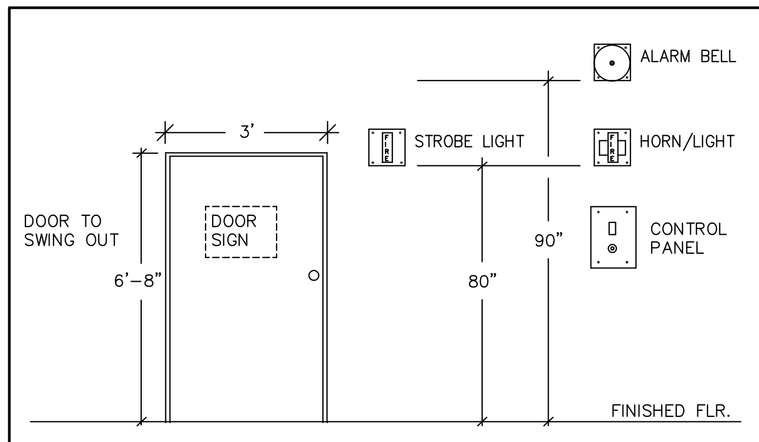

TYPICAL WALL ELEVATION

N.T.S.

CONSTRUCTION NOTES:

1 ALARMS IN THE ROOMS ARE INTENDED TO BE SMOKE ALARM SINGLE STATION AS PER NFPA 28.3.4.5. TO SOUND WITHIN THE ROOM NFPA 9.6.2.10.4. TYPICAL ENTIRE BUILDING.

2 PROVIDE AUDITORY, VISUAL AND TACTILE NOTIFICATION APPLIANCE (BEDSHAKE) FIRE ALARM DIVICES TO ALL UNIT DESIGN TO BE USED BY HEARING DEFICIENCIES GUEST.

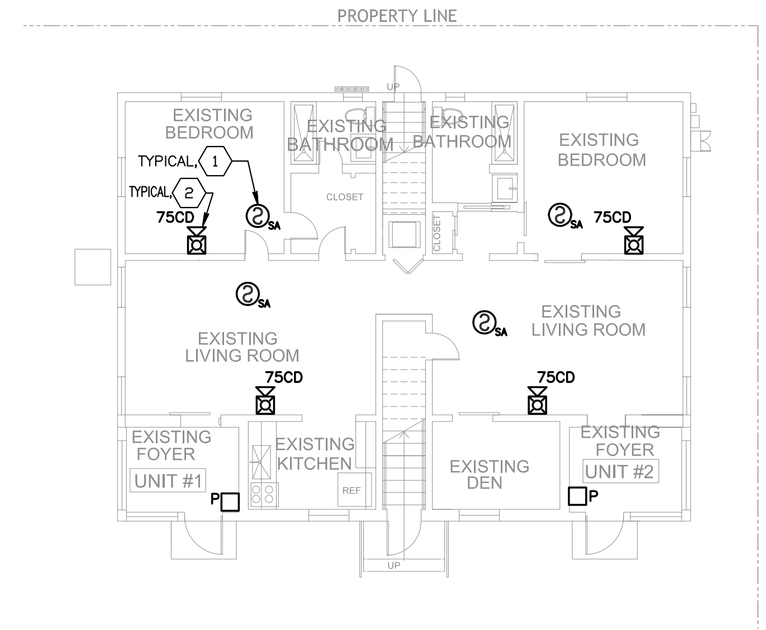

1 FIRE ALARM GROUND FLOOR PLAN

SCALE : 1/8" = 1'-0"

N

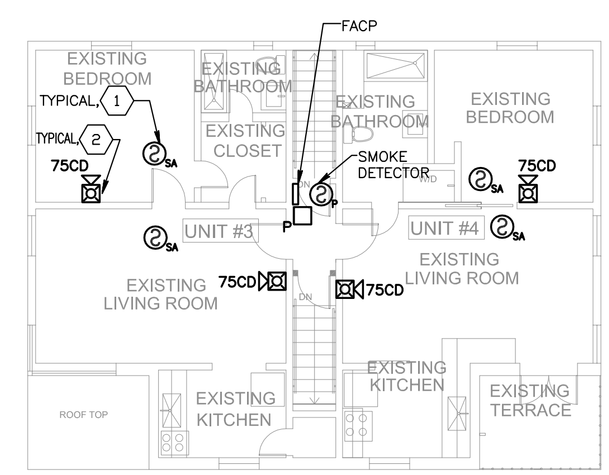

1 FIRE ALARM SECOND FLOOR PLAN

SCALE : 1/8" = 1'-0"

N

CLIENT :

241 77 STREET

Issued for Permitting

241 77 street
Miami Beach, FL 33141

CASTELLANOS DESIGN STUDIO

407 LINCOLN ROAD, SUITE 2C
MIAMI BEACH, FL 33139
Tel: 786.218.5335
License #AA 26002467
WWW.CASTELLANOSDESIGN.COM

No.	DATE	ISSUED / REVISED
1	17 FEB/15	PERMITTING
	12-03-15 RTC	1

ALL DRAWN AND WRITTEN MATERIAL CONTAINED HEREIN IS THE SOLE PROPERTY OF CASTELLANOS DESIGN STUDIO, LLC. AND MAY NOT BE DUPLICATED, PUBLISHED, DISCLOSED OR USED WITHOUT EXPRESS WRITTEN CONSENT OF CASTELLANOS DESIGN STUDIO, LLC.

THE DRAWINGS ARE SCOPE DOCUMENTS WHICH INDICATE THE GENERAL SCOPE OF WORK, AND SUCH, DO NOT NECESSARILY DESCRIBE ALL WORK REQUIRED FOR THE FULL PERFORMANCE AND COMPLETION OF THE WORK. GENERAL CONTRACTOR IS TO FURNISH AND INSTALL ALL ITEMS REQUIRED FOR THE PROPER COMPLETION OF ITS WORK WITHOUT ADJUSTMENT TO THE CONTRACT AMOUNT UNLESS SCOPE OF WORK CHANGES FROM THAT INDICATED ON THE DRAWINGS. IN THE EVENT OF A CONFLICT WITHIN OR AMONG THE CONTRACT DOCUMENTS, THAT DOCUMENT PLACING THE GREATEST BURDEN UPON GENERAL CONTRACTOR SHALL GOVERN. THE GENERAL CONTRACTOR SHALL CAREFULLY STUDY AND COMPARE ALL DRAWINGS, REPORTING ANY ERROR, INCONSISTENCY OR OMISSION HE MAY DISCOVER AND REPORT TO CDS AND IN NO CASE SHALL PROCEED IN UNCERTAINTY.

SEAL :

WESLEY ART CASTELLANOS
FLORIDA ARCHITECT LICENSE AR 96133

PROJECT NO : 2014-32

FIRE ALARM PLAN

CHECKED BY : A.R.
DRAWN BY : A.R.
SCALE: AS NOTED
© 2015 BY CDS

SHEET NO :

FA-1.1

JOB # 15-0902

arpe engineering inc
Gables International Plaza
2655 Le Jeune Road, Suite 1109
Coral Gables, Florida 33134
Phone > 305 444 9809
Fax > 305 444 9827

Engineering Design:
> Mechanical > Electrical
> Plumbing > Fire Protection
www.arpe-eng.com

Amarilis Rodriguez, P.E.
License Number 60236
C.A. 26359

Signature _____
Date _____