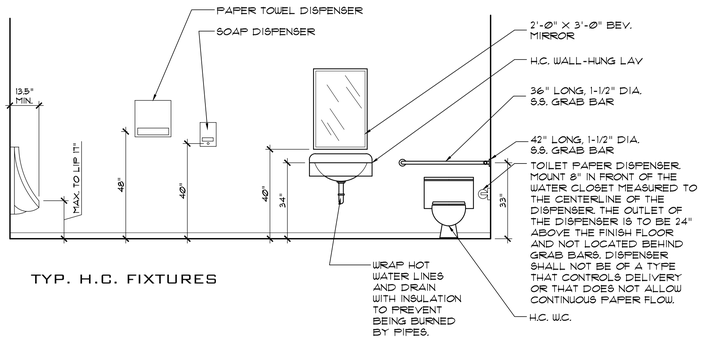

TYP. H.C. FIXTURES

FINISH SCHEDULE

ROOM NAME	ROOM #	FLOORS	WALLS	BASE	CEILING	CEILING HEIGHT	COMMENTS
TASTING ROOM	101	EXISTING	EXISTING	EXISTING	EXISTING	10'-4" H. CLG.	-
MEN'S RESTROOM	102	NON-SKID TILE AS SELECTED BY OWNER	X	X	X	8'-6" H. CLG.	-
WOMEN'S RESTROOM	103	NON-SKID TILE AS SELECTED BY OWNER	X	X	X	8'-6" H. CLG.	-
STORAGE	104	NON-SKID TILE AS SELECTED BY OWNER	X	X	X	8'-6" H. CLG.	-
BREWERY	105	NON-SKID TILE AS SELECTED BY OWNER	TILE AS SELECTED BY OWNER	X	EXISTING	VARIES	-
PRIVATE TASTING	106	EXISTING	EXISTING	EXISTING	EXISTING	8'-6" H. CLG.	-
STAIR	107	EXISTING/xxxx STAIR TREADS	EXISTING	EXISTING	EXISTING	VARIES	-
GAME ROOM	108	EXISTING	EXISTING	EXISTING	EXISTING	8'-6" H. CLG.	-
STORAGE	109	EXISTING	EXISTING	EXISTING	EXISTING	8'-6" H. CLG.	-
WALK-IN COOLER	110	X	X	X	X	8'-6" H. CLG.	-
WALK-IN COOLER	111	X	X	X	X	8'-6" H. CLG.	-
WALK-IN FREEZER	112	X	X	X	X	8'-6" H. CLG.	-
BAR	113	NON-SKID TILE AS SELECTED BY OWNER	EXISTING	EXISTING	EXISTING	10'-4" H. CLG.	-

GENERAL FINISH NOTES:
- INTERIOR FINISHES MINIMUM CLASS B FLAMESPREAD 26-75 SMOKE DEVELOPED 0-450

EQUIPMENT SCHEDULE

ITEM	QTY.	EQUIPMENT TYPE	MANUFACTURER	MODEL NO.
B1	1	BEVERAGE COOLER	TRUE	TBB-24GAL-48G-S-LD
B2	1	WINE COOLER	EURODIB	MH 54 DZ
B3	1	KEGERATOR	X	X
B4	1	KEGERATOR	X	X
B5	1	HANDWASH SINK	X	X
B6	1	THREE COMPARTMENT SINK	REGENCY	600B31014219
B7	1	WARE WASHER	NOBLE	NOBLE II
B8	1	HANDWASH SINK	X	X
B9	1	HANDWASH SINK	X	X
B10	1	HANDWASH SINK	X	X

BREWERY EQUIPMENT SCHEDULE

ITEM	EQUIPMENT TYPE	X	X
E1	PILOT SYSTEM		
E2	I WT		
E3	MASH/LAUTER		
E4	BOILING/WHIRLPOOL TUN		
E5	HTU		
E6	FERMENTER VESSEL		
E7	BRITE BEER TANK		
E8	BRITE BEER TANK		
E9	BRITE BEER TANK		
E10	BRITE BEER TANK		
E11	FERMENTER VESSEL		
E12	BRITE BEER TANK		
E13	FERMENTER VESSEL		
E14	FERMENTER VESSEL		
E15	FERMENTER VESSEL		
E16	FERMENTER VESSEL		
E17	BRITE BEER TANK		
E18	BRITE BEER TANK		
E19	CHILLER		
E20	GLYCOL CHILLER		
E21	CONTROL PANEL		
E22	FERMENTER VESSEL		
E23	FERMENTER VESSEL		
E24	FERMENTER VESSEL		

NOTE: DRINKING WATER TO BE PROVIDED AT BAR ON REQUEST.

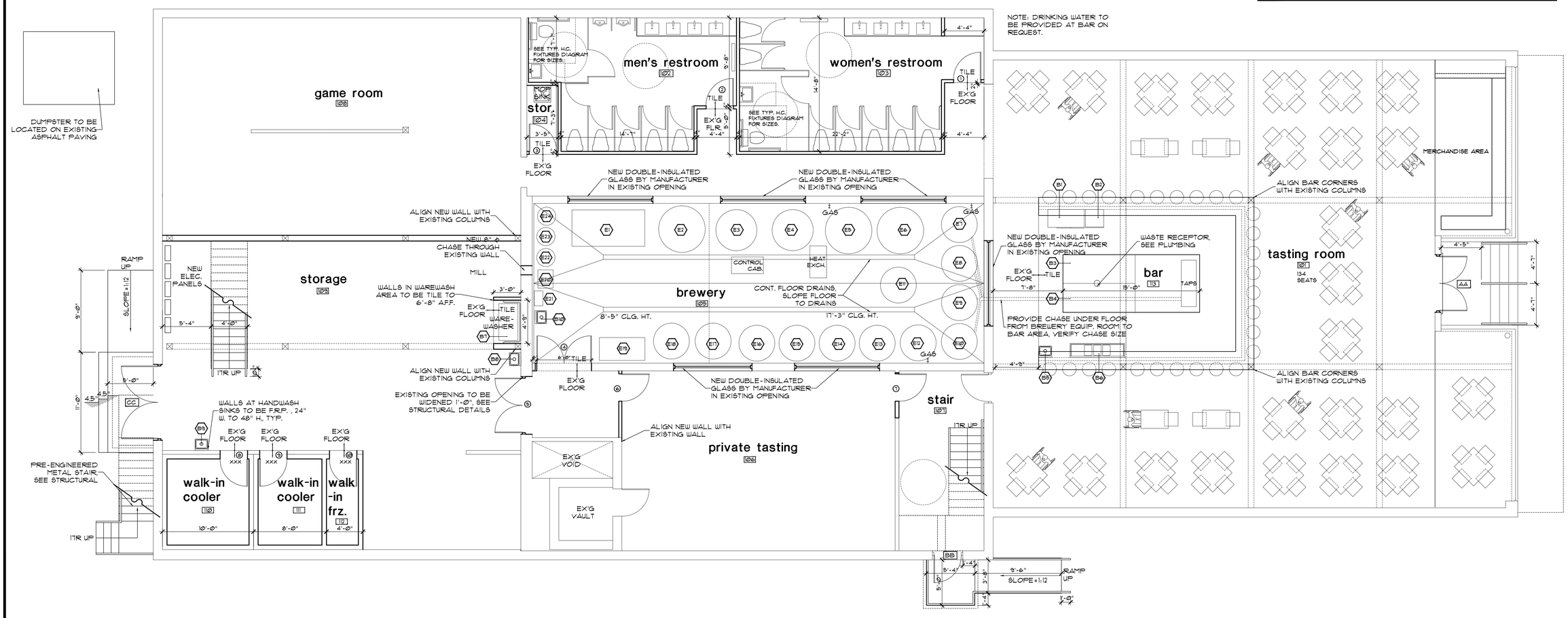

SCHEMATIC FIRST FLOOR PLAN

SCALE: 3/16"=1'-0"

meD studio ARCHITECTURE

587 W. EAU GALLIE BLVD.
MELBOURNE, FL 32935
321.574.2705
design@meldstudioarchitecture.com

JOB #:	B-2015-003
DRAWN:	LAT
CHECKED:	LAT

	DATE
■ SD	05.27.15
☐ DD	-
☐ BID	-
☐ PERMIT	-
☐ CD	-

REVISIONS:
1
2
3
4
5
6

HELL N' BLAZES BREWING COMPANY
1002 E. NEW HAVEN AVE.
MELBOURNE, FL. 32901

SEAL

LOIS A. TORVIK
LICENSE NO. AR0093905

SHEET TITLE

SHEET NUMBER