TO THE

FLORIDA BUILDING COMMISSION

REQUEST FOR

DECLARATORY STATEMENT

FOR FUTURE USE

BY

LAWN STORAGE MANUFACTURERS

UNDER

DEPARTMENT OF COMMUNITY AFFAIRS

MANUFACTURED (MODULAR) BUILDING PROGRAM

DCA08-DEC-357

FILING AND ACKNOWLEDGEMENT
FILED, on this date, with the designated Agency Clerk, receipt of which is hereby acknowledged.

12/22/08

Miriam Snipes — Date
Deputy Agency Clerk

Prepared By

Fred S. Cardwell, P.E.

1000 S. Belcher Road, A#11

Largo, Florida 33771

December 18, 2008

FRED S. CARDWELL *Professional Engineer • Land Surveyor*

1000 S. Belcher Road · Bldg. A, Unit #11 · Largo, Florida 33771 · Phone (727) 524-1905 · Fax (727) 524-1299

December 18, 2008

Mr. Mo Modani
State of Florida
Department of Community Affairs
2555 Shumard Oak Blvd.
Tallahassee, FL 32399-2100

Dear Mo:

REF: Declaratory Statement

Please review the following Code information and provide me with a Declaratory Statement for use by eight (8) of my clients on this subject matter:

1. **SECTION 1017 EXITS**

   1017.1 General. Exits shall comply with Sections 1017 through 1022 and the applicable requirements of Section 1003 through 1012. an exit shall not be used for any purpose that interferes with its function as a means of egress. Once a given level of exit protection is achieved, such level of protection shall not be reduced until arrival at the exit discharge.

2. **1017.2 Exterior Exit Doors.** Buildings or structures **used for human occupancy** shall have at least one exterior door that meets the requirements of Section 1008.1.1.

3. **1008.1.1. Size of Doors** See yellowed areas of attached.

Enclosed are the copies of a letter to Mr. Roy Borrows CPE of Leon County Building Department. Also, a letter to my client, Mr. Terry Boyette of Southern Storage Solutions as to my opinion of the 80 inch high door.

4. Mr. Douglas Oliver, General Manger of Cook Portable Warehouses in Valdosta, Georgia:

   Mr. Oliver has asked me to remove the word underlayment from his modular sheds. Enclosed are the sections of the 2004 Code dealing with underlayment. Also, enclosed is a letter from ATLAS ROFFING CORPORATION which states "the installation of an underlayment is optional". I am enclosing reports and data from U.L., Construction Materials, Dade County Notice of Acceptance (NOA).

THE QUESTION:

Does the letter from Atlas Roofing Corporation over ride the Building Code or vise-versa? If the Building Code over rides the Atlas letter, does this mean that the warranty by Atlas is voided?

Your review of these two (2) questions and a declaratory statement on each would be greatly appreciated.

Sincerely,

Fred S. Cardwell
Registered Engineer # 15607
State of Florida

FRED S. CARDWELL

Professional Engineer • Land Surveyor

1000 S. Belcher Road · Bldg. A, Unit #11 · Largo, Florida 33771 · Phone (727) 524-1905 · Fax (727) 524-1299

ADDENDUM

DCA08-DEC-357

November 18, 2008

FILING AND ACKNOWLEDGEMENT
FILED, on this date, with the designated Agency Clerk, receipt of which is hereby acknowledged.

Miriam Snipes
Deputy Agency Clerk

12/23/08
Date

Florida Building Commission
Department of Community Affairs
Sodowski Building
2555 Shumard Oaks Blvd.
Tallahassee, FL 32349-2100

To Whom It May Concern:

REF: Chapter 15, F.B.C.
Roof Assemblies and Rooftop Structures

SECTION: 1502.1 GENERAL

UNDERLAYMENT

One or more layers of felt, sheathing paper, non-bituminous saturated felt or other approved material over which a steep-slope roof covering applied.

SECTION 1507

REQUIREMENTS FOR ROOF COVERING

1507.1 Scope
Roof coverings shall be applied in accordance with the applicable provisions of this section and the manufacturer's installation instructions.

1507.2 Asphalt Shingles
The installation of asphalt shingles shall comply with the provisions of this section.

1507.2.1 Deck Requirements
Asphalt shingles shall be fastened to solidly sheathed decks.

Table 1507.2. Reserverd.

1507.2.2 Slope
Asphalt shingles shall only be used on roof slopes of two units vertical in 12 units horizontal (17-percent slope) or greater. For roof slopes from two units vertical in 12 units horizontal (17-percent slope) up to four units vertical in 12 units horizontal

(33-percent slope), double underlayment application is required in accordance with Section 1507.2.8

1507.2.3 Underlayment
Unless otherwise noted, required underlayment shall conform to ASTM D 226, Type I or Type II, or ASTM D 4869 Type I or Type II>

1507.2.8 Underlayment Application
For roof slopes from two units vertical in 12 units horizontal (17-percent slope), up to 4 units vertical in 12 units horizontal (33-percent slope), underlayment shall be two layers applied in the following manner. Apply a minimum 19-inch-wide (483 mm) strip of underlayment felt parallel with and starting at the eaves, fastened sufficiently to hold in place. Starting at the eave, apply 36-inch-wide (914 mm) sheets of underlayment overlapping successive sheets 19 inches (483 mm) and fastened sufficiently to hold in place. For roof slopes of four units vertical in 12 units horizontal (33-percent slope) or greater, underlayment shall be one layer applied in the following manner. Underlayment shall be applied shingle fashion, parallel to and starting from one eave and lapped 2 inches (51 mm), fastened only as necessary to hold in place.

Enclosed is a copy from ATLAS ROOF CORPORATION, sating:

- The installation of an underlayment is optional (marked in Yellow).

The letter also states that certain types of shingles have FLORIDA APPROVAL NUMBERS.

THE QUESTION:

#1 Based on slopes of 12/2 = 29.74488 degrees, and 4/12 = 18.43495 degrees require underlayment for utility lawn storage sheds.

#2 As an engineer registered in the State of Florida be required to show on his plans underlayment per code /or not show underlayment as per Atlas Roofing Corporation's letter, which is enclosed.

#3 Section 1003 general means of egress 1003.3.1 headroom.
1003.3.1 Headroom
Protruding objects are permitted to extend below the minimum ceiling height required by Section 1003.2 provided a minimum headroom of 80 inches (2032 mm) shall be provided for any walking surface, including walks, corridors, aisles and passageways. Not more than 50 percent of the ceiling area of a means of egress shall be reduced in height by protruding objects.

In Utility Lawn Storage Sheds, doors are 6'0" or 72" high, except garage doors which are 7'0" or 84".

Does the Utility Lawn Storage Shed need to comply with 1003.1 for minimum headroom of 80"?

I would appreciate your written interpretation in order that my clients will have a written opinion of these three (3) questions.

I am also sending a letter to the Engineering Board as to an option on liability and/or disciplinary action to me by the Board of Engineers.

Sincerely,

Fred S. Cardwell
Registered Engineer # 15607
State of Florida

ATLAS ROOFING CORPORATION

Nov. 2008

To Whom It May Concern:

Re: Cook Portable Warehouses.

This letter applies to all currently produced asphalt roof shingles manufactured by Atlas Roofing Corporation.

The Atlas Limited Shingle Warranty will remain in effect per the following installation practices as followed by Cook Portable Warehouse sales.

- A six (6) nail application per shingle is used.
- The deck slope will be greater than 2" in 12" slope with a normal 4" in 12" slope.
- The installation of an underlayment is optional. When an approved underlayment is installed, the Fire Classification will be "Class A". If an underlayment is not installed, the Fire Classification will be a "Class C".
- Apply a continuous bead of asphalt adhesive both under the starter strips along the eave edges and under the shingle overlaps along the rake edges of the roof, to prevent wind damage in transit.
- Double nail the first 18" of the rake edge shingles to also prevent blow-offs during transit.

Atlas Roofing Corporation has third party testing documentation which apply to the following specific **Atlas Roofing Corporation** product line of asphalt roofing products, as indicated.

- **StormMaster Slate** - UL 2218 - Class 4 Impact Resistant, ASTM D7158 (includes, UL 2390 - Class H 150 mph, ASTM D 6380, ASTM D3161 - Class F @ 110 mph, ASTM E108 - Class A, ASTM D3018 – Class a Fire Resistant, ASTM D3462), **FL# 9792**.
- **StormMaster LM** - UL 2218, Class 4 Impact Resistant, UL 2390 - Class H, 150 mph Wind Resistance, ASTM D3161 - Class F @ 110 mph, ASTM D3018, ASTM D108 - Class A Fire Resistant, ASTM 3462. **FL # 784**.
- **StormMaster Pro-Cut Hip and Ridge** - Complies with the field shingle product with which they are installed. **FL# 784**.
- **Pinnacle 35** - Tested to and complies with the ASTM D7158 at 150 mph. - Class H, ASTM D 3161, to 110 mph. Class F, ASTM D 3018, ASTM D 108, Class A Fire Resistant, ASTM D 3462. **FL#784**.

2000 RIVEREDGE PARKWAY · SUITE 800 · ATLANTA, GEORGIA 30328

- **Chalet and Stratford** – Tested to and complies with ASTM D 7158 at 150 mph. - Class H, ASTM D 316, Class F, ASTM D 3108, ASTM D 108 - Class A fire Resistant, ASTM D 3462., **FL# 784**.
- **Glass Master 25** – Tested to and complies with ASTM D 7158 - Class H at 150 mph., ASTM D 3161 Class F to 110 mph., ASTM D 3108, ASTM D 108 - Class A Fire Resistant, ASTM D 3462. CSA – 123.5 – M-90, **FL# 784**.

This information is also imprinted on the packaging of all the products noted here.

Sincerely,

Ed Todd
Director of Product Management
Atlas Roofing Corporation

FRED S. CARDWELL *Professional Engineer • Land Surveyor*
1000 S. Belcher Road • Bldg. A, Unit # 11 • Largo, Florida 33771 • Phone (727) 524-1905 • Fax (727) 524-1299

January 12th, 2009

Mr. Mo Modani
Florida Building Commission

DCA08-DEC-357

Ref: Amendment to Request of December 18, 2008

Dear Mo:

As per our conversation of Friday January 9, 2009 please accept this as per the subject matter listed above.

Section 1017 Exits:
When anyone of my shed clients constructs a barn type buildings the door exit of 80 inches CAN NOT BE MADE when the side wall height is any where between 45 inches and 75 inches. An 80 inch door will not fit in a 75 inch space, with a top plate.

A 6 foot width and 8 foot width with a 45 inch sidewall based on the roof slope you can only get a 4'-6" door to work. SEE SHEET A-6.

For a 10 foot and 12 foot width with a 45 inch sidewall based on roof slope you can only get a 6'-0" high door. SEE SHEET A-7.

A 13'-6" barn is the same as the 10 foot and 12 foot width building. SEE SHEET A-8.

The raised barn drawing at 13'-6" and a 75 inch wall gives you 83 inches between the finished floor and the collar tie. SEE SHEET A-9.
When you put a top plate on the wall stud it reduces the clear distance to 73 ½ inches which is less than 80 inches. SEE SHEET A-10, A-11 &A-12.
On sheet A-13 for an "A" gable the same condition exists.
SHEETS A-14, A-15 & A-16. Shows the "A" gable wall height of 93 inches. Please note the door height is 6'-8" which equals 80 inches.

The request for a 6 foot high door is only for the barns not the 93 inch wall height building.

The request for a Declaratory Statement is for the following clients who build barn style lawn storage sheds of which I am the Engineer of Record

1. Southern Storage Solutions
2. Lark Builders
3. Handi-House Sheds
4. Better Built Buildings
5. Advantage Portable Buildings

FILING AND ACKNOWLEDGEMENT
FILED, on this date, with the designated Agency Clerk, receipt of which is hereby acknowledged.

Miriam Snipes 1/13/09
Deputy Agency Clerk Date

6. Cook Portable warehouses
7. Atlas Portable Buildings, Inc.
8. Colcraft, Inc.
9. Consolidated Industries LLC
10. Southeast Portable Buildings
11. Twin City Quality Buildings
12. Wooley Sheds Inc.

ROOF UNDERLAYMENT:

The information on underlayment is requested by the material sent to you on December 18, 2008.

If the underlayment is NOT REQUIRED OR IS OPTIONAL.

Does this mean that by requiring underlayment for lawn storage sheds IT VOIDS THE WARRANTY BY THE SHINGLE MANUFACTURER.

GENERAL INFORMATION:
The sheds manufactured (built or constructed) the above 12 clients I have reviewed their general request for prints being used. It is my opinion that 92% are installed in back yards of single family residential homes. The 8% of sheds are used by commercial establishments such as, McDonalds, Wendy's, Burger King, and Contractors to store supplies and Equipment.

Sincerely

Fred S. Cardwell
Registered Engineer #15607
State of Florida

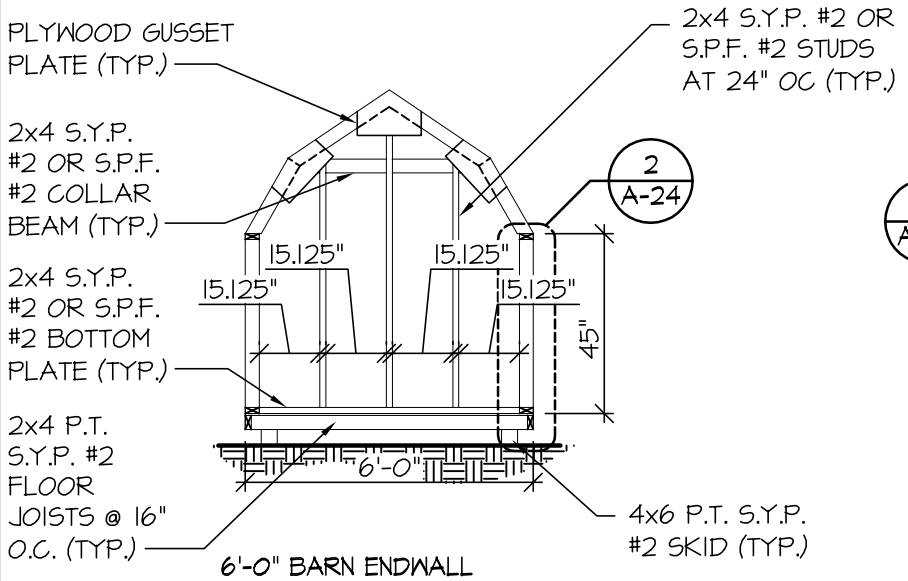

6'-0" BARN ENDWALL WITH NO OPENINGS

6 A-6 FRAMING ELEVATION

SCALE: 1/4" = 1'-0"

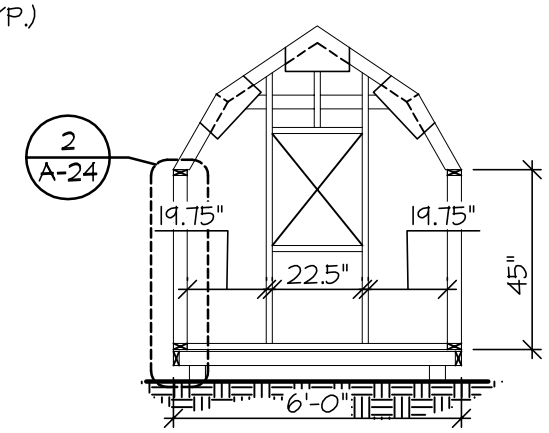

6'-0" BARN ENDWALL WITH WINDOW

5 A-6 FRAMING ELEVATION

SCALE: 1/4" = 1'-0"

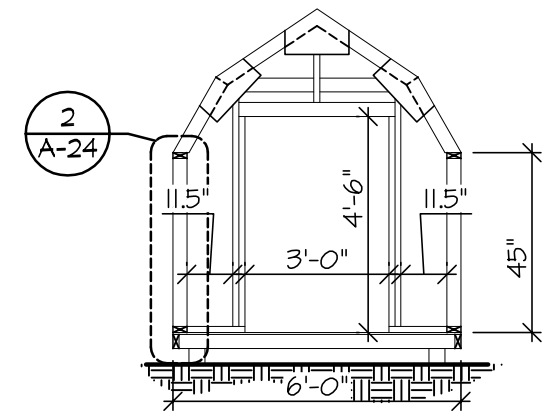

6'-0" BARN ENDWALL WITH DOOR

4 A-6 FRAMING ELEVATION

SCALE: 1/4" = 1'-0"

NOTE:

1. STUD SPACING NOT TO EXCEED 24"

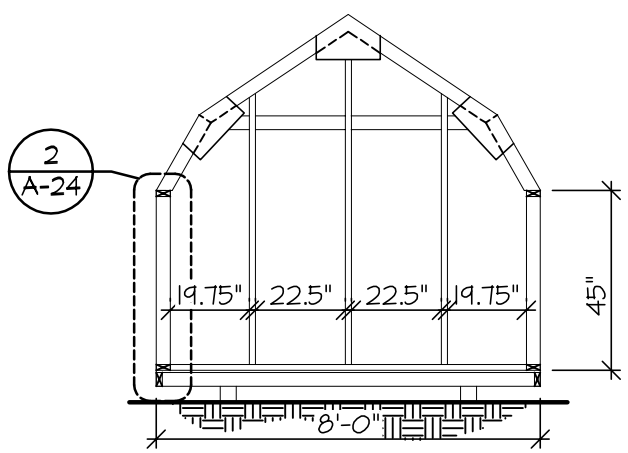

8'-0" BARN ENDWALL WITH NO OPENINGS

3 A-6 FRAMING ELEVATION

SCALE: 1/4" = 1'-0"

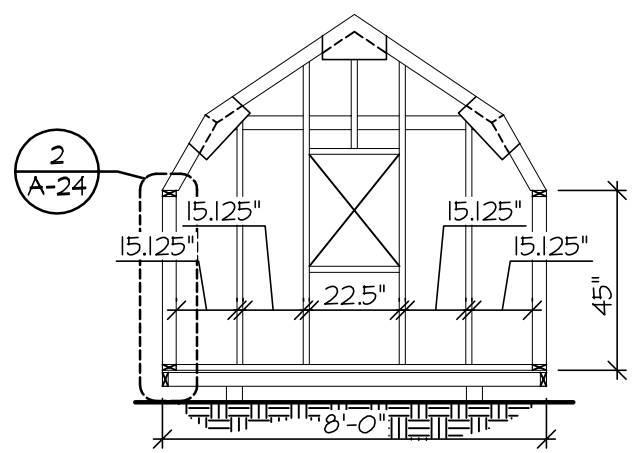

8'-0" BARN ENDWALL WITH WINDOW

2 A-6 FRAMING ELEVATION

SCALE: 1/4" = 1'-0"

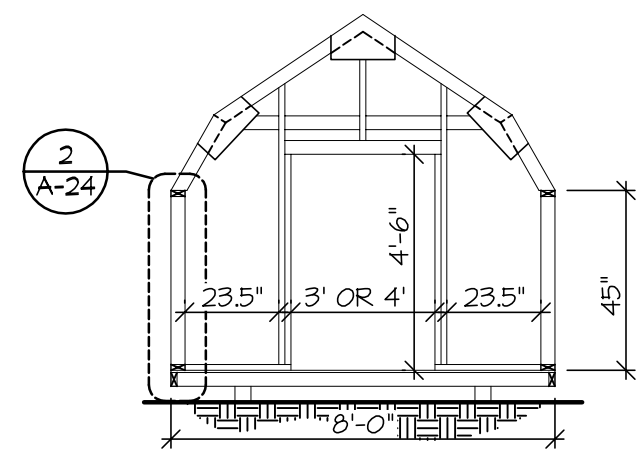

8'-0" BARN ENDWALL WITH DOOR

1 A-6 FRAMING ELEVATION

SCALE: 1/4" = 1'-0"

AREA FOR APPROVAL STAMPS

REV	BY	DATE	DESCRIPTION

THESE PLANS WERE DESIGNED IN ACCORDANCE WITH THE 2007 FLORIDA BUILDING CODE FOR A THREE SECOND GUST OF 140 MPH.

FRED S. CARDWELL, P.E., P.L.S.

ALABAMA# 14469
GEORGIA# 14241

FLORIDA# 15607
INDIANA# 20338
LOUISIANA# 20548
MISSISSIPPI# 8925
N. CAROLINA# 11108
TEXAS# 54100

1000 SOUTH BELCHER ROAD
BLDG-A / UNIT #11 LARGO,
FLORIDA 33771
VOICE: 727-524-1905
FAX: 727-524-1299

SOUTHERN STORAGE SOLUTIONS
PORTABLE STORAGE SHEDS
2504 BETTON WOODS DR.
TALLAHASSEE, FLORIDA 32312-3442
(850) 536-5843

BUILDING DETAILS

THIS DRAWING IS NOT VALID UNLESS SIGNED IN PURPLE INK.

DATE:	1/10/09
DRAWN BY:	KMS
CHECKED BY:	FSC
SCALE:	AS NOTED
W.O. NO:	418-010

SHEET

A-6

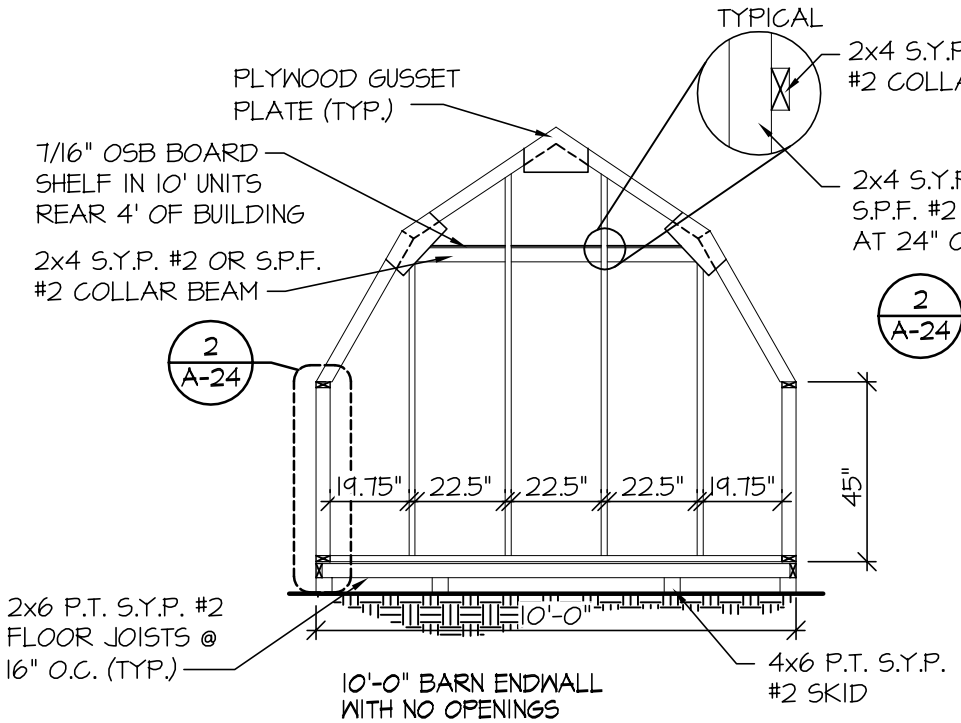

10'-0" BARN ENDWALL WITH NO OPENINGS

6 A-7 FRAMING ELEVATION

SCALE: 1/4" = 1'-0"

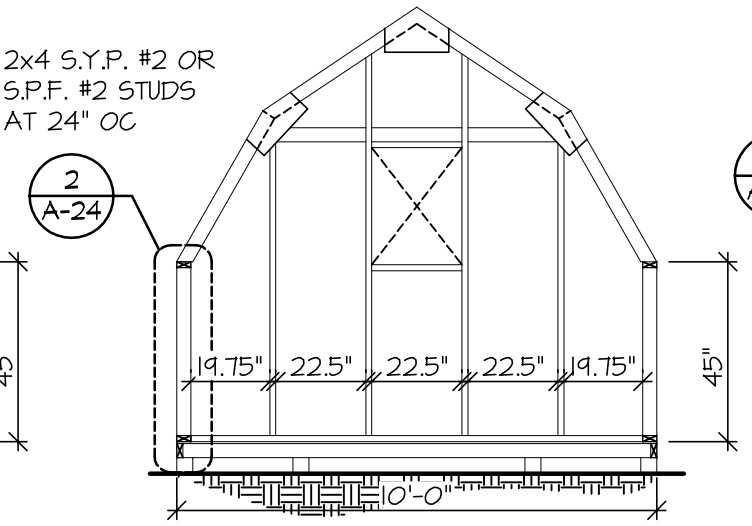

10'-0" BARN ENDWALL WITH WINDOW

5 A-7 FRAMING ELEVATION

SCALE: 1/4" = 1'-0"

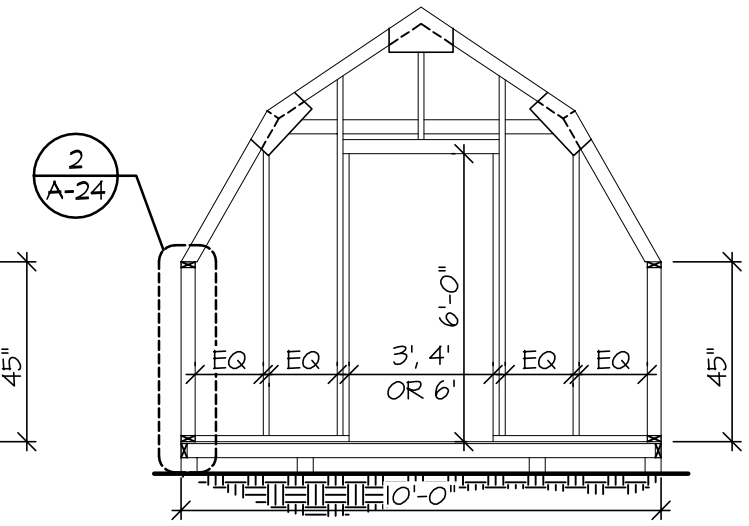

10'-0" BARN ENDWALL WITH DOOR

4 A-7 FRAMING ELEVATION

SCALE: 1/4" = 1'-0"

NOTE:

1. STUD SPACING NOT TO EXCEED 24"

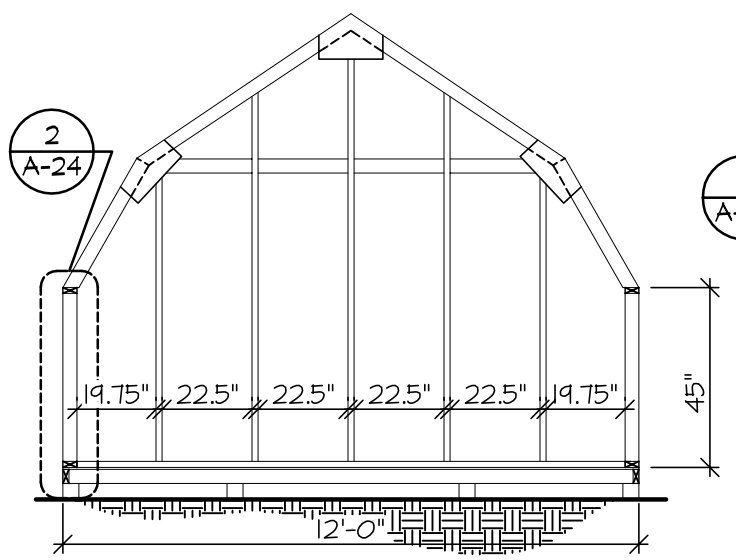

12'-0" BARN ENDWALL WITH NO OPENINGS

3 A-7 FRAMING ELEVATION

SCALE: 1/4" = 1'-0"

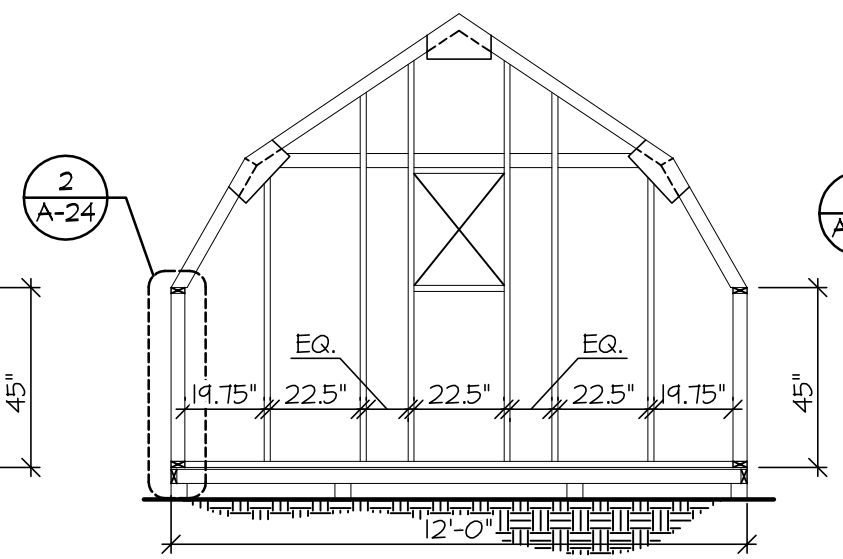

12'-0" BARN ENDWALL WITH WINDOW

2 A-7 FRAMING ELEVATION

SCALE: 1/4" = 1'-0"

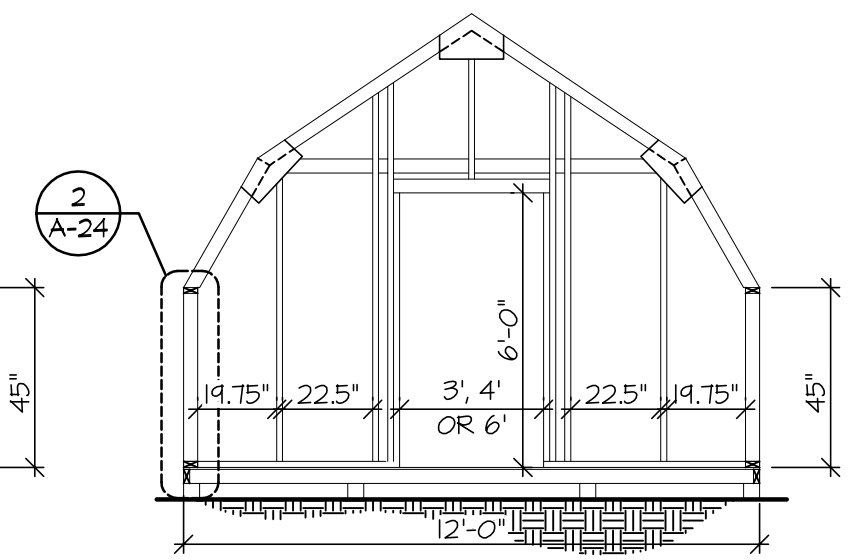

12'-0" BARN ENDWALL WITH DOOR

1 A-7 FRAMING ELEVATION

SCALE: 1/4" = 1'-0"

AREA FOR APPROVAL STAMPS

REV	BY	DATE	DESCRIPTION

THESE PLANS WERE DESIGNED IN ACCORDANCE WITH THE 2007 FLORIDA BUILDING CODE FOR A THREE SECOND GUST OF 140 MPH.

FRED S. CARDWELL, P.E., P.L.S.

ALABAMA# 14469
GEORGIA# 14241

FLORIDA# 15607
INDIANA# 20338
LOUISIANA# 20548
MISSISSIPPI# 8925
N. CAROLINA# 11108
TEXAS# 54100

1000 SOUTH BELCHER ROAD
BLDG-A / UNIT #11 LARGO,
FLORIDA 33771
VOICE: 727-524-1905
FAX: 727-524-1299

SOUTHERN STORAGE SOLUTIONS
PORTABLE STORAGE SHEDS
2504 BETTON WOODS DR.
TALLAHASSEE, FLORIDA 32312-3442
(850) 536-5843

BARN FRAMING ELEVATIONS

THIS DRAWING IS NOT VALID UNLESS SIGNED IN PURPLE INK.

DATE:	1/10/09
DRAWN BY:	KMS
CHECKED BY:	FSC
SCALE:	AS NOTED
W.O. NO:	418-010

SHEET

A-7

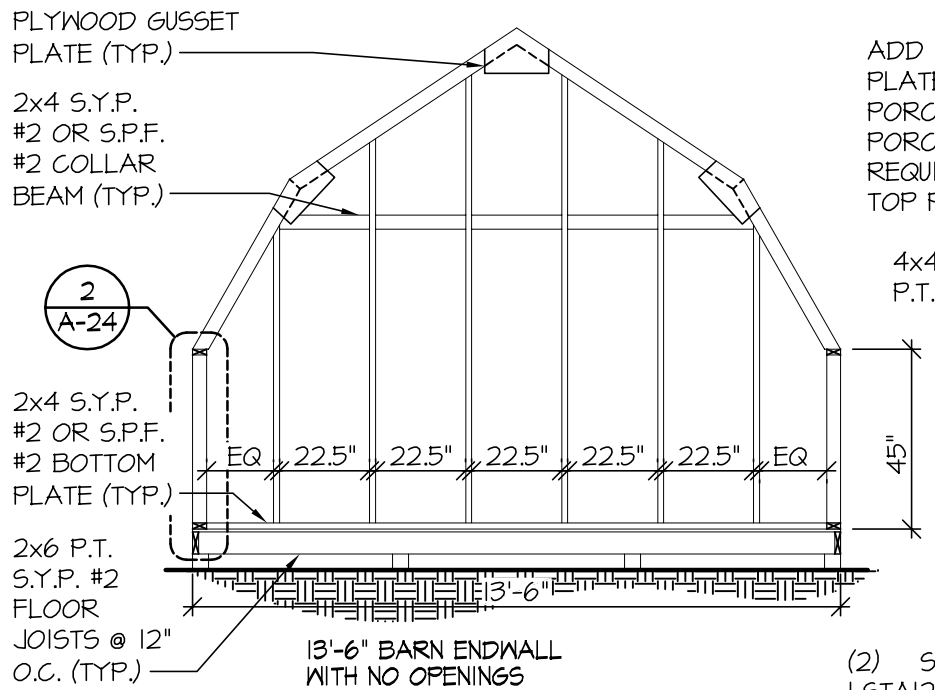

13'-6" BARN ENDWALL WITH NO OPENINGS

4 A-8 FRAMING ELEVATION

SCALE: 1/4" = 1'-0"

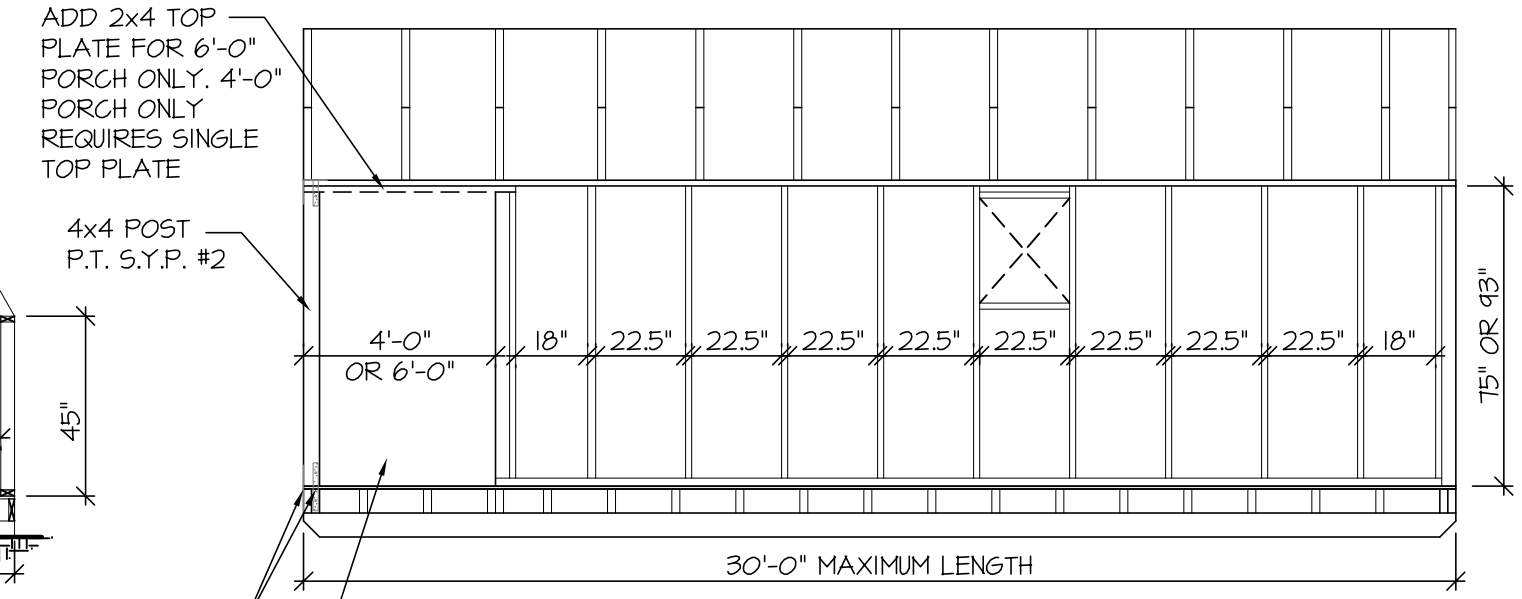

13'-6" BARN SIDEWALL WINDOW OPENING W/ OPTIONAL PORCH

3 A-8 FRAMING ELEVATION

SCALE: 1/4" = 1'-0"

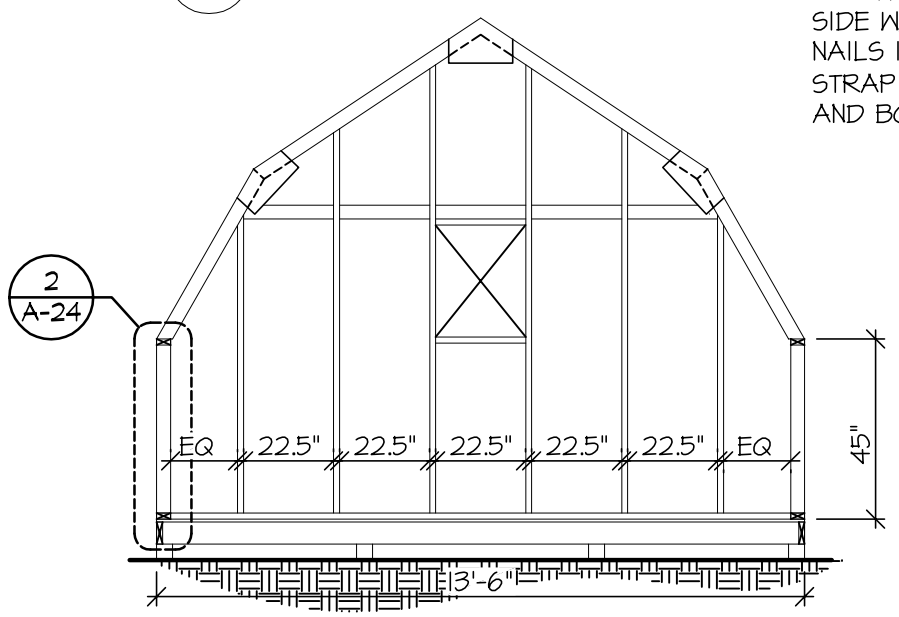

13'-6" BARN ENDWALL WITH WINDOW

2 A-8 FRAMING ELEVATION

SCALE: 1/4" = 1'-0"

NOTE:

1. STUD SPACING NOT TO EXCEED 24"

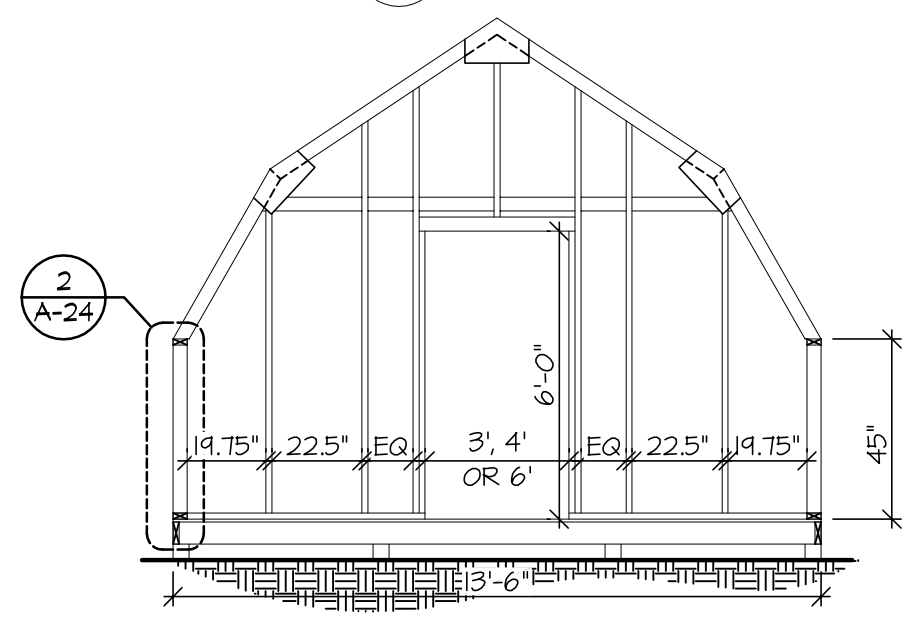

13'-6" BARN ENDWALL WITH DOOR

1 A-8 FRAMING ELEVATION

SCALE: 1/4" = 1'-0"

AREA FOR APPROVAL STAMPS

REV	BY	DATE	DESCRIPTION

THESE PLANS WERE DESIGNED IN ACCORDANCE WITH THE 2007 FLORIDA BUILDING CODE FOR A THREE SECOND GUST OF 140 MPH.

FRED S. CARDWELL, P.E., P.L.S.

ALABAMA# 14469
GEORGIA# 14241

FLORIDA# 15607
INDIANA# 20338
LOUISIANA# 20548
MISSISSIPPI# 8925
N. CAROLINA# 11108
TEXAS# 54100

1000 SOUTH BELCHER ROAD
BLDG-A / UNIT #11 LARGO,
FLORIDA 33771
VOICE: 727-524-1905
FAX: 727-524-1299

SOUTHERN STORAGE SOLUTIONS
PORTABLE STORAGE SHEDS
2504 BETTON WOODS DR.
TALLAHASSEE, FLORIDA 32312-3442
(850) 536-5843

BARN FRAMING ELEVATIONS

THIS DRAWING IS NOT VALID UNLESS SIGNED IN PURPLE INK.

DATE:	1/10/09
DRAWN BY:	KMS
CHECKED BY:	FSC
SCALE:	AS NOTED
W.O. NO:	418-010

SHEET

A-8

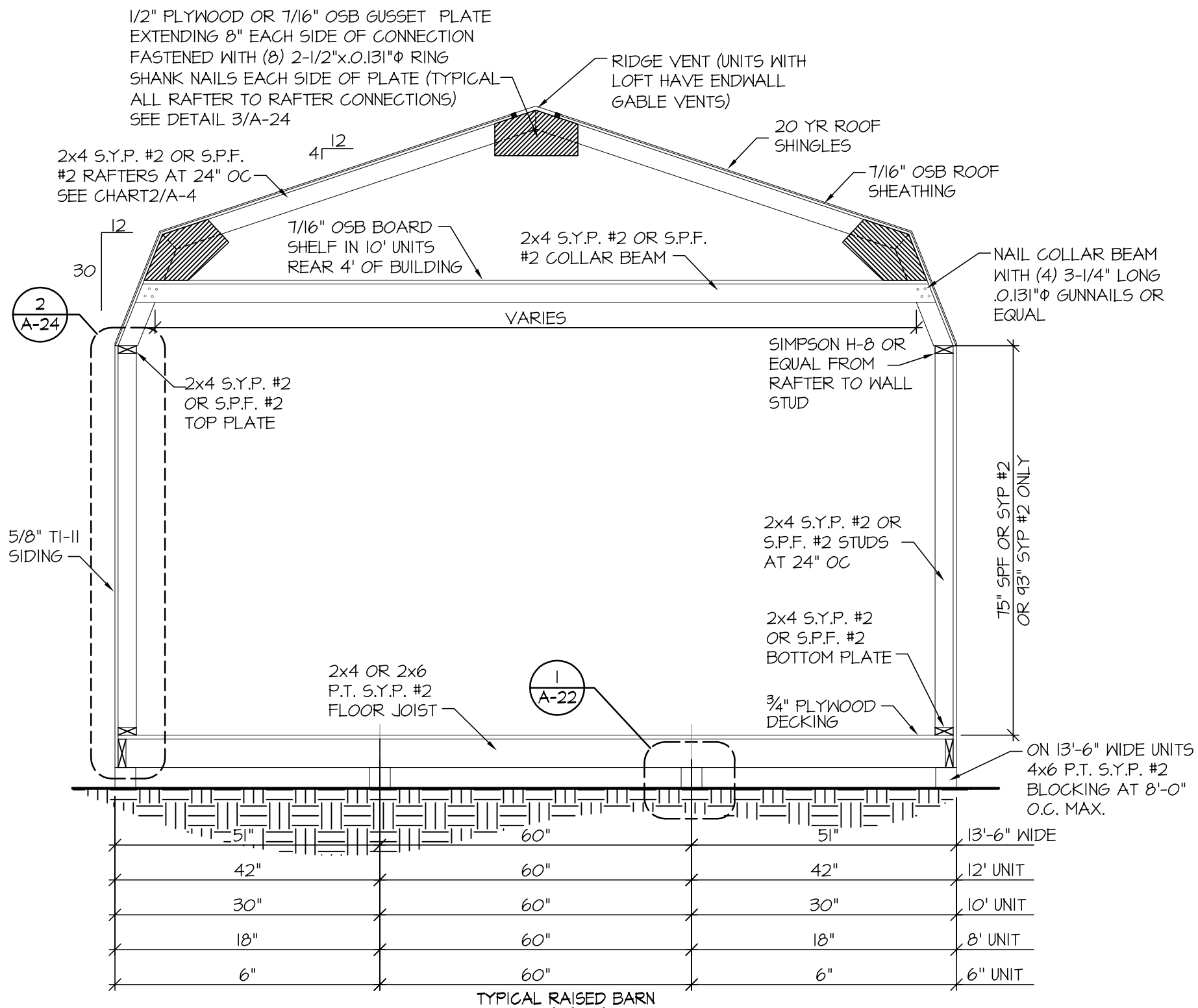

1 A-9 TYPICAL RAISED BARN CROSS SECTION

SCALE: 1/2" = 1'-0"

AREA FOR APPROVAL STAMPS

REV	BY	DATE	DESCRIPTION

THESE PLANS WERE DESIGNED IN ACCORDANCE WITH THE 2007 FLORIDA BUILDING CODE FOR A THREE SECOND GUST OF 140 MPH.

FRED S. CARDWELL, P.E., P.L.S.

ALABAMA# 14469
GEORGIA# 14241

FLORIDA# 15607
INDIANA# 20338
LOUISIANA# 20548
MISSISSIPPI# 8925
N. CAROLINA# 11108
TEXAS# 54100

1000 SOUTH BELCHER ROAD
BLDG-A / UNIT #11 LARGO,
FLORIDA 33771
VOICE: 727-524-1905
FAX: 727-524-1299

SOUTHERN STORAGE SOLUTIONS
PORTABLE STORAGE SHEDS
2504 BETTON WOODS DR.
TALLAHASSEE, FLORIDA 32312-3442
(850) 536-5843

RAISED BARN CROSS SECTION

THIS DRAWING IS NOT VALID UNLESS SIGNED IN PURPLE INK.

DATE:	1/10/09
DRAWN BY:	KMS
CHECKED BY:	FSC
SCALE:	AS NOTED
W.O. NO:	418-010

SHEET
A-9
11 OF 26

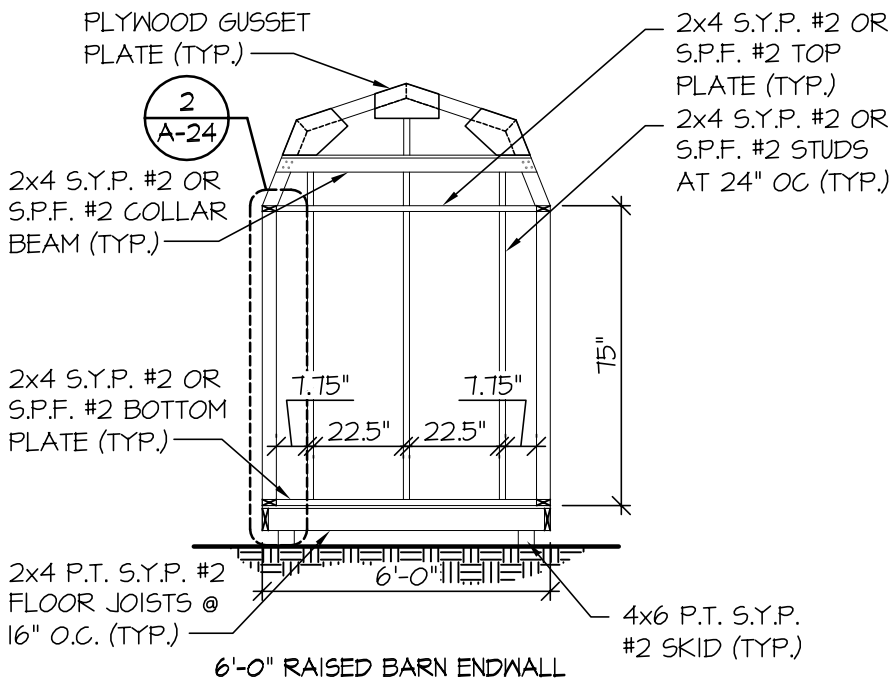

6'-0" RAISED BARN ENDWALL WITH NO OPENINGS

6 A-10 FRAMING ELEVATION

SCALE: 1/4" = 1'-0"

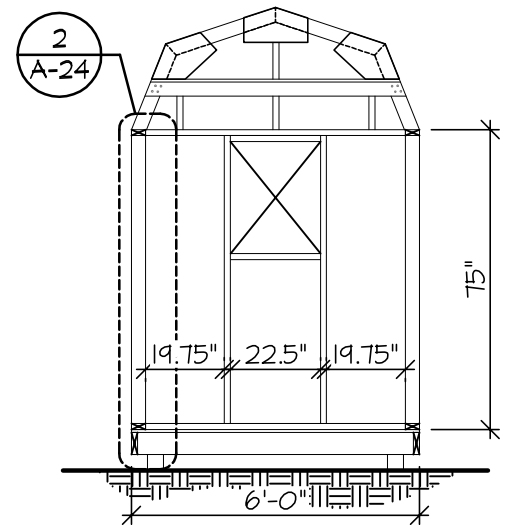

6'-0" RAISED BARN ENDWALL WITH WINDOW

5 A-10 FRAMING ELEVATION

SCALE: 1/4" = 1'-0"

NOTE:
THIS MODEL AND BUILDING WIDTH MAY NOT BE BUILT WITH A DOOR IN THE ENDWALL

6'-0" RAISED BARN ENDWALL WITH DOOR

4 A-10 FRAMING ELEVATION

SCALE: 1/4" = 1'-0"

NOTE:

1. STUD SPACING NOT TO EXCEED 24"

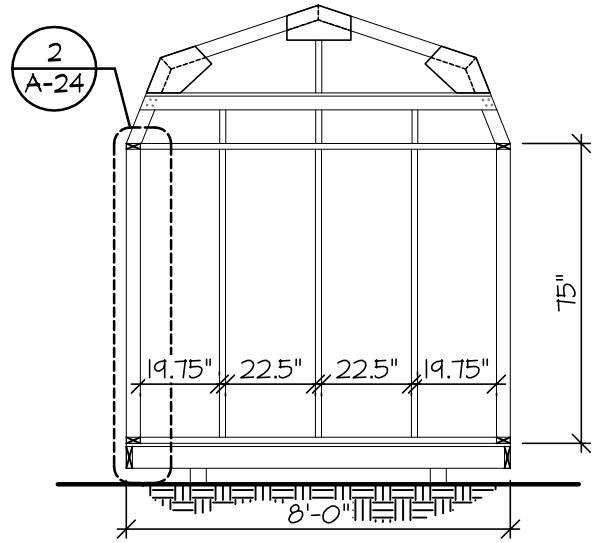

8'-0" RAISED BARN ENDWALL WITH NO OPENINGS

3 A-10 FRAMING ELEVATION

SCALE: 1/4" = 1'-0"

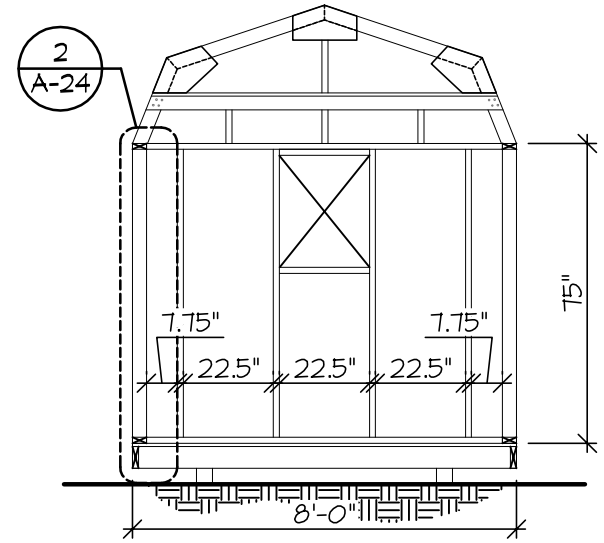

8'-0" RAISED BARN ENDWALL WITH WINDOW

2 A-10 FRAMING ELEVATION

SCALE: 1/4" = 1'-0"

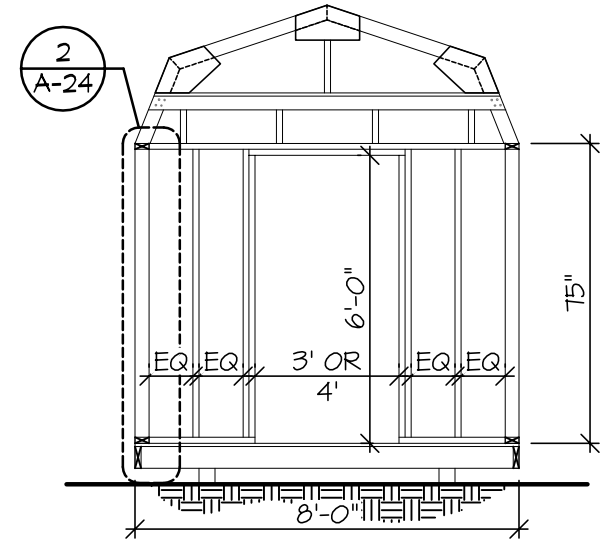

8'-0" RAISED BARN ENDWALL WITH DOOR

1 A-10 FRAMING ELEVATION

SCALE: 1/4" = 1'-0"

AREA FOR APPROVAL STAMPS

REV	BY	DATE	DESCRIPTION

THESE PLANS WERE DESIGNED IN ACCORDANCE WITH THE 2007 FLORIDA BUILDING CODE FOR A THREE SECOND GUST OF 140 MPH.

FRED S. CARDWELL, P.E., P.L.S.

ALABAMA# 14469
GEORGIA# 14241

FLORIDA# 15607
INDIANA# 20338
LOUISIANA# 20548
MISSISSIPPI# 8925
N. CAROLINA# 11108
TEXAS# 54100

1000 SOUTH BELCHER ROAD
BLDG-A / UNIT #11 LARGO,
FLORIDA 33771
VOICE: 727-524-1905
FAX: 727-524-1299

SOUTHERN STORAGE SOLUTIONS
PORTABLE STORAGE SHEDS
2504 BETTON WOODS DR.
TALLAHASSEE, FLORIDA 32312-3442
(850) 536-5843

RAISED BARN FRAMING ELEVATIONS

THIS DRAWING IS NOT VALID UNLESS SIGNED IN PURPLE INK.

DATE:	1/10/09
DRAWN BY:	KMS
CHECKED BY:	FSC
SCALE:	AS NOTED
W.O. NO:	418-010

SHEET

A-10

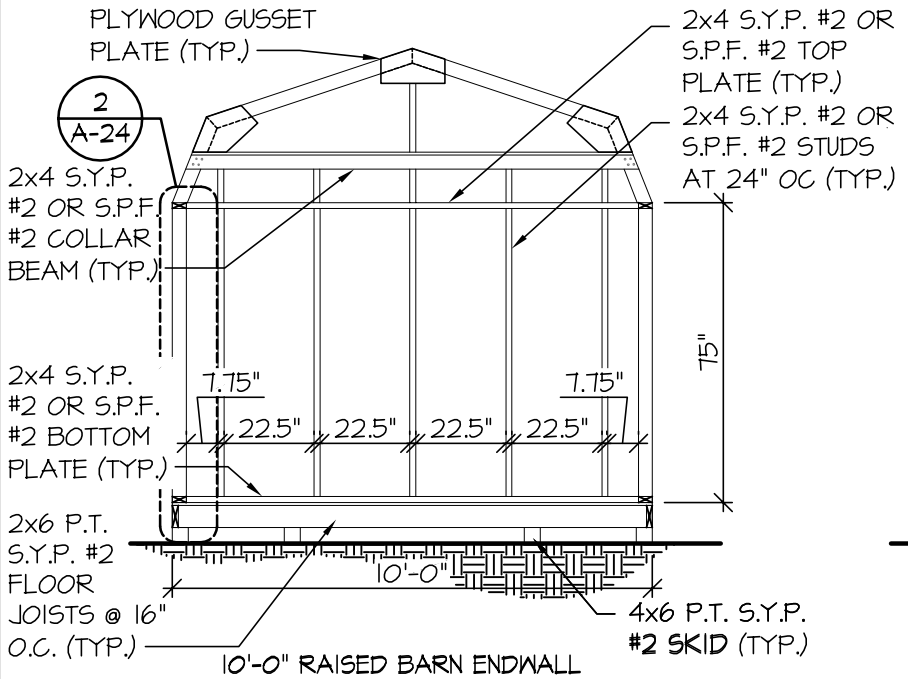

10'-0" RAISED BARN ENDWALL WITH NO OPENINGS

6 A-11 FRAMING ELEVATION

SCALE: 1/4" = 1'-0"

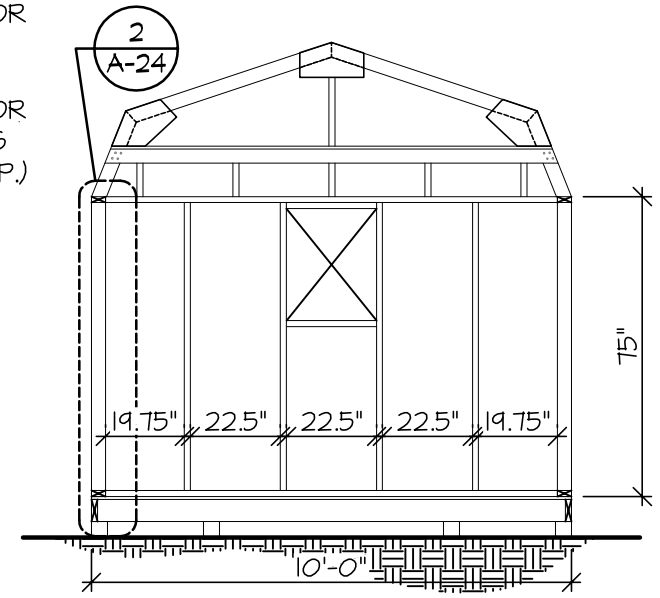

10'-0" RAISED BARN ENDWALL WITH WINDOW

5 A-11 FRAMING ELEVATION

SCALE: 1/4" = 1'-0"

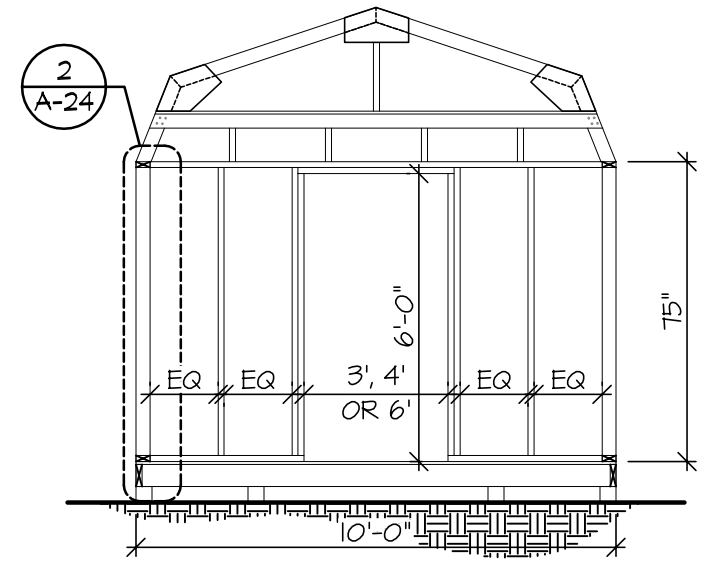

10'-0" RAISED BARN ENDWALL WITH DOOR

4 A-11 FRAMING ELEVATION

SCALE: 1/4" = 1'-0"

NOTE:

1. STUD SPACING NOT TO EXCEED 24"

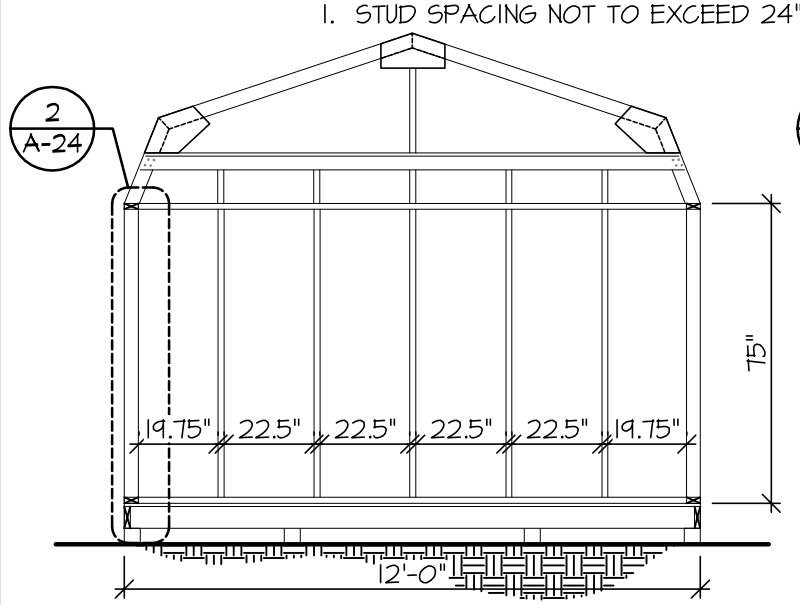

12'-0" RAISED BARN ENDWALL WITH NO OPENINGS

3 A-11 FRAMING ELEVATION

SCALE: 1/4" = 1'-0"

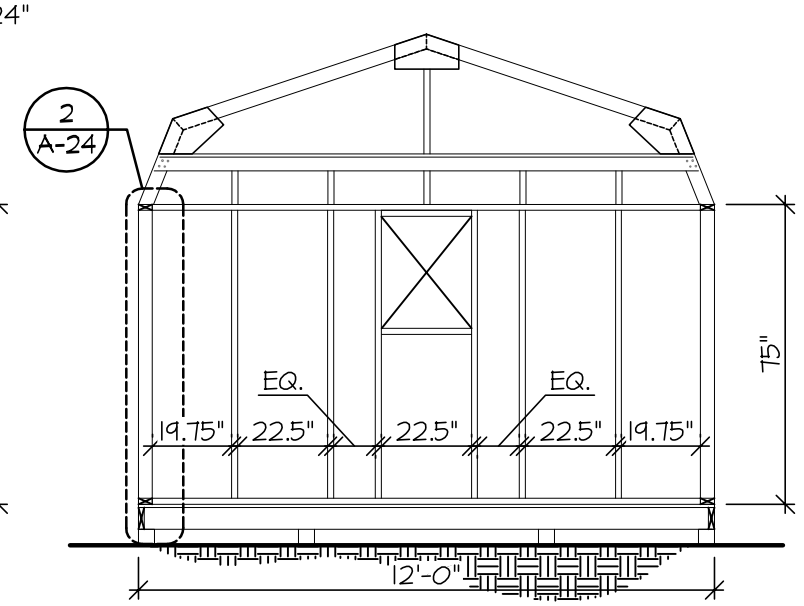

12'-0" RAISED BARN ENDWALL WITH WINDOW

2 A-11 FRAMING ELEVATION

SCALE: 1/4" = 1'-0"

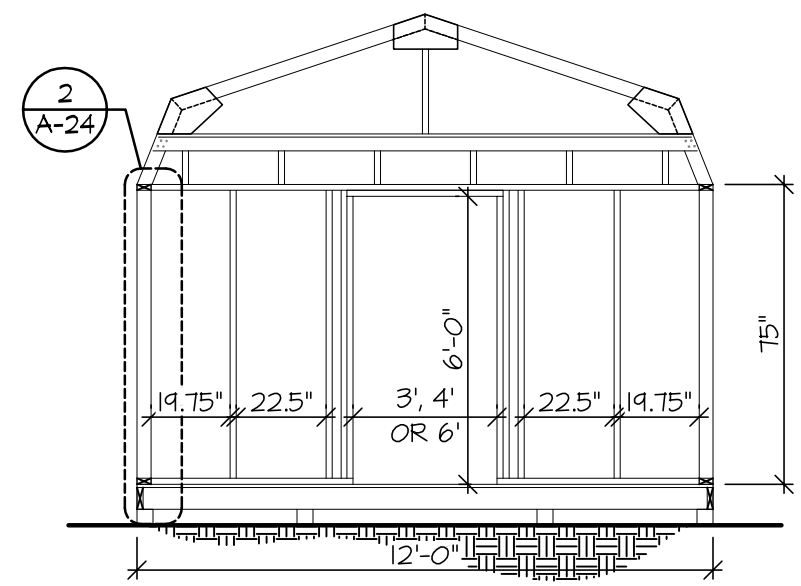

12'-0" RAISED BARN ENDWALL WITH DOOR

1 A-11 FRAMING ELEVATION

SCALE: 1/4" = 1'-0"

AREA FOR APPROVAL STAMPS

REV	BY	DATE	DESCRIPTION

THESE PLANS WERE DESIGNED IN ACCORDANCE WITH THE 2007 FLORIDA BUILDING CODE FOR A THREE SECOND GUST OF 140 MPH.

FRED S. CARDWELL, P.E., P.L.S.

ALABAMA# 14469
GEORGIA# 14241

FLORIDA# 15607
INDIANA# 20338
LOUISIANA# 20548
MISSISSIPPI# 8925
N. CAROLINA# 11108
TEXAS# 54100

1000 SOUTH BELCHER ROAD
BLDG-A / UNIT #11 LARGO,
FLORIDA 33771
VOICE: 727-524-1905
FAX: 727-524-1299

SOUTHERN STORAGE SOLUTIONS
PORTABLE STORAGE SHEDS
2504 BETTON WOODS DR.
TALLAHASSEE, FLORIDA 32312-3442
(850) 536-5843

RAISED BARN FRAMING ELEVATIONS

THIS DRAWING IS NOT VALID UNLESS SIGNED IN PURPLE INK.

DATE:	1/10/09
DRAWN BY:	KMS
CHECKED BY:	FSC
SCALE:	AS NOTED
W.O. NO:	418-010

SHEET

A-11

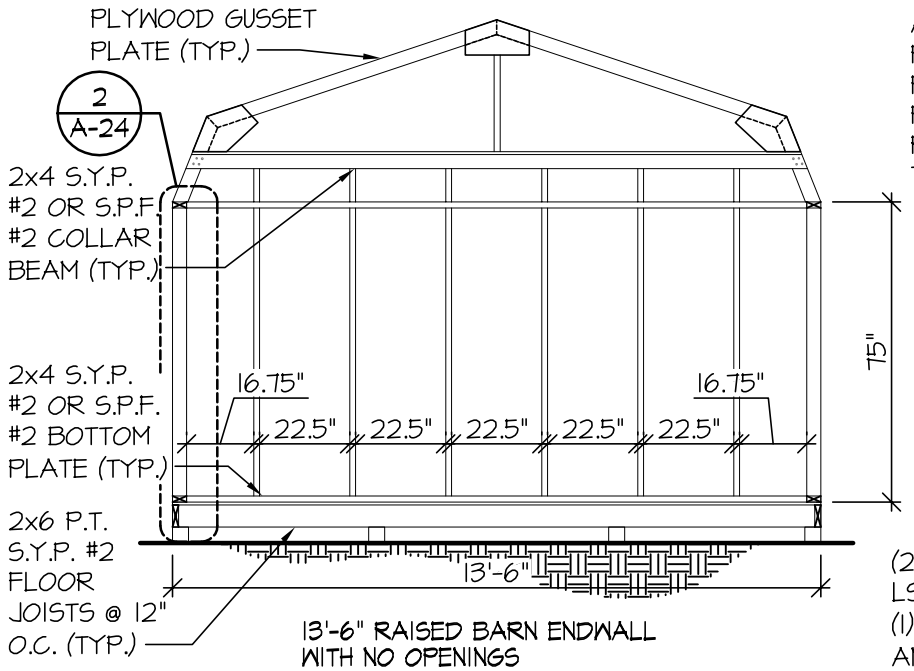

13'-6" RAISED BARN ENDWALL WITH NO OPENINGS

4 A-12 FRAMING ELEVATION

SCALE: 1/4" = 1'-0"

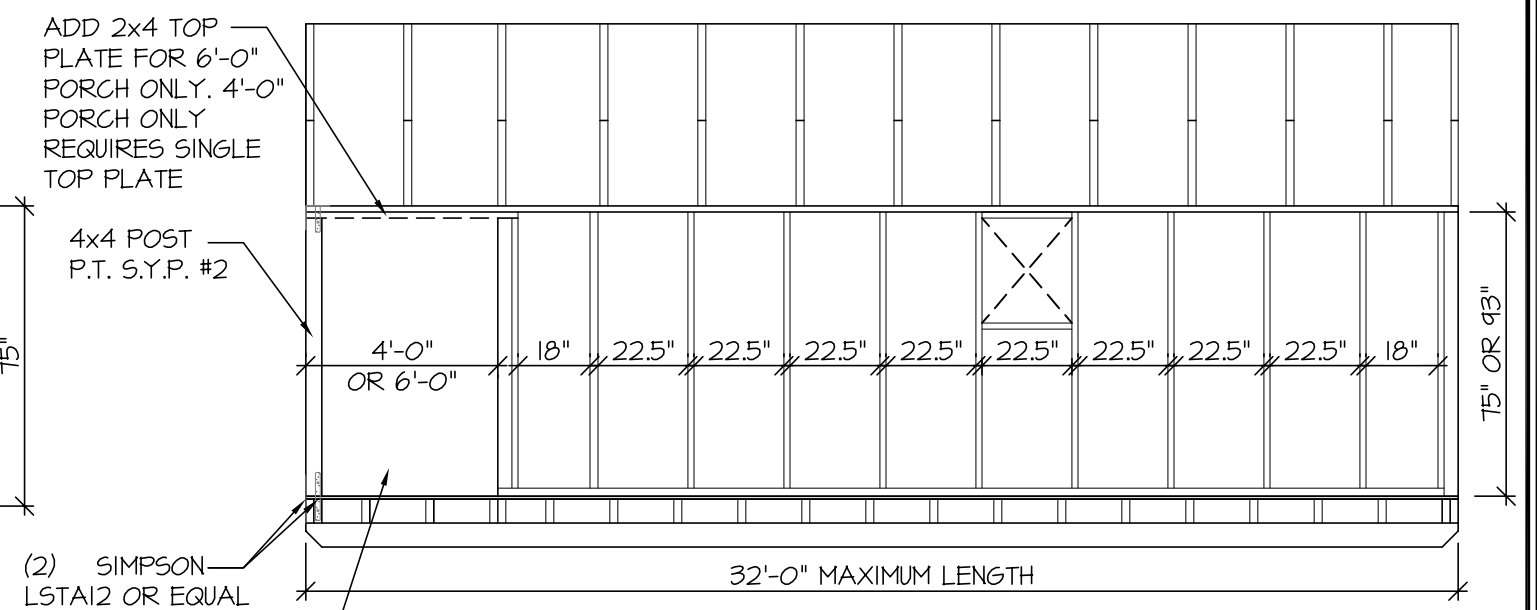

13'-6" RAISED BARN SIDEWALL WINDOW OPENING W/ OPTIONAL PORCH

3 A-12 FRAMING ELEVATION

SCALE: 1/4" = 1'-0"

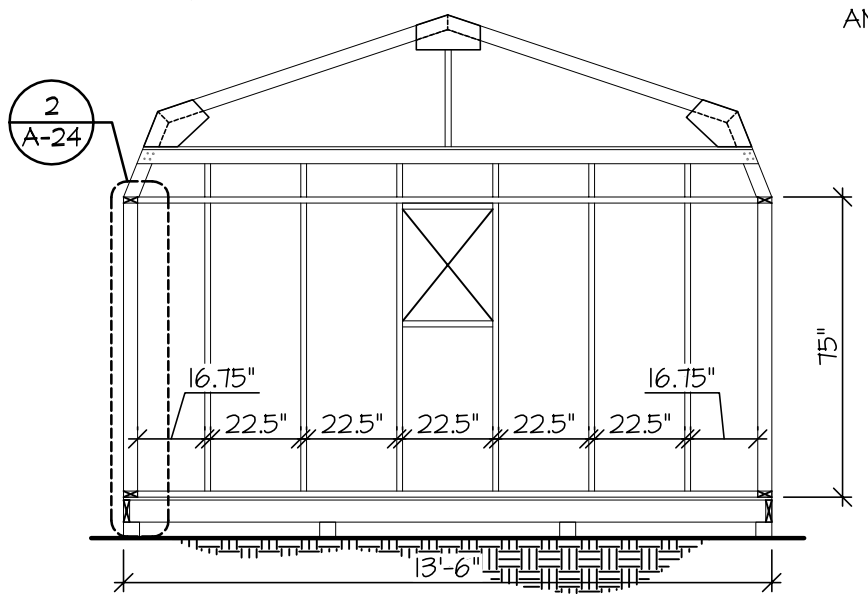

13'-6" RAISED BARN ENDWALL WITH WINDOW

2 A-12 FRAMING ELEVATION

SCALE: 1/4" = 1'-0"

NOTE:

1. STUD SPACING NOT TO EXCEED 24"

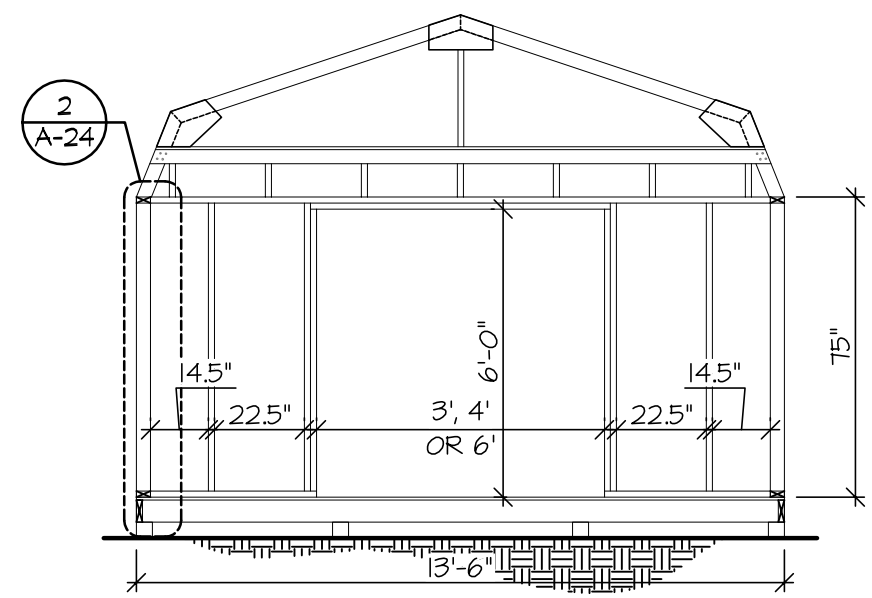

13'-6" RAISED BARN ENDWALL WITH DOOR

1 A-12 FRAMING ELEVATION

SCALE: 1/4" = 1'-0"

AREA FOR APPROVAL STAMPS

REV	BY	DATE	DESCRIPTION

THESE PLANS WERE DESIGNED IN ACCORDANCE WITH THE 2007 FLORIDA BUILDING CODE FOR A THREE SECOND GUST OF 140 MPH.

FRED S. CARDWELL, P.E., P.L.S.

ALABAMA# 14469
GEORGIA# 14241
FLORIDA# 15607
INDIANA# 20338
LOUISIANA# 20548
MISSISSIPPI# 8925
N. CAROLINA# 11108
TEXAS# 54100

1000 SOUTH BELCHER ROAD
BLDG-A / UNIT #11 LARGO,
FLORIDA 33771
VOICE: 727-524-1905
FAX: 727-524-1299

SOUTHERN STORAGE SOLUTIONS
PORTABLE STORAGE SHEDS
2504 BETTON WOODS DR.
TALLAHASSEE, FLORIDA 32312-3442
(850) 536-5843

RAISED BARN FRAMING ELEVATIONS

THIS DRAWING IS NOT VALID UNLESS SIGNED IN PURPLE INK.

DATE:	1/10/09
DRAWN BY:	KMS
CHECKED BY:	FSC
SCALE:	AS NOTED
W.O. NO:	418-010

SHEET

A-12

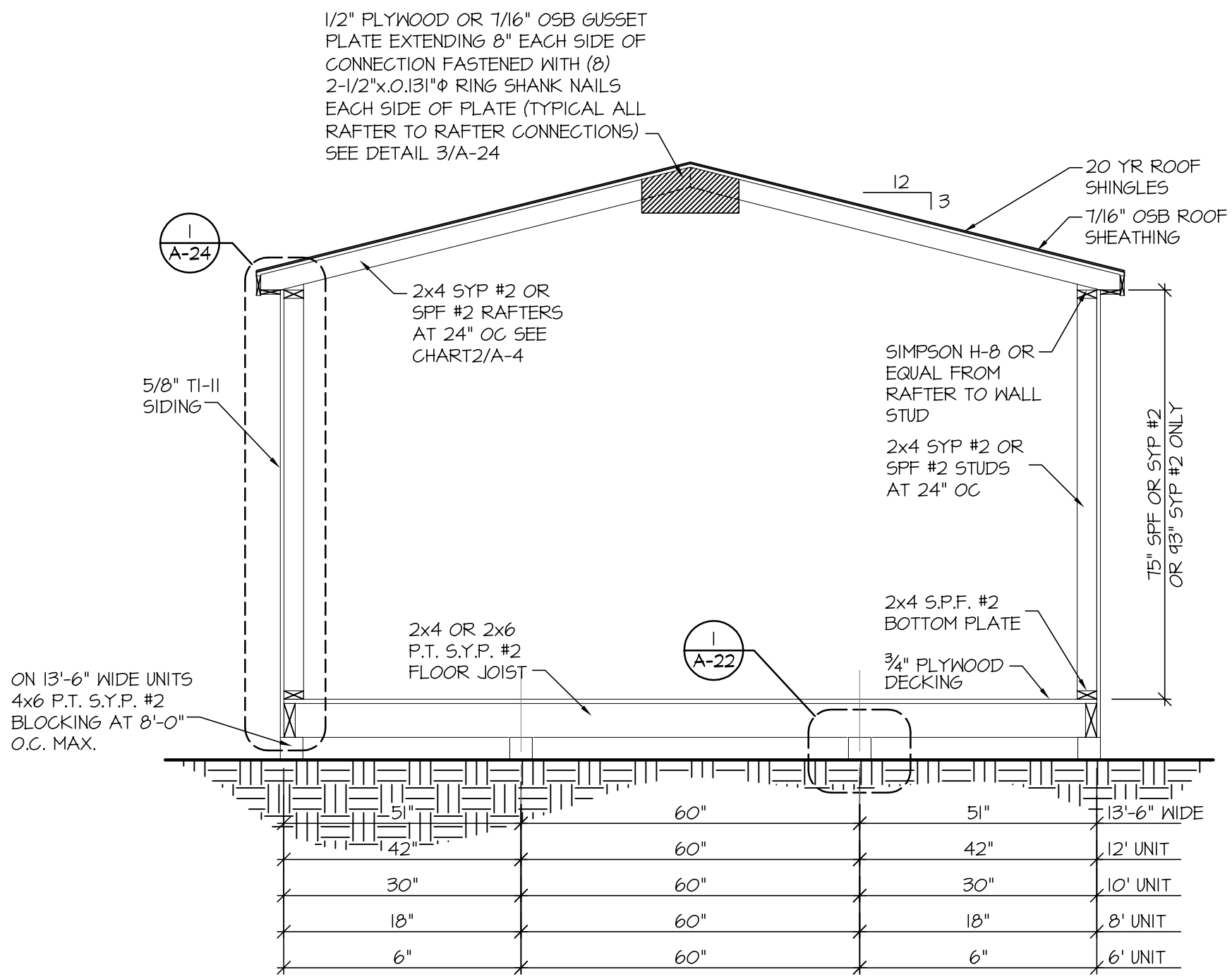

1
A-13

TYPICAL CABIN
CROSS SECTION
SCALE: 1/2" = 1'-0"

AREA FOR APPROVAL STAMPS

REV	BY	DATE	DESCRIPTION

THESE PLANS WERE DESIGNED IN ACCORDANCE WITH THE 2007 FLORIDA BUILDING CODE FOR A THREE SECOND GUST OF 140 MPH.

FRED S. CARDWELL, P.E., P.L.S.

ALABAMA# 14469
GEORGIA# 14241

FLORIDA# 15607
INDIANA# 20338
LOUISIANA# 20548
MISSISSIPPI# 8925
N. CAROLINA# 11108
TEXAS# 54100

1000 SOUTH BELCHER ROAD
BLDG-A / UNIT #11 LARGO,
FLORIDA 33771
VOICE: 727-524-1905
FAX: 727-524-1299

SOUTHERN STORAGE SOLUTIONS
PORTABLE STORAGE SHEDS
2504 BETTON WOODS DR.
TALLAHASSEE, FLORIDA 32312-3442
(850) 536-5843

CABIN CROSS SECTION

THIS DRAWING IS NOT VALID UNLESS SIGNED IN PURPLE INK.

DATE:	1/10/09
DRAWN BY:	KMS
CHECKED BY:	FSC
SCALE:	AS NOTED
W.O. NO:	418-010

SHEET
A-13
15 OF 26

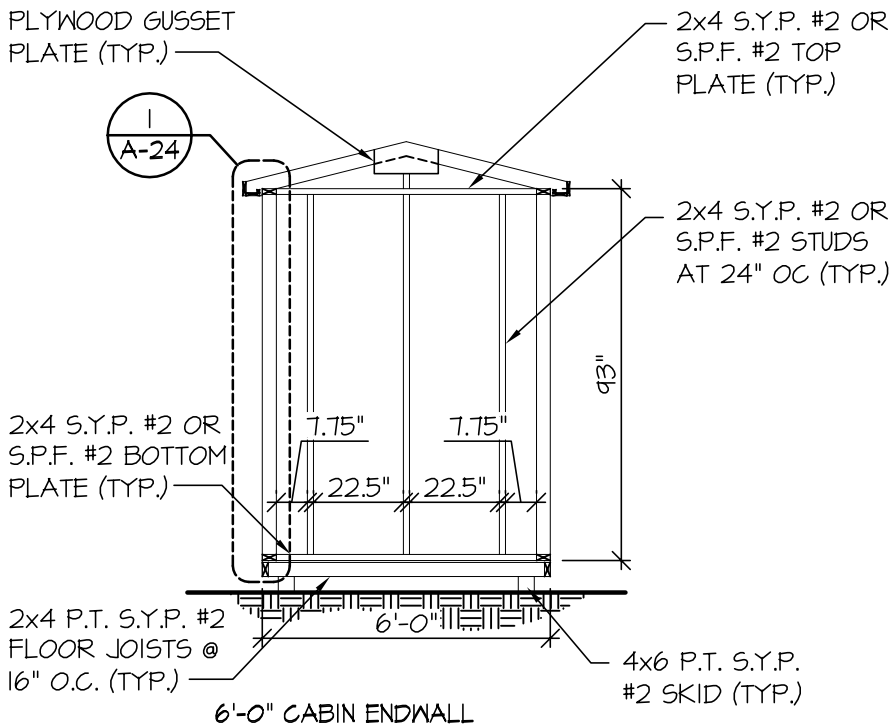

6'-0" CABIN ENDWALL WITH NO OPENINGS

6 / A-14 FRAMING ELEVATION

SCALE: 1/4" = 1'-0"

NOTE:
THIS MODEL AND BUILDING WIDTH MAY NOT BE BUILT WITH A WINDOW IN THE ENDWALL

6'-0" CABIN ENDWALL WITH WINDOW

5 / A-14 FRAMING ELEVATION

SCALE: 1/4" = 1'-0"

NOTE:
THIS MODEL AND BUILDING WIDTH MAY NOT BE BUILT WITH A DOOR IN THE ENDWALL

6'-0" CABIN ENDWALL WITH DOOR

4 / A-14 FRAMING ELEVATION

SCALE: 1/4" = 1'-0"

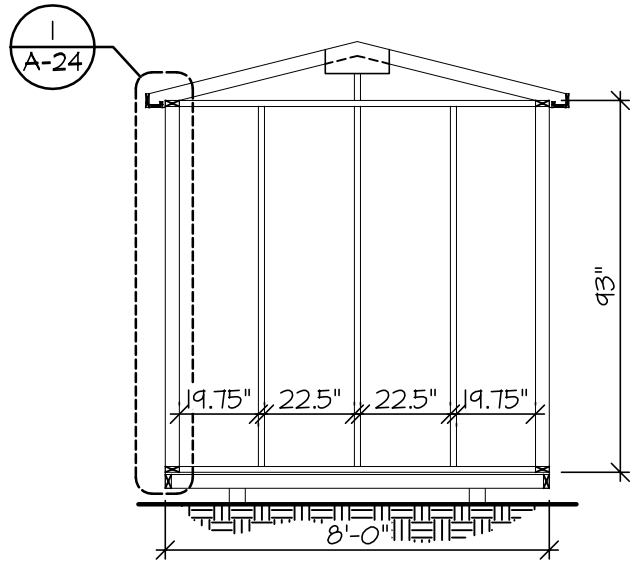

8'-0" CABIN ENDWALL WITH NO OPENINGS

3 / A-14 FRAMING ELEVATION

SCALE: 1/4" = 1'-0"

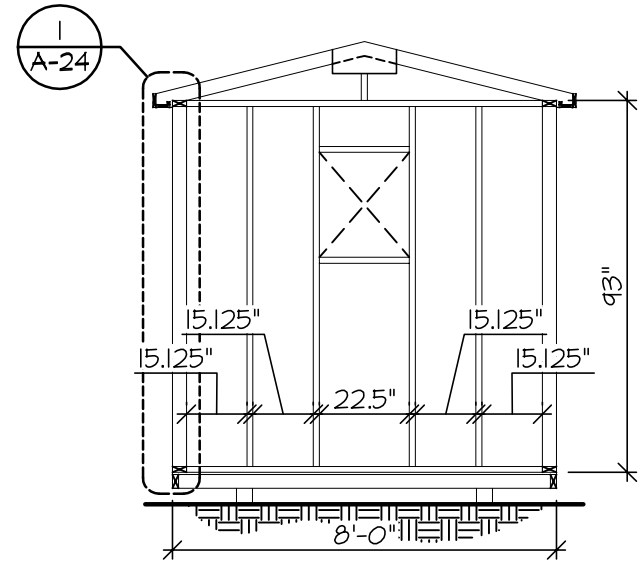

8'-0" CABIN ENDWALL WITH WINDOW

A-10 / A-14 FRAMING ELEVATION

SCALE: 1/4" = 1'-0"

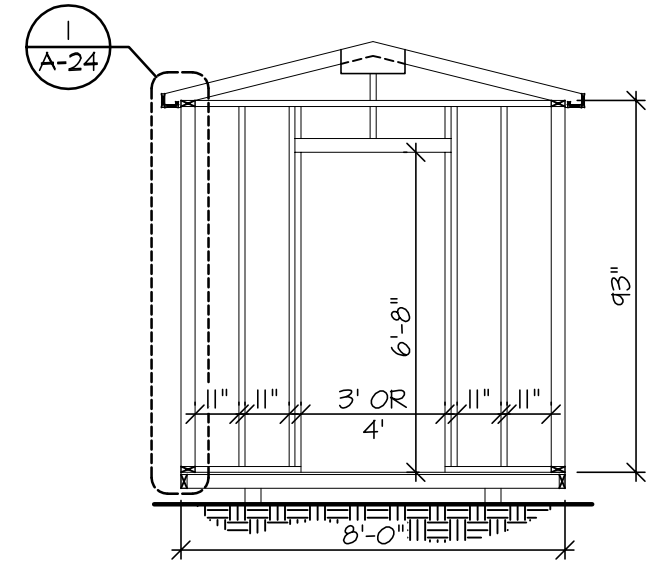

8'-0" CABIN ENDWALL WITH DOOR

1 / A-14 FRAMING ELEVATION

SCALE: 1/4" = 1'-0"

AREA FOR APPROVAL STAMPS

REV	BY	DATE	DESCRIPTION

THESE PLANS WERE DESIGNED IN ACCORDANCE WITH THE 2007 FLORIDA BUILDING CODE FOR A THREE SECOND GUST OF 140 MPH.

FRED S. CARDWELL, P.E., P.L.S.

ALABAMA# 14469
GEORGIA# 14241

FSC

FLORIDA# 15607
INDIANA# 20338
LOUISIANA# 20548
MISSISSIPPI# 8925
N. CAROLINA# 11108
TEXAS# 54100

1000 SOUTH BELCHER ROAD
BLDG-A / UNIT #11 LARGO,
FLORIDA 33771
VOICE: 727-524-1905
FAX: 727-524-1299

SOUTHERN STORAGE SOLUTIONS
PORTABLE STORAGE SHEDS
2504 BETTON WOODS DR.
TALLAHASSEE, FLORIDA 32312-3442
(850) 536-5843

CABIN FRAMING ELEVATIONS

THIS DRAWING IS NOT VALID UNLESS SIGNED IN PURPLE INK.

DATE:	1/10/09
DRAWN BY:	KMS
CHECKED BY:	FSC
SCALE:	AS NOTED
W.O. NO:	418-010

SHEET

A-14

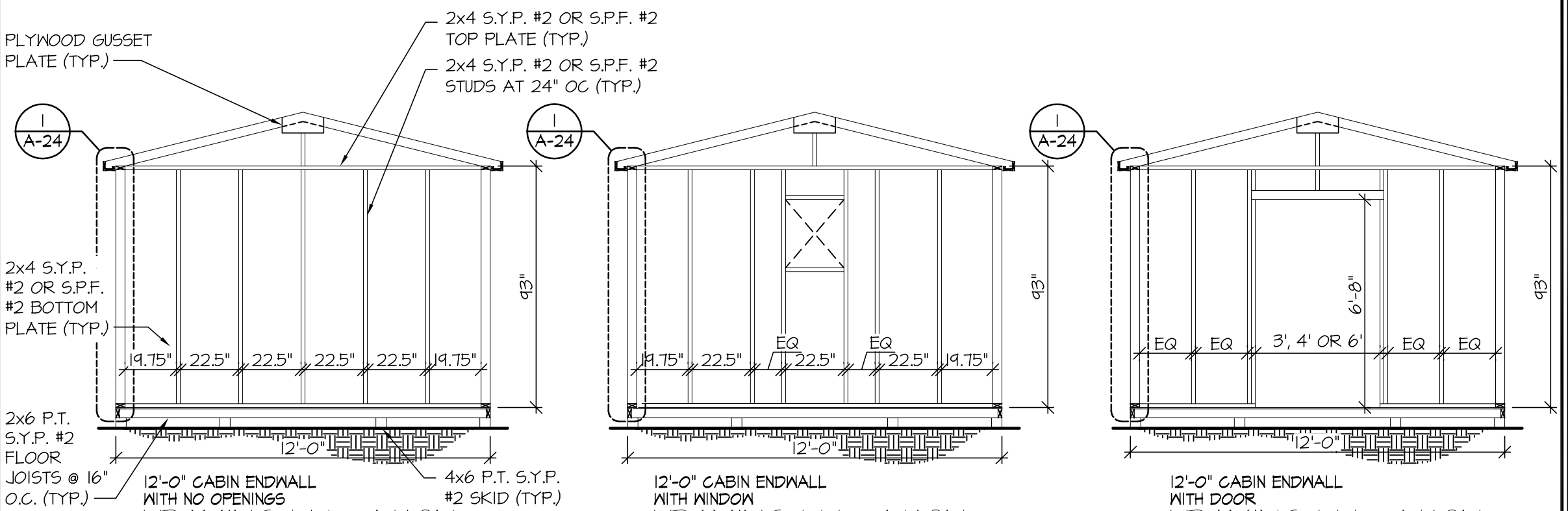

12'-0" CABIN ENDWALL WITH NO OPENINGS
6 A-15 FRAMING ELEVATION
SCALE: 1/4" = 1'-0"

12'-0" CABIN ENDWALL WITH WINDOW
5 A-15 FRAMING ELEVATION
SCALE: 1/4" = 1'-0"

12'-0" CABIN ENDWALL WITH DOOR
4 A-15 FRAMING ELEVATION
SCALE: 1/4" = 1'-0"

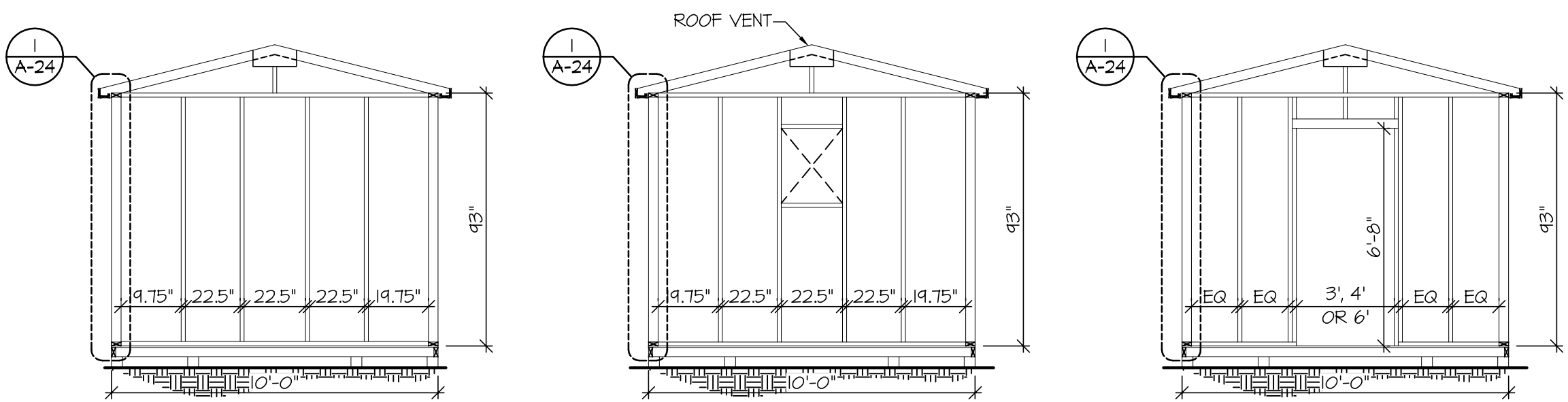

10'-0" CABIN ENDWALL WITH NO OPENINGS
3 A-15 FRAMING ELEVATION
SCALE: 1/4" = 1'-0"

10'-0" CABIN ENDWALL WITH WINDOW
2 A-15 FRAMING ELEVATION
SCALE: 1/4" = 1'-0"

10'-0" CABIN ENDWALL WITH DOOR
1 A-15 FRAMING ELEVATION
SCALE: 1/4" = 1'-0"

AREA FOR APPROVAL STAMPS

REV	BY	DATE	DESCRIPTION

THESE PLANS WERE DESIGNED IN ACCORDANCE WITH THE 2007 FLORIDA BUILDING CODE FOR A THREE SECOND GUST OF 140 MPH.

FRED S. CARDWELL, P.E., P.L.S.

ALABAMA# 14469
GEORGIA# 14241
FLORIDA# 15607
INDIANA# 20338
LOUISIANA# 20548
MISSISSIPPI# 8925
N. CAROLINA# 11108
TEXAS# 54100

1000 SOUTH BELCHER ROAD
BLDG-A / UNIT #11 LARGO,
FLORIDA 33771
VOICE: 727-524-1905
FAX: 727-524-1299

SOUTHERN STORAGE SOLUTIONS
PORTABLE STORAGE SHEDS
2504 BETTON WOODS DR.
TALLAHASSEE, FLORIDA 32312-3442
(850) 536-5843

CABIN FRAMING ELEVATIONS

THIS DRAWING IS NOT VALID UNLESS SIGNED IN PURPLE INK.

DATE:	1/10/09
DRAWN BY:	KMS
CHECKED BY:	FSC
SCALE:	AS NOTED
W.O. NO:	418-010

SHEET
A-15
17 OF 26

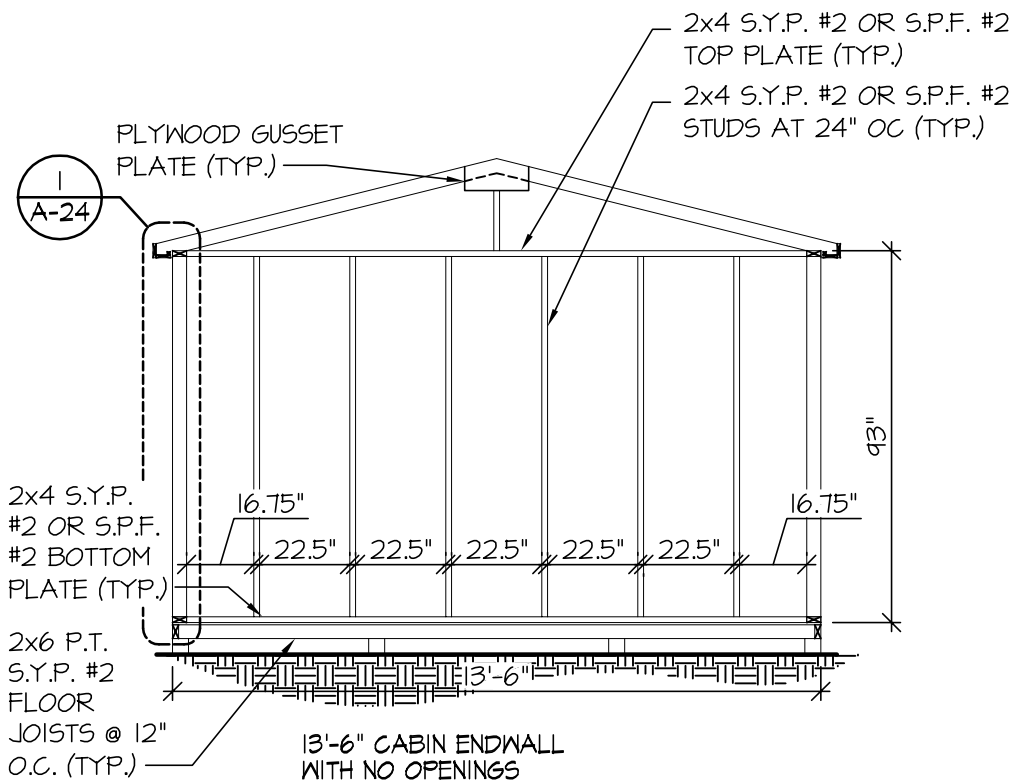

13'-6" CABIN ENDWALL
WITH NO OPENINGS

4 / A-16 FRAMING ELEVATION

SCALE: 1/4" = 1'-0"

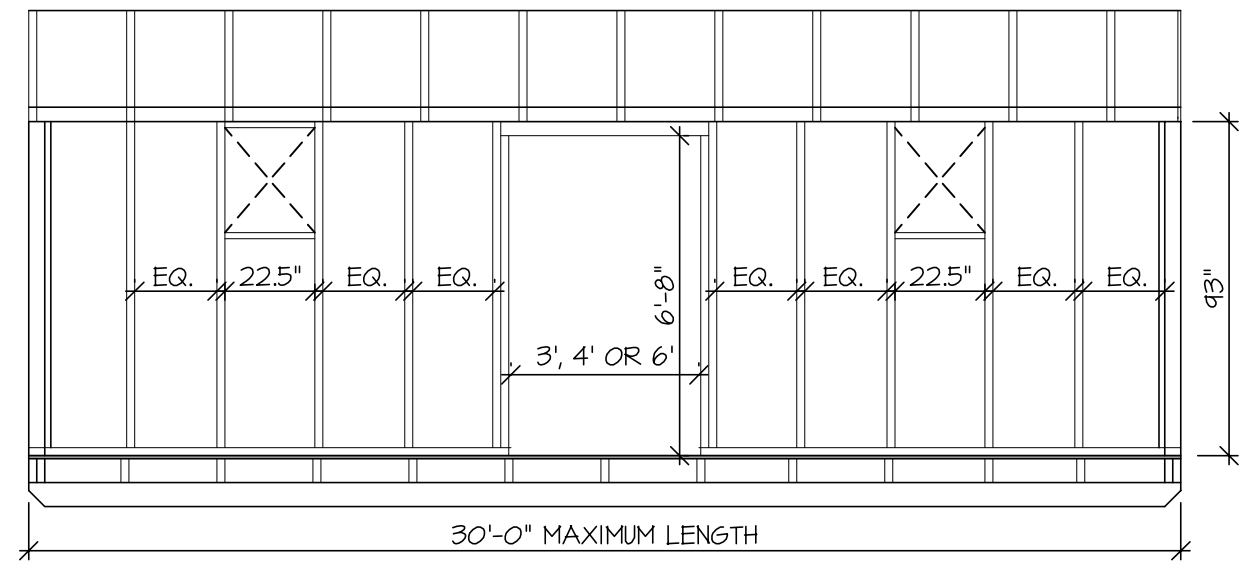

13'-6" CABIN SIDEWALL
WITH OPENINGS

3 / A-16 FRAMING ELEVATION

SCALE: 1/4" = 1'-0"

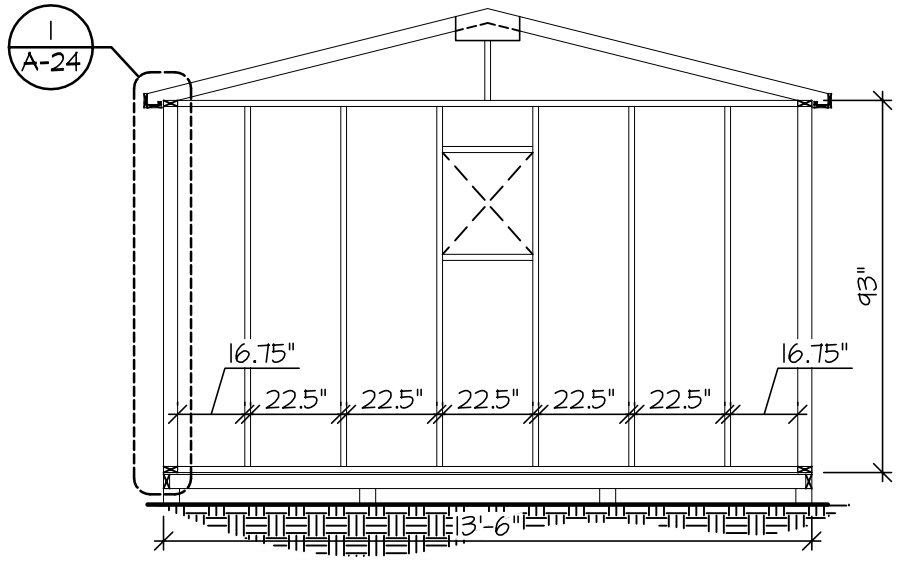

13'-6" CABIN ENDWALL
WITH WINDOW

2 / A-16 FRAMING ELEVATION

SCALE: 1/4" = 1'-0"

NOTE:

1. STUD SPACING NOT TO EXCEED 24"

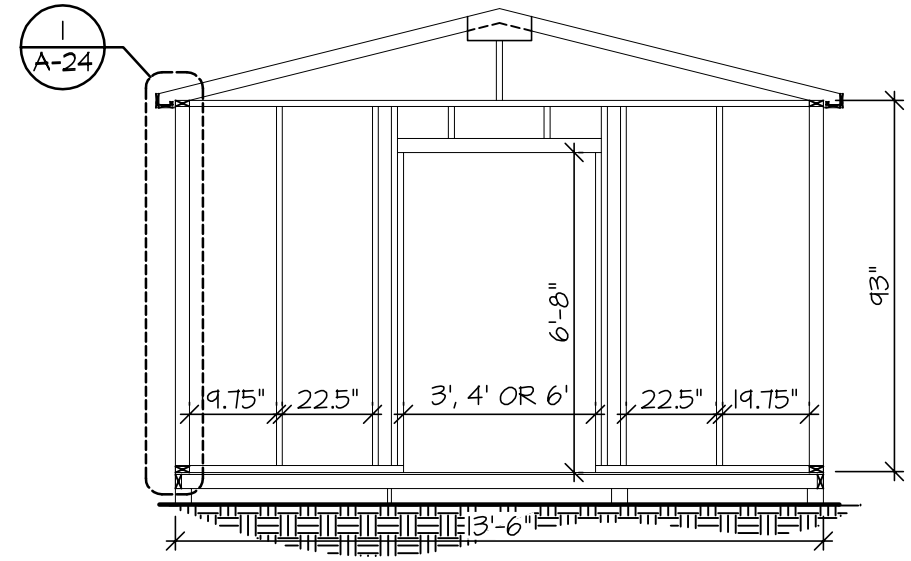

13'-6" CABIN ENDWALL
WITH DOOR

1 / A-16 FRAMING ELEVATION

SCALE: 1/4" = 1'-0"

AREA FOR APPROVAL STAMPS

REV	BY	DATE	DESCRIPTION

THESE PLANS WERE DESIGNED IN ACCORDANCE WITH THE 2007 FLORIDA BUILDING CODE FOR A THREE SECOND GUST OF 140 MPH.

FRED S. CARDWELL, P.E., P.L.S.

ALABAMA# 14469
GEORGIA# 14241

FLORIDA# 15607
INDIANA# 20338
LOUISIANA# 20548
MISSISSIPPI# 8925
N. CAROLINA# 11108
TEXAS# 54100

1000 SOUTH BELCHER ROAD
BLDG-A / UNIT #11 LARGO,
FLORIDA 33771
VOICE: 727-524-1905
FAX: 727-524-1299

SOUTHERN STORAGE SOLUTIONS
PORTABLE STORAGE SHEDS
2504 BETTON WOODS DR.
TALLAHASSEE, FLORIDA 32312-3442
(850) 536-5843

CABIN FRAMING ELEVATIONS

THIS DRAWING IS NOT VALID
UNLESS SIGNED IN PURPLE INK.

DATE:	1/10/09
DRAWN BY:	KMS
CHECKED BY:	FSC
SCALE:	AS NOTED
W.O. NO:	418-010

SHEET
A-16