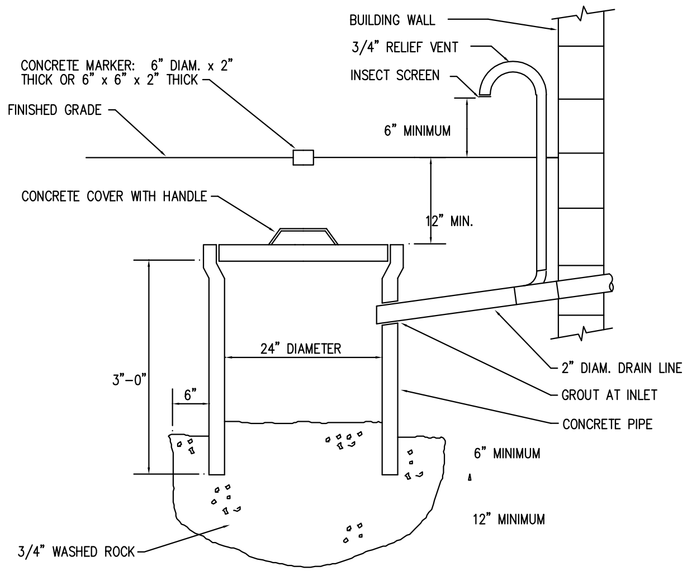

CONDENSATE DRYWELL DETAIL

NO SCALE

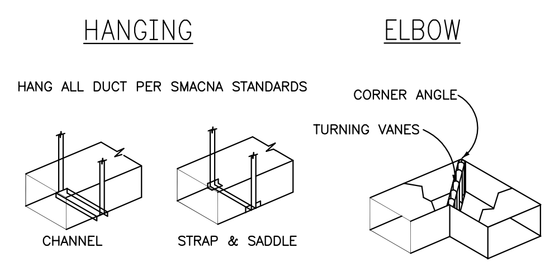

HVAC DUCT DETAILS

N.T.S.

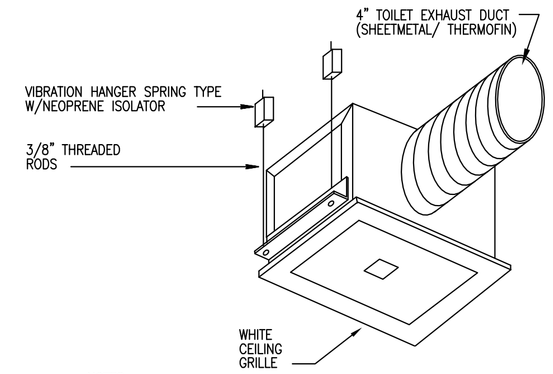

NOTES:

1.- PROVIDE BACKDRAFT DAMPER W/ BIRDSCREEN
2.- FLASH & SEAL WALL AND ROOF CAP
3.- PROVIDE INTERNAL ISOLATION AND SOUND INSULATION
4.- SUPPORT FAN FROM STRUCTURE

CABINET EXHAUST FAN DETAIL

N.T.S.

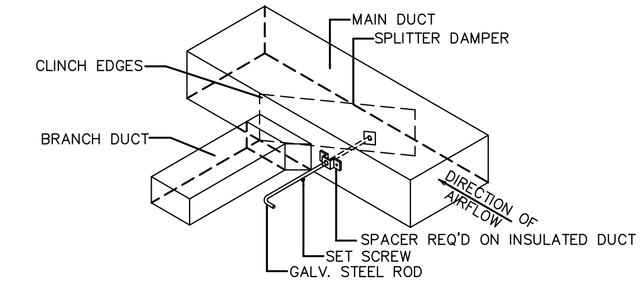

TYPICAL DUCT TAP-OFF

NOT TO SCALE

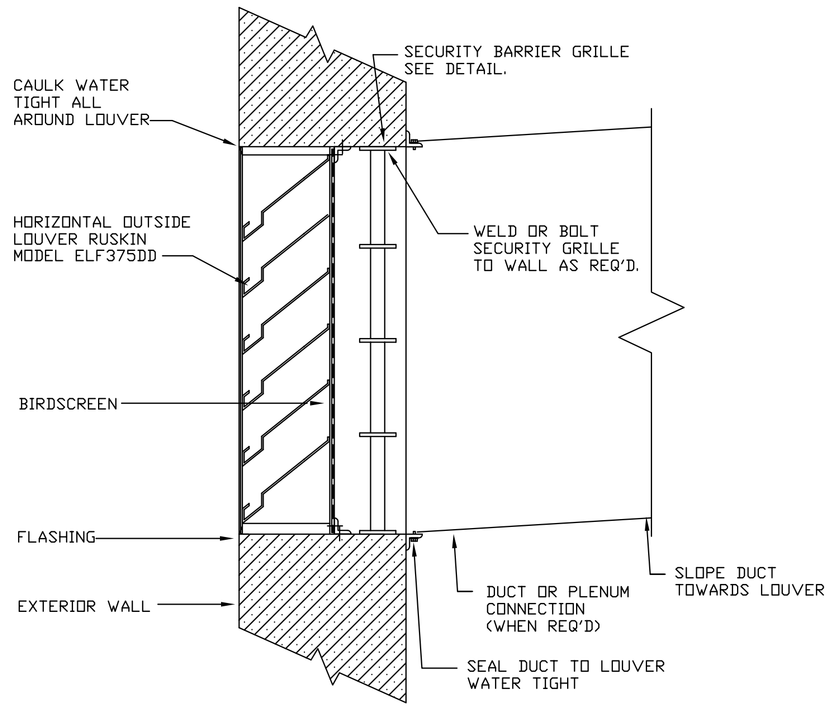

NOTE: CHANNEL TYPE SHOWN FLANGE TYPE SIMILAR

INTAKE LOUVER DETAIL

N.T.S.

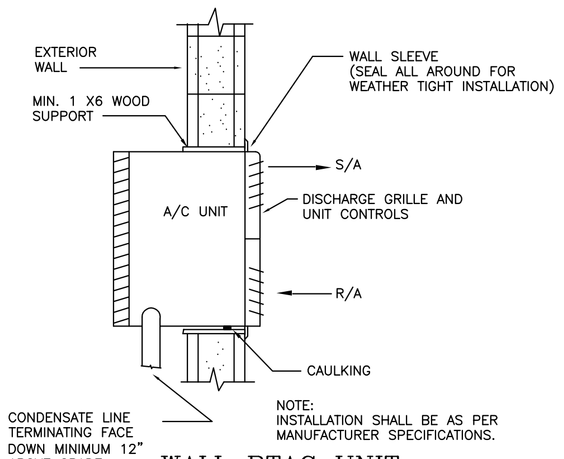

WALL PTAC UNIT MOUNTING DETAIL.

N.T.S.

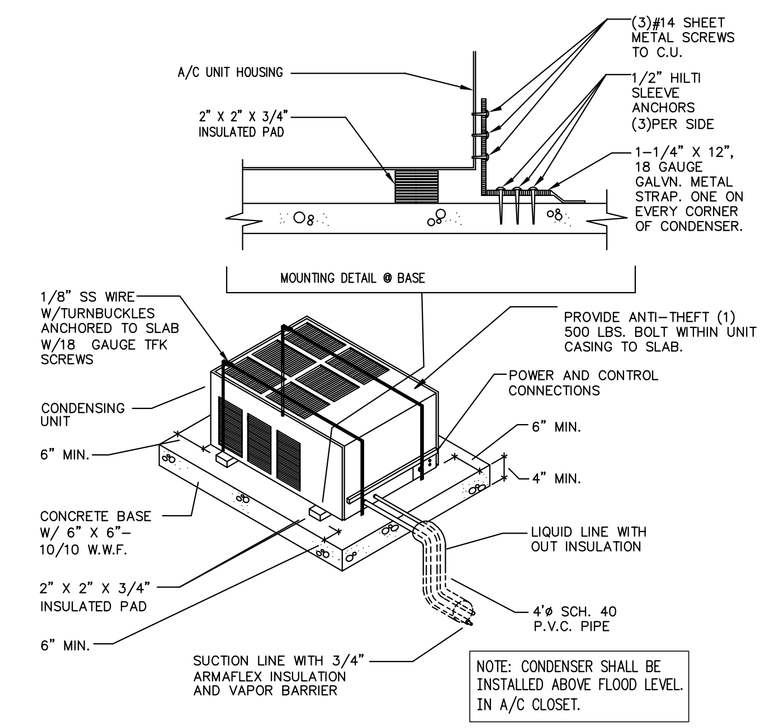

NOTE: CONCRETE SCREWS SHALL BE RATED FOR 500 LBS. MIN. PULL-OUT CAPACITY.

1 CONDENSING UNIT MOUNTING DETAIL

N.T.S.

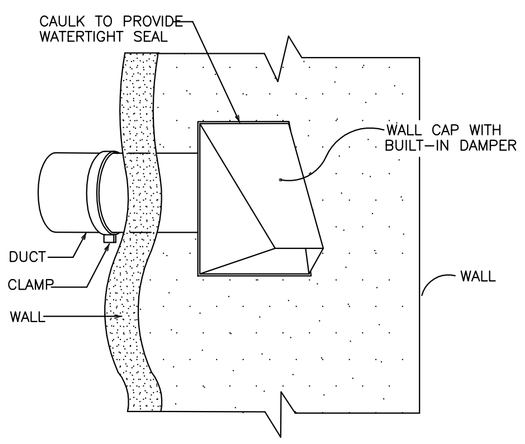

WALL CAP DETAIL

N.T.S.

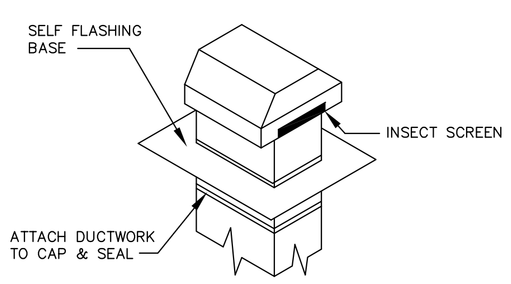

ROOF CAP DETAIL

N.T.S.

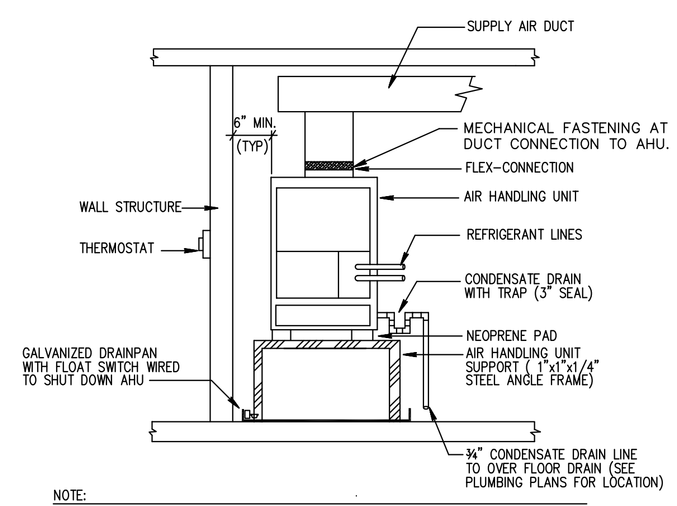

NOTE:

1. PROVIDE MINIMUM 6" SERVICE/ MAINTENANCE AREA AROUND AIR HANDLING UNIT.
2. PROVIDE FLOAT SWITCH IN DRAINPAN WIRED TO SHUT DOWN AC UNIT IN CASE OF CONDENSATE STOPPAGE.

TYPICAL VERTICAL AIR UNIT DETAIL

N.T.S.

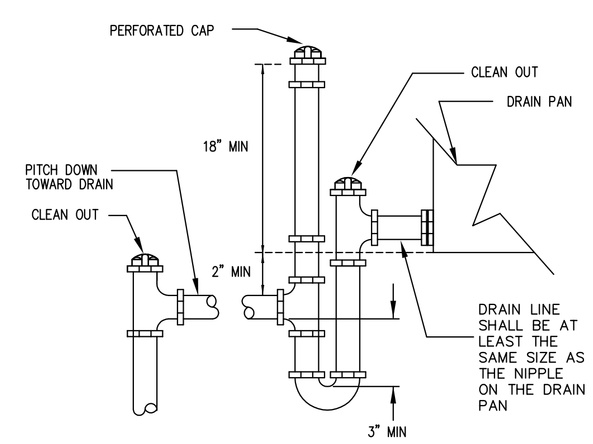

TRAP PIPE DIAMETER	A/C CAPACITY
3/4"ø	UP TO 2 TONS
1"ø	UP TO 5 TONS
1-1/4"ø	MORE THAN 5 TONS

TYPICAL CONDENSATE DRAIN TRAP

N.T.S.

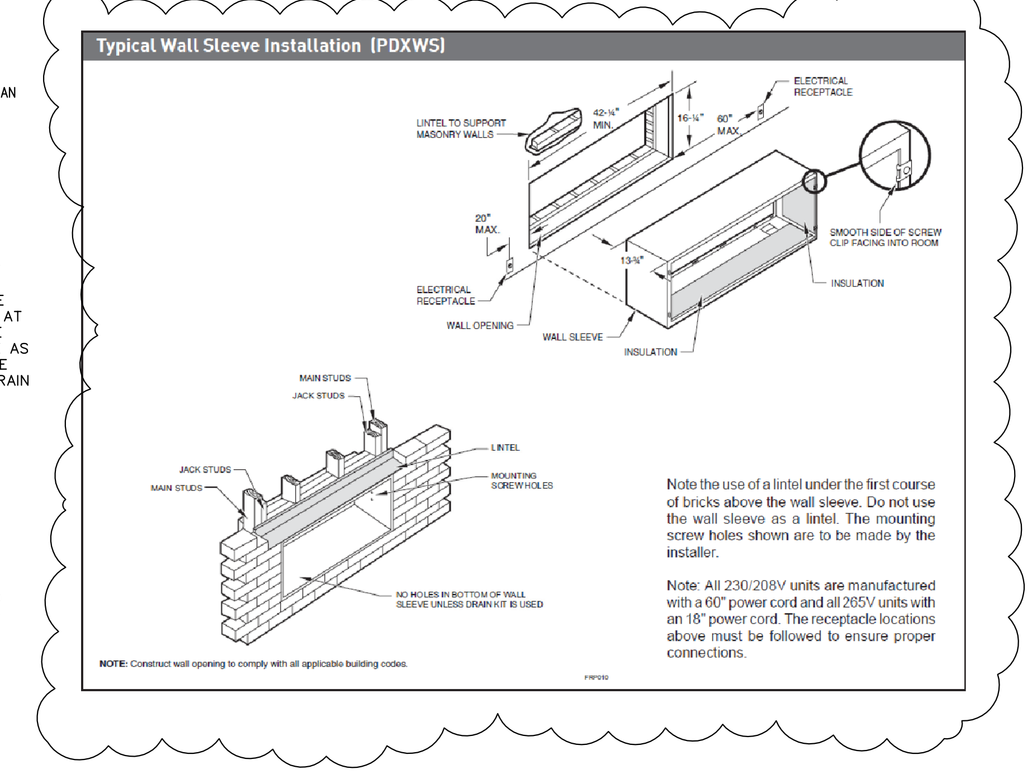

HVAC DETAILS PLAN

1 DETAILS PLAN

SCALE : N.T.S.

JOB # 15-0902

arpe engineering inc
Gables International Plaza
2655 Le Jeune Road, Suite 1109
Coral Gables, Florida 33134
Phone > 305 444 9809
Fax > 305 444 9827
Engineering Design:
> Mechanical > Electrical
> Plumbing > Fire Protection
www.arpe-eng.com
Amarilis Rodriguez, P.E.
License Number 60236
C.A. 26359
Signature
Date

CLIENT :

241 77 STREET

Issued for Permitting

241 77 street
Miami Beach, FL 33141

CDS CASTELLANOS DESIGN STUDIO
407 LINCOLN ROAD, SUITE 2C
MIAMI BEACH, FL 33139
Tel: 786.218.5335
License #AA 26002467
WWW.CASTELLANOSDESIGN.COM

No.	DATE	ISSUED / REVISED
1	17 FEB/15	PERMITTING
1	RTC 12-3-15	

ALL DRAWN AND WRITTEN MATERIAL CONTAINED HEREIN IS THE SOLE PROPERTY OF CASTELLANOS DESIGN STUDIO, LLC. AND MAY NOT BE DUPLICATED, PUBLISHED, DISCLOSED OR USED WITHOUT EXPRESS WRITTEN CONSENT OF CASTELLANOS DESIGN STUDIO, LLC.
THE DRAWINGS ARE SCOPE DOCUMENTS WHICH INDICATE THE GENERAL SCOPE OF WORK, AND SUCH, DO NOT NECESSARILY DESCRIBE ALL WORK REQUIRED FOR THE FULL PERFORMANCE AND COMPLETION OF THE WORK. GENERAL CONTRACTOR IS TO FURNISH AND INSTALL ALL ITEMS REQUIRED FOR THE PROPER COMPLETION OF ITS WORK WITHOUT ADJUSTMENT TO THE CONTRACT AMOUNT UNLESS SCOPE OF WORK CHANGES FROM THAT INDICATED ON THE DRAWINGS. IN THE EVENT OF A CONFLICT WITHIN OR AMONG THE CONTRACT DOCUMENTS, THAT DOCUMENT PLACING THE GREATEST BURDEN UPON GENERAL CONTRACTOR SHALL GOVERN. THE GENERAL CONTRACTOR SHALL CAREFULLY STUDY AND COMPARE ALL DRAWINGS, REPORTING ANY ERROR, INCONSISTENCY OR OMISSION HE MAY DISCOVER AND REPORT TO CDS AND IN NO CASE SHALL PROCEED IN UNCERTAINTY.

SEAL :

WESLEY ART CASTELLANOS
FLORIDA ARCHITECT LICENSE AR 96133

PROJECT NO : 2014-32

HVAC DETAILS PLAN

CHECKED BY :	SHEET NO :
DRAWN BY :	M-1.2
SCALE: AS NOTED	
© 2015 BY CDS	